THIS DRAWING IS UNPUBLISHED. RELEASED FOR PUBLICATION 20
© COPYRIGHT 20 BY TYCO ELECTRONICS CORPORATION. ALL RIGHTS RESERVED.

LOC	DIST
FX	00

REVISIONS

P	LTR	DESCRIPTION	DATE	DWN	APVD
	S10	REVISED PER ECO-09-009758	23APR2009	DLD	DCM
	S11	REVISED PER ECO-09-028550	29DEC2009	DLD	DCM

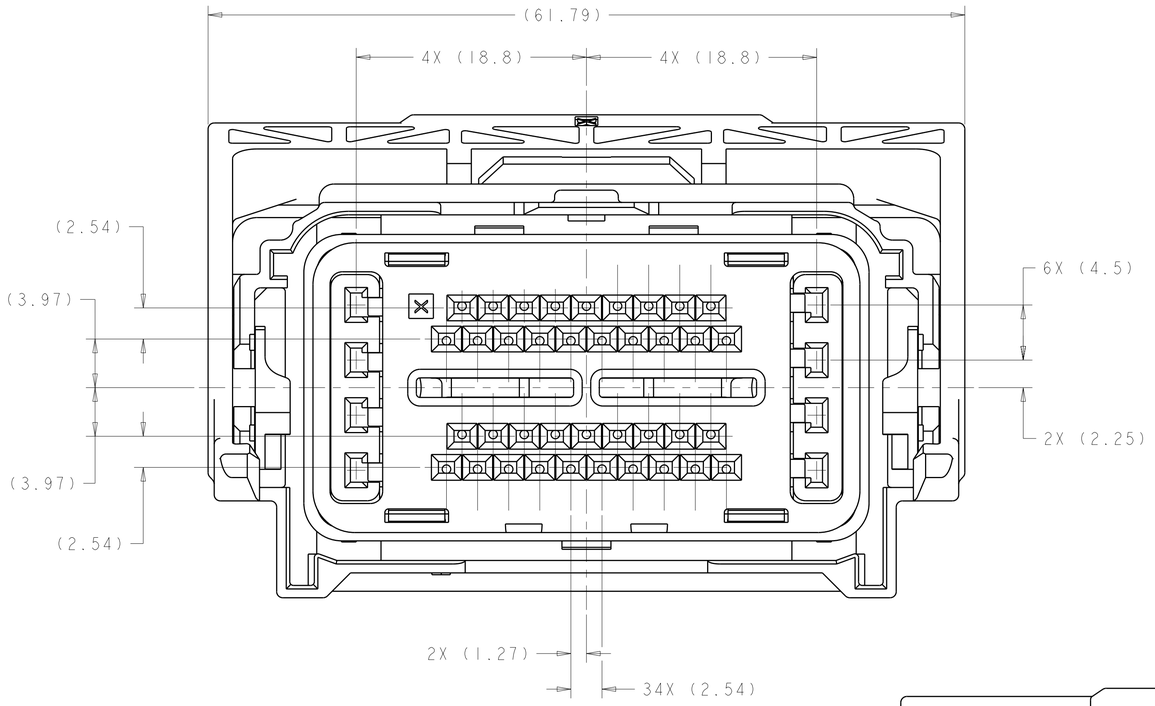

KEYING OPTION "A"
1438082-1 △3

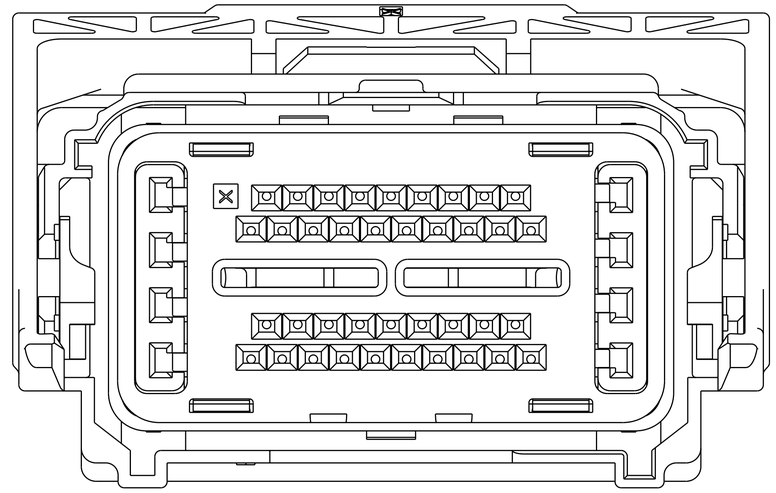

KEYING OPTION "B"
1438082-2 △3

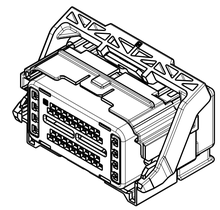

SCALE 1:1

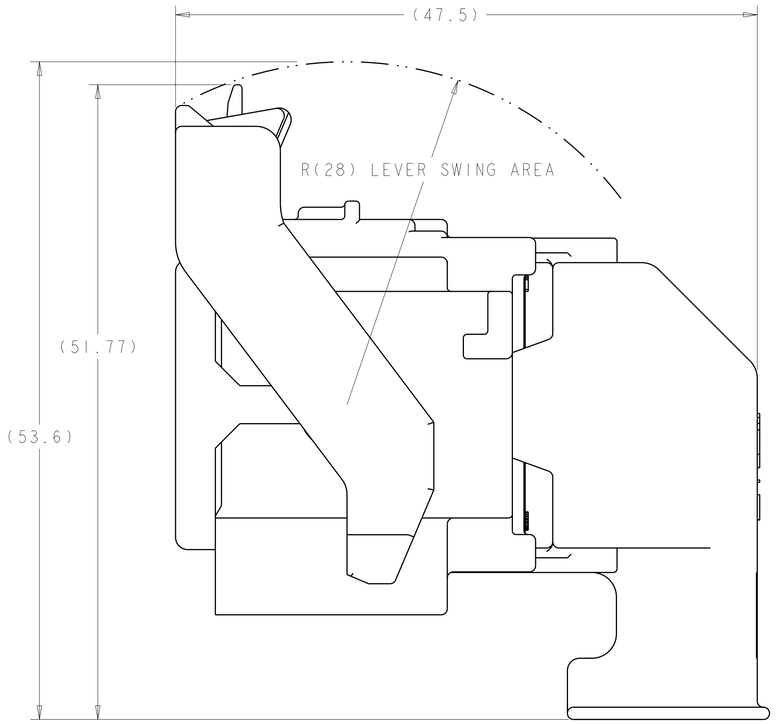

SHOWN WITH CAM LEVER AND SPACER
IN LOADED POSITION WITH
OPTIONAL WIRESHIELD

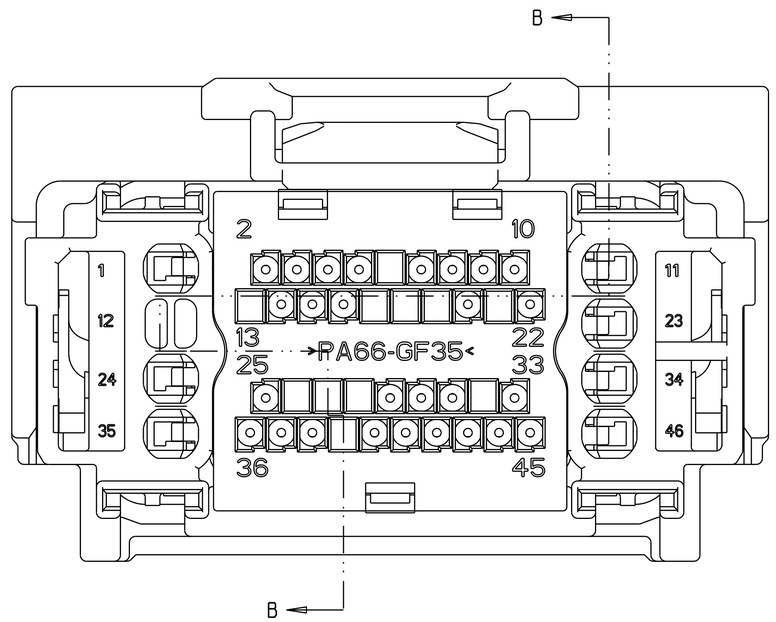

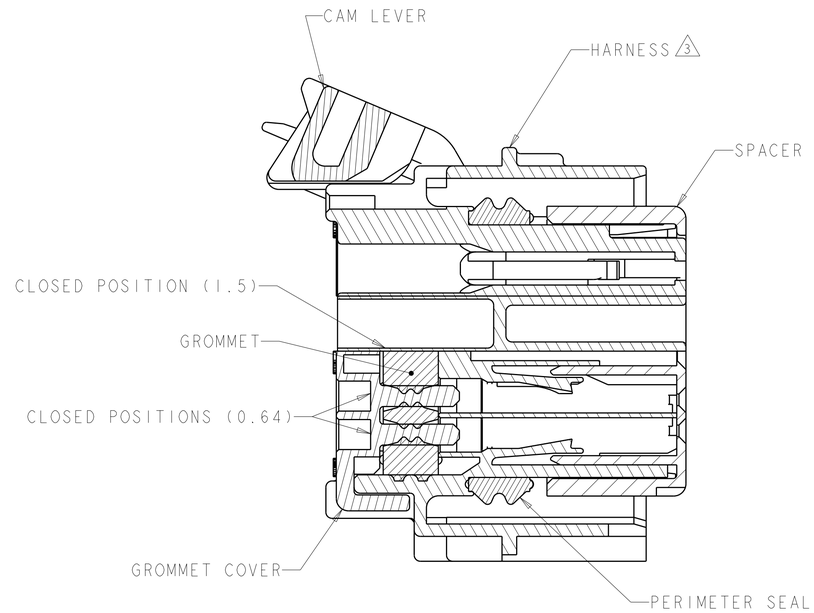

SECTION B-B

△1 MATERIAL:
HARNESS - 35% GLASS FILLED PA66, BLACK
ALT MAT'L: HARNESS - 30% GLASS FILLED sPS, BLACK
SPACER - 40% GLASS FILLED PPS+PA66, RED
ALT MAT'L: 30% GLASS FILLED sPS, RED
ALT MAT'L: 35% GLASS FILLED PA66, RED
COVER - 35% GLASS FILLED PA66, BLACK
ALT MAT'L: COVER - 30% GLASS FILLED LCP, BLACK
CAM LEVER - 35% GLASS FILLED NYLON, GRAY
GROMMET - SILICONE, BROWN
PERIMETER SEAL - SILICONE, GREEN

2. CAM LEVER AND SPACER ARE SHIPPED IN PRE-LATCH POSITION.

△3 SEE PINOUT CHART ON SHEETS 2, 3 AND 4 FOR CLOSED CIRCUIT CONFIGURATIONS.

△4 CAVITIES WITH A NUMERIC SYMBOL INDICATES CLOSED TERMINAL LOCATIONS.
BLANK CAVITIES INDICATE OPEN TERMINAL HOLE LOCATIONS.

△3 SEE PINOUT CHARTS

PART NUMBER

THIS DRAWING IS A CONTROLLED DOCUMENT FOR TYCO ELECTRONICS CORPORATION. IT IS SUBJECT TO CHANGE AND THE CONTROLLING ENGINEERING ORGANIZATION SHOULD BE CONTACTED FOR THE LATEST REVISION.

DWN	R VESTAL	01AUG2003
CHK	D STRAUSSER	01AUG2003
APVD	D STRAUSSER	01AUG2003

DIMENSIONS: mm

TOLERANCES UNLESS OTHERWISE SPECIFIED:
0 PLC ±-
1 PLC ±0.3
2 PLC ±0.10
3 PLC ±-
4 PLC ±-
ANGLES ±1°

MATERIAL: SEE TABLE
FINISH: SEE TABLE

PRODUCT SPEC: -
APPLICATION SPEC: -
WEIGHT: -

Tyco Electronics
Tyco Electronics
Harrisburg, PA 17105-3608

NAME: 46 WAY PCM CONNECTOR HARNESS ASSEMBLY

SIZE	CAGE CODE	DRAWING NO	RESTRICTED TO
A1	00779	C-1438082	-

CUSTOMER DRAWING | SCALE 4:1 | SHEET 1 OF 5 | REV S11

AMP 4805 REV 31MAR2000

Pro/ENGINEER DRAWING

THIS DRAWING IS UNPUBLISHED. RELEASED FOR PUBLICATION 20
© COPYRIGHT 20 BY TYCO ELECTRONICS CORPORATION. ALL RIGHTS RESERVED.

LOC	DIST
FX	00

REVISIONS

P	LTR	DESCRIPTION	DATE	DWN	APVD
	-	SEE SHEET 1	-	-	-

46	45	44	43	42	41	40	39	38	37	36	35	34	33	32	31	30	29	28	27	26	25	24	23	22	21	20	19	18	17	16	15	14	13	12	11	10	9	8	7	6	5	4	3	2	1	PART NUMBER	FORD PART NUMBER
	45		43				39		37	36	35				31							24						18	17	16		14	13	12			9		7	6				2	1	9-1438082-7	2LIT-14A464-SD-051
				42																						20		18			15	14			11	10		8	7			4	3	2	1	9-1438082-6	2LIT-14A464-SD-050
				42																						20		18							11	10									1	9-1438082-5	2LIT-14A464-SD-049
				42																						20		18							11	10								2	1	9-1438082-4	2LIT-14A464-SD-048
											35								27																												9-1438082-3	2LIT-14A464-SD-047
	45		43							36	35			32	31							24			21		19	18	17	16		14		12					7	6					1	9-1438082-1	2LIT-14A464-SD-046
46															31																																9-1438082-0	2LIT-14A464-SD-045
															31							24								16							8					3	2		8-1438082-9	2LIT-14A464-SD-044
																			27																												8-1438082-8	2LIT-14A464-SD-043
	45	44	43	42		40		38	37	36			33		31		29					24		22		20		18	17	16	15						9	8				3			8-1438082-7	2LIT-14A464-SD-042
	45	44	43	42		40		38	37	36			33		31		29					24		22	21	20	19	18	17	16	15						9	8		6			2		8-1438082-6	2LIT-14A464-SD-041
46															31																						9			6			3		8-1438082-5	2LIT-14A464-SD-040
			43	42			39		37																	20	19	18							11	10	9							2	1	8-1438082-4	2LIT-14A464-SD-039
			43												31		29											18																		8-1438082-3	2LIT-14A464-SD-038
	45	44	43	42		40		38	37	36			33		31		29					24		22	21	20		18	17	16	15						9	8					2		8-1438082-0	2LIT-14A464-SD-037
	45		43							36	35				31							24								16		14		12					7	6				2	1	7-1438082-9	2LIT-14A464-SD-036
	45		43							36	35				31							24			21		19			16		14		12					7	6				2	1	7-1438082-8	2LIT-14A464-SD-035
			43	42			39	38	37					32				28									19	18	17	16						10	9									7-1438082-5	2LIT-14A464-SD-034
	45	44	43	42		40		38	37	36			33		31		29					24		22	21	20		18	17	16	15						9	8		6			2		7-1438082-4	2LIT-14A464-SD-033
	45	44	43	42		40		38	37	36			33		31							24		22	21	20		18	17	16	15						9	8		6			2		7-1438082-3	2LIT-14A464-SD-032
						40											29																				9								6-1438082-6	2LIT-14A464-SD-031
																			27															12							6					6-1438082-3	2LIT-14A464-SD-030
																			27																						6		4				6-1438082-2	2LIT-14A464-SD-029
																			27																						6						6-1438082-1	2LIT-14A464-SD-028
																	29	28			25				21			18		16											6	5					5-1438082-6	2LIT-14A464-SD-027
																	29	28			25				21					16											6	5					5-1438082-5	2LIT-14A464-SD-026
																30	29								21			18		16												5					5-1438082-2	2LIT-14A464-SD-025
			43	42			39		37																	20	19	18	17		15	14			11	10	9	8	7			4	3	2	1	5-1438082-0	2LIT-14A464-SD-024
				42																											15	14			11	10	9	8	7			4	3		1	4-1438082-9	2LIT-14A464-SD-023
			43	42			39		37																	20	19	18	17						11	10	9							2	1	4-1438082-8	2LIT-14A464-SD-022
				42																															11	10	9								1	4-1438082-7	2LIT-14A464-SD-021
			43	42			39		37														23			20	19	18	17						11	10	9							2		4-1438082-2	2LIT-14A464-SD-020
	45		43							36	35				31							24						18	17	16		14		12					7	6				2	1	4-1438082-0	2LIT-14A464-SD-019
			43	42			39		37														23			20	19	18	17		15	14			11	10	9	8	7			4	3	2		3-1438082-8	2LIT-14A464-SD-018
				42																			23								15	14			11	10	9	8	7			4	3			3-1438082-7	2LIT-14A464-SD-017
			43	42			39		37														23			20	19	18	17	16					11	10	9							2		3-1438082-6	2LIT-14A464-SD-016
				42																			23												11	10	9									3-1438082-5	2LIT-14A464-SD-015
	45		43				39		37	36	35				31							24			21		19	18	17	16		14	13	12			9		7	6				2	1	3-1438082-4	2LIT-14A464-SD-014
	45		43				39		37	36	35		33		31						25	24			21		19	18	17	16		14	13	12			9		7	6				2	1	3-1438082-3	2LIT-14A464-SD-013
	45		43							36	35				31							24			21		19	18	17	16		14		12					7	6				2	1	3-1438082-2	2LIT-14A464-SD-012
				42																											15	14	13			10	9	8	7			4	3			3-1438082-1	2LIT-14A464-SD-011
			43	42			39		37																	20	19	18	17				13			10	9							2		3-1438082-0	2LIT-14A464-SD-010
				42																													13			10	9									2-1438082-9	2LIT-14A464-SD-009
			43	42			39		37																	20	19	18	17		15	14	13			10	9	8	7			4	3	2		2-1438082-5	2LIT-14A464-SD-008
	45						39		37	36	35		33								25	24			21		19	18	17	16		14	13	12			9		7	6				2	1	2-1438082-3	2LIT-14A464-SD-007
	45						39		37	36	35											24			21		19	18	17	16		14	13	12			9		7	6				2	1	2-1438082-2	2LIT-14A464-SD-006
	45									36	35		33								25	24			21		19	18	17	16		14		12					7	6				2	1	1-1438082-9	2LIT-14A464-SD-005
	45									36	35											24			21		19	18	17	16		14		12					7	6				2	1	1-1438082-8	2LIT-14A464-SD-004
	45										35											24			21		19	18	17	16		14		12					7	6				2	1	1-1438082-1	2LIT-14A464-SD-003
																	29	28							21					16											5					1438082-6	2LIT-14A464-SD-002
											35											24			21		19	18	17					12							6					1	1438082-5	2LIT-14A464-SD-001
																																														1438082-1	2LIT-14A464-SD-000

TERMINAL HOLE POSITION

PIN-OUT CHART KEYING OPTION "A" 4

THIS DRAWING IS A CONTROLLED DOCUMENT FOR TYCO ELECTRONICS CORPORATION. IT IS SUBJECT TO MANDATORY COMPLIANCE BY ALL WITHIN THIS ORGANIZATION. SHOULD BE CONTACTED FOR THE LATEST REVISION.

DIMENSIONS: mm

TOLERANCES UNLESS OTHERWISE SPECIFIED:
0 PLC ±-
1 PLC ±0.3
2 PLC ±0.10
3 PLC ±-
4 PLC ±-
ANGLES ±1°

MATERIAL - - -
FINISH - - -

DWN R. VESTAL 01AUG2003
CHK D. STRAUSSER 01AUG2003
APVD D. STRAUSSER 01AUG2003
PRODUCT SPEC -
APPLICATION SPEC -
WEIGHT -

Tyco Electronics
Tyco Electronics
Harrisburg, PA 17105-3608

NAME
46 WAY PCM CONNECTOR HARNESS ASSEMBLY

SIZE	CAGE CODE	DRAWING NO	RESTRICTED TO
A1	00779	C-1438082	-

CUSTOMER DRAWING | SCALE 4:1 | SHEET 2 OF 5 | REV S11

THIS DRAWING IS UNPUBLISHED. RELEASED FOR PUBLICATION 20
© COPYRIGHT 20 BY TYCO ELECTRONICS CORPORATION. ALL RIGHTS RESERVED.

LOC	DIST
FX	00

REVISIONS

P	LTR	DESCRIPTION	DATE	DWN	APVD
	-	SEE SHEET 1	-	-	-

46	45	44	43	42	41	40	39	38	37	36	35	34	33	32	31	30	29	28	27	26	25	24	23	22	21	20	19	18	17	16	15	14	13	12	11	10	9	8	7	6	5	4	3	2	1	PART NUMBER	FORD PART NUMBER
		44									35			32										22										12			9		7	6						1	6-1438735-7	2LIT-14A464-SD-086
		44									35			32																				12			9		7	6						1	6-1438735-3	2LIT-14A464-SD-085
											35																																				6-1438735-2	2LIT-14A464-SD-084
			43	42		40	39		37								29									20		18			15	14			11	10	9	8	7			4	3		1	6-1438735-1	2LIT-14A464-SD-083
	45		43					38		36					31						25	24						18	17	16		14		12					7	6				2	1	5-1438735-0	2LIT-14A464-SD-082
	45		43					38		36					31						25	24								16		14		12					7	6				2	1	4-1438735-9	2LIT-14A464-SD-081
	45		43					38		36				32	31						25	24			21		19	18	17	16		14		12					7	6						1	4-1438735-8	2LIT-14A464-SD-080
	45		43				39	38	37	36					31						25	24						18	17	16		14	13	12			9		7	6					2	1	4-1438735-7	2LIT-14A464-SD-079
				42																						20		18					13		11	10									2	1	3-1438735-8	2LIT-14A464-SD-078
				42																						20		18					13		11	10										1	3-1438735-7	2LIT-14A464-SD-077
	45		43				39	38	37	36					31						25	24			21	20	19	18	17			14	13	12			9								2	1	3-1438735-6	2LIT-14A464-SD-076
	45		43					38		36					31						25	24			21	20	19	18	17			14		12											2	1	3-1438735-5	2LIT-14A464-SD-075
			43	42		40	39		37								29									20		18			15	14			11	10	9	8	7			4	3	2	1	3-1438735-3	2LIT-14A464-SD-074
	45		43				39	38	37	36					31						25	24				20	19	18	17			14	13	12			9								2	1	3-1438735-2	2LIT-14A464-SD-073
	45		43					38		36					31						25	24			21	20	19	18	17	16		14		12					7						2	1	3-1438735-1	2LIT-14A464-SD-072
	45		43				39	38	37	36					31						25	24			21	20	19	18	17	16		14	13	12			9		7						2	1	3-1438735-0	2LIT-14A464-SD-071
	45		43					38		36					31						25	24			21	20	19			16		14		12					7						2	1	2-1438735-9	2LIT-14A464-SD-070
	45		43				39	38	37	36					31						25	24			21	20	19			16		14	13	12			9		7						2	1	2-1438735-8	2LIT-14A464-SD-069
	45		43					38		36					31						25	24				20	19	18	17			14		12											2	1	2-1438735-6	2LIT-14A464-SD-068
													33																				13								6	5					2-1438735-5	2LIT-14A464-SD-067
	45	44	43	42		40		38	37	36			33		31							24		22	21	20		18	17	16	15						9	8							2		2-1438735-4	2LIT-14A464-SD-066
			43												31		29											18										8							2		2-1438735-1	2LIT-14A464-SD-065
	45		43					38		36	35				31						25	24			21					16		14		12					7	6				2	1	2-1438735-0	2LIT-14A464-SD-064
	45		43				39	38	37	36	35				31						25	24						18	17	16		14	13	12			9		7	6				2	1	1-1438735-9	2LIT-14A464-SD-063
	45		43					38		36	35			32	31						25	24			21		19	18	17	16		14		12					7	6						1	1-1438735-8	2LIT-14A464-SD-062
	45		43					38		36	35				31						25	24								16		14		12					7	6				2	1	1-1438735-7	2LIT-14A464-SD-061
	45		43					38		36	35				31						25	24			21		19			16		14		12					7	6				2	1	1-1438735-6	2LIT-14A464-SD-060
	45		43					38		36	35				31						25	24						18	17	16		14		12					7	6				2	1	1-1438735-5	2LIT-14A464-SD-059
	45		43				39	38	37	36	35				31						25	24			21		19	18	17	16		14	13	12			9		7	6				2	1	1-1438735-4	2LIT-14A464-SD-058
	45		43					38		36	35				31						25	24			21		19	18	17	16		14		12					7	6				2	1	1-1438735-3	2LIT-14A464-SD-057
				42					37																	20		18			15	14			11	10	9	8	7			4	3	2	1	1-1438735-2	2LIT-14A464-SD-056
	45		43							36	35				31							24			21		19			16		14		12					7	6						1	1-1438735-1	2LIT-14A464-SD-055
											35								27																									3			1-1438735-0	2LIT-14A464-SD-054
			43												31		29											18									9	8							2		1438735-9	2LIT-14A464-SD-053
											35								27																				7								1438735-8	2LIT-14A464-SD-052

TERMINAL HOLE POSITION

PIN-OUT CHART KEYING OPTION "A" (4)

THIS DRAWING IS A CONTROLLED DOCUMENT FOR TYCO ELECTRONICS CORPORATION. IT IS SUBJECT TO CHANGE AND THE CONTROLLING ENGINEERING ORGANIZATION SHOULD BE CONTACTED FOR THE LATEST REVISION.

DIMENSIONS: mm

TOLERANCES UNLESS OTHERWISE SPECIFIED:
0 PLC ±-
1 PLC ±0.3
2 PLC ±0.10
3 PLC ±-
4 PLC ±-
ANGLES ±3°

MATERIAL - -
FINISH - -

DWN	R. VESTAL	01AUG2003
CHK	D. STRAUSSER	01AUG2003
APVD	D. STRAUSSER	01AUG2003
PRODUCT SPEC	-	
APPLICATION SPEC	-	
WEIGHT	-	

Tyco Electronics
Tyco Electronics
Harrisburg, PA 17105-3608

NAME: 46 WAY PCM CONNECTOR HARNESS ASSEMBLY

SIZE	CAGE CODE	DRAWING NO	RESTRICTED TO
A1	00779	C-1438082	-

CUSTOMER DRAWING

SCALE	SHEET	OF	REV
4:1	3	5	S11

THIS DRAWING IS UNPUBLISHED. RELEASED FOR PUBLICATION 20
© COPYRIGHT 20 BY TYCO ELECTRONICS CORPORATION. ALL RIGHTS RESERVED.

LOC	DIST
FX	00

REVISIONS

P	LTR	DESCRIPTION	DATE	DWN	APVD
	-	SEE SHEET 1	-	-	-

46	45	44	43	42	41	40	39	38	37	36	35	34	33	32	31	30	29	28	27	26	25	24	23	22	21	20	19	18	17	16	15	14	13	12	11	10	9	8	7	6	5	4	3	2	1	PART NUMBER	FORD PART NUMBER
		44	43	42	41			38												26																			7		5					9-1438082-9	2LIT-14A464-TD-044
		44						38												26																			7							9-1438082-8	2LIT-14A464-TD-043
						40	39	38			35	34										24			21			18		16	15		13	12			9	8	7		5					9-1438082-2	2LIT-14A464-TD-042
46			43	42		40					35	34			31			28				24			21		19							12			9				5	4			1	8-1438082-2	2LIT-14A464-TD-041
						40	39	38			35	34										24			21			18		16	15		13	12				8	7		5					8-1438082-1	2LIT-14A464-TD-040
											35								27																		9			6			3			7-1438082-7	2LIT-14A464-TD-039
			43	42			39	38	37					32				28									19	18	17	16							10	9								7-1438082-6	2LIT-14A464-TD-038
			43	42		40					35							28				24			21		19							12								5	4			1	7-1438082-2	2LIT-14A464-TD-037
			43	42							35											24			21		19							12								5	4			1	7-1438082-1	2LIT-14A464-TD-036
			43	42			39	38	37									28									19	18	17	16			13			10	9									7-1438082-0	2LIT-14A464-TD-035
			43	42			39	38	37									28									19	18	17	16						10	9									6-1438082-9	2LIT-14A464-TD-034
		44		42				38												26																			7								6-1438082-8	2LIT-14A464-TD-033
			43	42			39	38	37					32				28									19	18	17	16			13			10	9									6-1438082-7	2LIT-14A464-TD-032
		44		42				38											27	26				22																							6-1438082-5	2LIT-14A464-TD-031
		44		42				38												26																											6-1438082-4	2LIT-14A464-TD-030
			43	42				38	37					32													19	18	17	16						10	9									6-1438082-0	2LIT-14A464-TD-029
			43	42			39	38	37					32													19	18	17	16			13			10	9									5-1438082-9	2LIT-14A464-TD-028
			43	42				38	37					32													19	18	17	16						10	9									5-1438082-8	2LIT-14A464-TD-027
			43	42			39	38										28									19	18	17	16						10	9									5-1438082-7	2LIT-14A464-TD-026
46	45		43									34	33	32	31				27					22	21	20	19	18		16	15	14	13	12		10	9	8	7						1	5-1438082-4	2LIT-14A464-TD-025
		44		42				38																																			3			5-1438082-3	2LIT-14A464-TD-024
						40	39				35	34													21			18		16	15		13				9	8	7							5-1438082-1	2LIT-14A464-TD-023
46	45	44	43		41	40						34	33	32	31		29		27					22	21	20	19	18		16	15	14	13	12		10	9	8	7						1	4-1438082-6	2LIT-14A464-TD-022
		44		42				38								30			27	26				22																							4-1438082-5	2LIT-14A464-TD-021
		44		42				38								30																											3			4-1438082-4	2LIT-14A464-TD-020
		44		42				38								30				26																											4-1438082-3	2LIT-14A464-TD-019
46	45		43									34	33	32	31				27						21	20	19	18		16	15	14	13	12		10	9	8	7						1	4-1438082-1	2LIT-14A464-TD-018
						40	39				35	34													21			18		16	15		13				9	8	7		5					3-1438082-9	2LIT-14A464-TD-017
		44		42				38	37							30			27	26				22													9									2-1438082-8	2LIT-14A464-TD-016
		44		42				38	37							30																					9									2-1438082-7	2LIT-14A464-TD-015
		44		42				38	37							30				26																	9									2-1438082-6	2LIT-14A464-TD-014
			43	42			39	38	37				33	32				28	27	26				22	21	20	19	18	17	16			13			10										2-1438082-4	2LIT-14A464-TD-013
46	45	44	43									34	33	32	31				27					22	21	20	19	18			15	14	13	12		10	9	8	7						1	2-1438082-1	2LIT-14A464-TD-012
46	45	44	43									34	33	32	31				27					22	21	20	19	18		16	15	14	13	12		10	9	8	7						1	2-1438082-0	2LIT-14A464-TD-011
			43	42			39	38	37									28									19	18	17	16						10										1-1438082-7	2LIT-14A464-TD-010
			43	42			39	38	37					32				28	27	26					21	20	19	18	17	16			13			10										1-1438082-6	2LIT-14A464-TD-009
			43	42			39	38	37					32				28									19	18	17	16			13			10										1-1438082-5	2LIT-14A464-TD-008
			43	42				38	37					32													19	18	17	16						10										1-1438082-4	2LIT-14A464-TD-007
46	45	44	43									34	33	32	31				27					22	21	20	19	18			15	14	13	12		10	9	8	7						1	1-1438082-3	2LIT-14A464-TD-006
46	45	44	43									34	33	32	31				27					22	21	20	19	18		16	15	14	13	12		10	9	8	7						1	1-1438082-2	2LIT-14A464-TD-005
			43	42			39	38										28										18	17	16						10										1438082-9	2LIT-14A464-TD-004
														32																																	1438082-8	2LIT-14A464-TD-003
												34	33	32	31				27					22	21	20	19	18		16	15	14	13	12		10	9	8	7						1	1438082-7	2LIT-14A464-TD-002
												34	33	32	31				27					22	21	20	19	18			15	14	13	12		10	9	8	7						1	1-1438082-0	2LIT-14A464-TD-001
																																														1438082-2	2LIT-14A464-TD-000
TERMINAL HOLE POSITION																																															

PIN-OUT CHART KEYING OPTION "B" (4)

THIS DRAWING IS A CONTROLLED DOCUMENT FOR TYCO ELECTRONICS CORPORATION. IT IS SUBJECT TO CHANGE AND THE CONTROLLING ENGINEERING ORGANIZATION SHOULD BE CONTACTED FOR THE LATEST REVISION.

DIMENSIONS: mm

TOLERANCES UNLESS OTHERWISE SPECIFIED:
0 PLC ±-
1 PLC ±0.3
2 PLC ±0.10
3 PLC ±-
4 PLC ±-
ANGLES ±1°

MATERIAL - -

FINISH - -

DWN R. VESTAL 01AUG2003
CHK D. STRAUSSER 01AUG2003
APVD D. STRAUSSER 01AUG2003

PRODUCT SPEC -

APPLICATION SPEC -

WEIGHT -

CUSTOMER DRAWING

Tyco Electronics
Tyco Electronics
Harrisburg, PA 17105-3608

NAME
46 WAY PCM
CONNECTOR HARNESS ASSEMBLY

SIZE	CAGE CODE	DRAWING NO	RESTRICTED TO
A1	00779	C-1438082	-

SCALE 4:1 SHEET 4 OF 5 REV S11

THIS DRAWING IS UNPUBLISHED. RELEASED FOR PUBLICATION 20
© COPYRIGHT 20 BY TYCO ELECTRONICS CORPORATION. ALL RIGHTS RESERVED.

LOC	DIST
FX	00

REVISIONS

P	LTR	DESCRIPTION	DATE	DWN	APVD
	-	SEE SHEET 1	-	-	-

46	45	44	43	42	41	40	39	38	37	36	35	34	33	32	31	30	29	28	27	26	25	24	23	22	21	20	19	18	17	16	15	14	13	12	11	10	9	8	7	6	5	4	3	2	1	PART NUMBER	FORD PART NUMBER
	45	44	43	42	41			38											27								19												7		5						7-1438735-7	2LIT-14A464-TD-086
		44		42				38											27																				7		5						7-1438735-6	2LIT-14A464-TD-085
	45	44	43	42	41			38																			19												7		5	4					7-1438735-5	2LIT-14A464-TD-084
		44		42				38																			19												7		5	4					7-1438735-4	2LIT-14A464-TD-083
		44	43	42	41			38																															7		5	4					7-1438735-3	2LIT-14A464-TD-082
		44		42				38											27					22															7		5	4					7-1438735-2	2LIT-14A464-TD-081
		44		42				38																															7		5	4					7-1438735-1	2LIT-14A464-TD-080
			43	42																26																			7	6		4	3				7-1438735-0	2LIT-14A464-TD-079
																				26																			7	6			3				6-1438735-9	2LIT-14A464-TD-078
		44	43	42																26							19												7	6		4					6-1438735-8	2LIT-14A464-TD-077
	45	44	43	42	41			38																			19												7		5						6-1438735-6	2LIT-14A464-TD-076
		44		42				38																			19												7		5						6-1438735-5	2LIT-14A464-TD-075
		44	43	42	41			38																			19												7		5						6-1438735-4	2LIT-14A464-TD-074
		44						38											27					22			19											8		6						6-1438735-0	2LIT-14A464-TD-073
		44						38											27					22			19											8	7	6						5-1438735-9	2LIT-14A464-TD-072
		44																		26				22			19													6						5-1438735-8	2LIT-14A464-TD-071
		44																		26				22			19												7	6						5-1438735-7	2LIT-14A464-TD-070
		44						38											27	26				22			19													6						5-1438735-6	2LIT-14A464-TD-069
		44						38											27	26				22			19												7	6						5-1438735-5	2LIT-14A464-TD-068
		44																		26							19												7	6						5-1438735-4	2LIT-14A464-TD-067
		44																		26							19													6						5-1438735-3	2LIT-14A464-TD-066
			43	42																26																			7	6		4					5-1438735-2	2LIT-14A464-TD-065
																				26																			7	6							5-1438735-1	2LIT-14A464-TD-064
		44		42				38											27					22															7		5						4-1438735-6	2LIT-14A464-TD-063
		44		42				38																															7		5						4-1438735-5	2LIT-14A464-TD-062
		44		42				38											27	26				22			19											8		6						4-1438735-4	2LIT-14A464-TD-061
		44		42				38											27	26				22			19											8	7	6						4-1438735-3	2LIT-14A464-TD-060
		44																		26							19											8	7	6						4-1438735-2	2LIT-14A464-TD-059
		44																		26							19											8		6						4-1438735-1	2LIT-14A464-TD-058
			43	42																26																			8	7	6	5					4-1438735-0	2LIT-14A464-TD-057
																				26																			8	7	6						3-1438735-9	2LIT-14A464-TD-056
46	45	44	43									34	33	32	31				27		25					20				16		14	13	12		10	9	8	7	6						1	3-1438735-4	2LIT-14A464-TD-055
46	45		43									34	33	32	31				27		25					20				16		14	13	12		10	9	8	7	6						1	2-1438735-7	2LIT-14A464-TD-054
46	45	44	43	42		40					35	34	33	32	31			28				24			21		19							12			9				5	4			1	2-1438735-3	2LIT-14A464-TD-053
	45	44	43	42		40							33	32	31			28							21		19										9				5	4				2-1438735-2	2LIT-14A464-TD-052
		44		42				38											27	26				22															7		5						1438735-7	2LIT-14A464-TD-051
						40	39	38			35	34										24			21			18					13	12			9	8	7		5						1438735-6	2LIT-14A464-TD-050
		44		42				38											27	26				22																	5						1438735-5	2LIT-14A464-TD-049
		44		42				38												26				22																	5						1438735-4	2LIT-14A464-TD-048
		44		42				38												26																			7		5						1438735-3	2LIT-14A464-TD-047
		44		42				38												26																					5						1438735-2	2LIT-14A464-TD-046
		44						38									29	28		26																			7				3				1438735-1	2LIT-14A464-TD-045
TERMINAL HOLE POSITION																																															

PIN-OUT CHART KEYING OPTION "B" △4

THIS DRAWING IS A CONTROLLED DOCUMENT FOR TYCO ELECTRONICS CORPORATION. IT IS SUBJECT TO CHANGE AND THE CONTROLLING ENGINEERING ORGANIZATION SHOULD BE CONTACTED FOR THE LATEST REVISION.

DIMENSIONS: mm

TOLERANCES UNLESS OTHERWISE SPECIFIED:
0 PLC ±-
1 PLC ±0.3
2 PLC ±0.10
3 PLC ±-
4 PLC ±-
ANGLES ±1°

MATERIAL: SEE TABLE -
FINISH: SEE TABLE -

DWN A. HOLT 22OCT2007
CHK S. MANKARYOS 22OCT2007
APVD S. MANKARYOS 22OCT2007
PRODUCT SPEC -
APPLICATION SPEC -
WEIGHT -

Tyco Electronics
Tyco Electronics
Harrisburg, PA 17105-3608

NAME: 46 WAY PCM CONNECTOR HARNESS ASSEMBLY

SIZE	CAGE CODE	DRAWING NO	RESTRICTED TO
A1	00779	C-1438082	-

CUSTOMER DRAWING

SCALE	SHEET	OF	REV
4:1	5	5	S11

Mouser Electronics

Authorized Distributor

Click to View Pricing, Inventory, Delivery & Lifecycle Information:

TE Connectivity:

3-1438735-3