TABLE OF CONTENTS

SHEET NO.	SHEET DESCRIPTION
1	NOTES AND BOM
2	CONFIGURATIONS
3-4	KEY CONFIGURATIONS
5	BLADE SEALED ASSEMBLY
6	SYSTEM PACKAGING
7	BACKSHELL NOTES
8	BACKSHELL
9	BACKSHELL CONFIGURATIONS

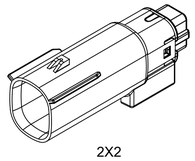

2X2

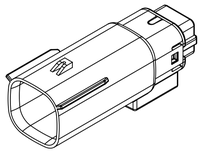

2X3

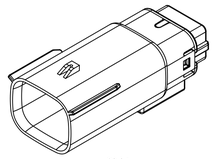

2X4

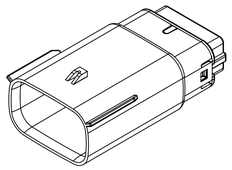

2X6

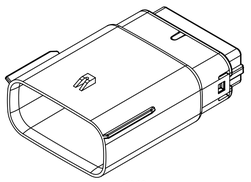

2X8

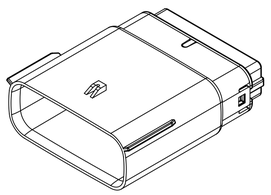

2X10

NOTES: VALID UNLESS OTHERWISE SPECIFIED

1. GENERAL:
a. APPLICATION SPECIFICATION SEE: AS-33472-100
-CONTAINS: PRODUCT INTRODUCTION, PRODUCT SUMMARY, CONNECTOR ASSEMBLY, PACKAGING INFORMATION, CONNECTOR MATING, SERVICE INSTRUCTIONS, ELECTRICAL CONTINUITY CHECKING, CRIMPING, AND TROUBLESHOOTING.
-DESIGNED TO MATE WITH RECEPTACLE SEALED ASSEMBLY AS SPECIFIED IN THE MATING CONNECTOR DRAWINGS CHART.
*DENOTES DRAWINGS THAT CAN BE ACCESSED AT <http://ewcap.uscarteams.org/>.
-ASSEMBLY SHIPPED WITH PLR IN PRE-LOCK POSITION (SEE PLR PRE-LOCK VIEW SHEET 5).

b. PRODUCT SPECIFICATION SEE:
-STANDARD CONFIGURATION: PS-33472-000
-UL V0 CONFIGURATION: TBD
CONTAINS: PRODUCT INTRODUCTION, PRODUCT SUMMARY, RATINGS (CURRENT, TEMPERATURE, SEALING, AND FLAMMABILITY), TERMINALS, WIRE DIAMETER RANGE, PRODUCT VALIDATION, AND PRODUCT DEVIATIONS.
c. PACKAGING SPECIFICATION PER MOLEX DRAWING: PK-31300-635
d. PARTS MUST BE IN COMPLIANCE TO MOLEX CHEMICAL SUBSTANCES FOR PRODUCTS AND PACKAGING SPECIFICATION: QEHS-699000-300
e. DATA MUST BE SUBMITTED UNDER THE MOLEX PART NUMBER TO IMDS (COMPANY ID#13255)

2. DESIGN - MATERIALS:
a. FOR BILL OF MATERIALS SEE:
-STANDARD CONFIGURATION: SD-33482-0002
-UL V0 CONFIGURATION: SD-160084-0002

3. DESIGN - GEOMETRY:
a. THE 3-D CAD DATA IS BASIC (WITHOUT TOLERANCE) AND MASTER FOR THIS PART WITH THE EXCEPTION OF UNDERLINED DIMENSIONS. DIMENSIONAL INFORMATION NOT SHOWN ON THIS DRAWING IS DEFINED BY THE DATA FILE AT ITS LATEST REVISION.
b. GEOMETRIC DIMENSIONS AND TOLERANCES PER ASME Y14.5M-2009
c. EDGES AND UNDIMENSIONED DETAILS PER ISO13715
d. CORNERS SHOWN AS SHARP TO BE R 0.2 MAX.
e. LETTERING SHALL BE 0.15 MAX RAISED IN 0.25 MAX RECESS PAD. THIS INCLUDES RECYCLING CODE, CAVITY ID, VENDOR IDENTIFICATION, AND CUSTOMER MATERIAL NUMBER.
f. VISUAL DEFECTS SHALL MEET COSMETIC STANDARD PS-45499-002 (Class B).
g. LASER MARKING:
1. PART NUMBER
2. DAY OF THE YEAR
3. SHIFT
4. YEAR
FOR ADDITIONAL INFORMATION SEE SECTION 5 UNDER PROCEDURES IN ES-34735-008.

MATING CONNECTOR DRAWINGS

DESCRIPTION	MOLEX INLINE
2X2	SD-33472-0001
2X3	SD-33472-0001
2X4	SD-33472-0001
2X6	SD-33472-0001
2X8	SD-33472-0001
2X10	SD-33472-0001

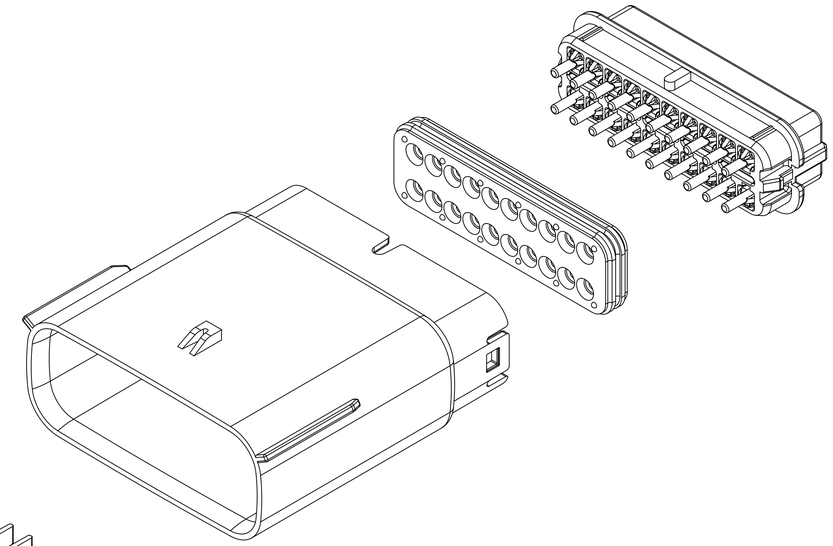

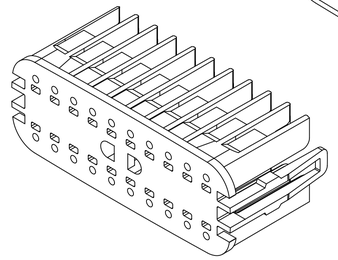

REV	REV DESCRIPTION
E2	ADDED MOLEX BACKSHELL DETAILS
E1	MIGRATED FROM COCREATE AND IMPORTED DXF FILES
E	ADDED CHARTED DIMENSIONS FOR 2X2, 2X4, 2X6 AND 2X8 WITH CLIPSLOT
D	MINOR GEOMETRY CHANGE FOR UL V0
C3	ADD 2X4
C2	ADD 2X3
C1	ADD UL V0 CONFIGURATIONS
C	ADD 2X8
B1	ADD 2X6 BACKSHELL INFO
B	ADD 2X6
A	INITIAL RELEASE

INSPECTION NUMBER LOG
LAST NUMBER: 9
ADDED:
REMOVED:

THIS DRAWING CONTAINS INFORMATION THAT IS PROPRIETARY TO MOLEX ELECTRONIC TECHNOLOGIES, LLC AND SHOULD NOT BE USED WITHOUT WRITTEN PERMISSION

SYMBOLS
A = 0
C = 0
F = 0
S = 0
= 0
= 0
= 0
= 0
= 0

DIMENSION UNITS: mm
SCALE: 1.5:1

GENERAL TOLERANCES (UNLESS SPECIFIED)

ANGULAR TOL	± 1.0 °
4 PLACES	±
3 PLACES	±
2 PLACES	± 0.1
1 PLACE	± 0.2
0 PLACES	±

DRAFT WHERE APPLICABLE MUST REMAIN WITHIN DIMENSIONS

CURRENT REV DESC:

EC NO: 171650
DRWN: PMANJUNATHAC 2018/01/03
CHK'D: MVANSLAMBROU 2018/02/16
APPR: MVANSLAMBROU 2018/02/16

INITIAL REVISION:
DRWN: APROFFITT 2014/04/28
APPR: VKOSHY 2014/05/14

THIRD ANGLE PROJECTION
DRAWING: A1-SIZE
SERIES: 33482

molex

MX150 BLADE
DUAL ROW SEALED ASSEMBLY MAT SEAL

PRODUCT CUSTOMER DRAWING

DOCUMENT NUMBER	DOC TYPE	DOC PART	REVISION
SD-33482-0001	PSD	001	E2

MATERIAL NUMBER	CUSTOMER	SHEET NUMBER
	GENERAL MARKET	1 OF 11

DOCUMENT STATUS	P1	RELEASE DATE	2018/02/16 22:02:26

SHEET DESCRIPTION
CONFIGURATIONS

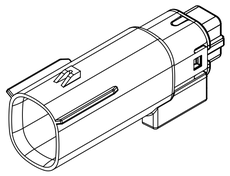

2X2 - STANDARD (STD)

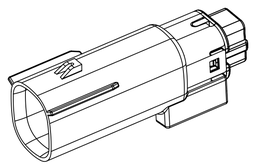

2X2 - UL V0*

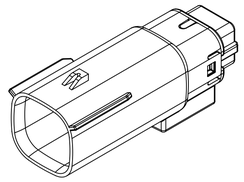

2X3 - STANDARD (STD)

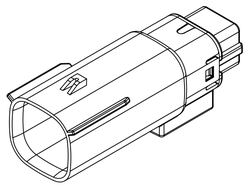

2X3 - LENGTHENED

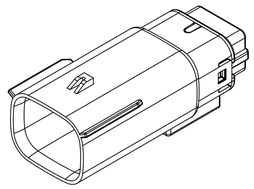

2X4 - STANDARD (STD)

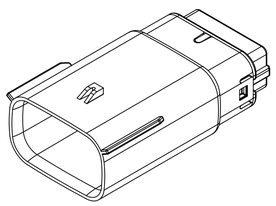

2X6 - STANDARD (STD)

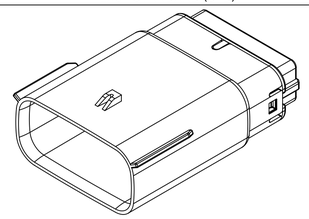

2X8 - STANDARD (STD)

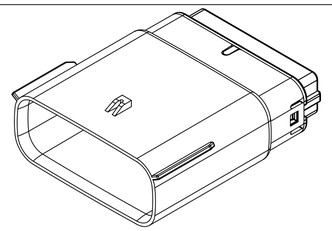

2X10 - STANDARD (STD)

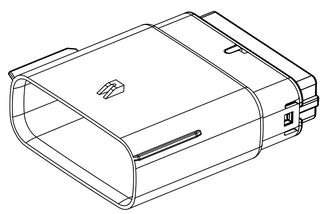

2X10 - UL V0*

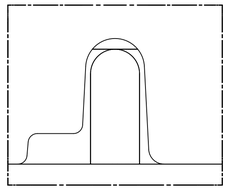

UL V0 UNIQUE FEATURE

Partial1

SCALE 10:1

* MINOR GEOMETRY CHANGE THAN STANDARD CONFIGURATION.
SEE NOTE 2a FOR MORE INFORMATION

THIS DRAWING CONTAINS INFORMATION THAT IS PROPRIETARY TO MOLEX ELECTRONIC TECHNOLOGIES, LLC AND SHOULD NOT BE USED WITHOUT WRITTEN PERMISSION

SYMBOLS		
FA	=	0
FC	=	0
FD	=	0
S	=	0
▼	=	0
C	=	0
☒	=	0
■	=	0
C	=	0

DIMENSION UNITS	SCALE
mm	1.5:1

GENERAL TOLERANCES (UNLESS SPECIFIED)

ANGULAR TOL	±	1.0 °
4 PLACES	±	
3 PLACES	±	
2 PLACES	±	0.1
1 PLACE	±	0.2
0 PLACES	±	

DRAFT WHERE APPLICABLE MUST REMAIN WITHIN DIMENSIONS

CURRENT REV DESC:

EC NO: 171650
DRWN: PMANJUNATHAC 2018/01/03
CHK'D: MVANSLAMBROU 2018/02/16
APPR: MVANSLAMBROU 2018/02/16

INITIAL REVISION:
DRWN: APROFFITT 2014/04/28
APPR: VKOSHY 2014/05/14

THIRD ANGLE PROJECTION

DRAWING	SERIES
A1-SIZE	33482

molex

MX150 BLADE
DUAL ROW SEALED ASSEMBLY MAT SEAL

PRODUCT CUSTOMER DRAWING

DOCUMENT NUMBER	DOC TYPE	DOC PART	REVISION
SD-33482-0001	PSD	001	E2

MATERIAL NUMBER	CUSTOMER	SHEET NUMBER
	GENERAL MARKET	2 OF 11

DOCUMENT STATUS	P1	RELEASE DATE	2018/02/16	22:02:26

SHEET DESCRIPTION
KEY CONFIGURATIONS

2X2

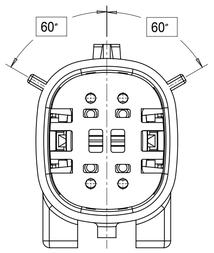

KEY A

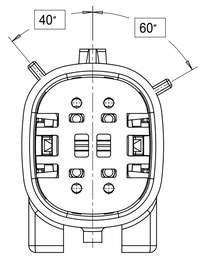

KEY B

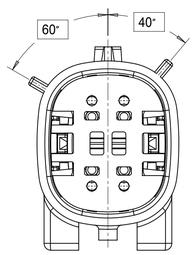

KEY C

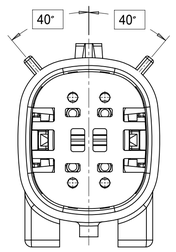

KEY D

2X3

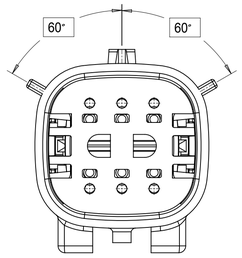

KEY A

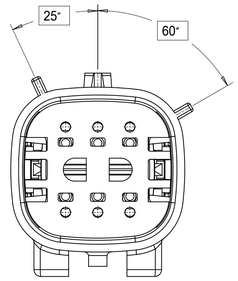

KEY B

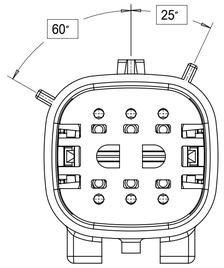

KEY C

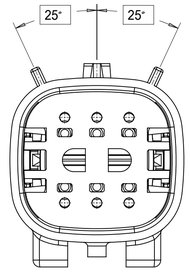

KEY D

2X4

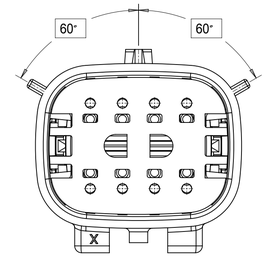

KEY A

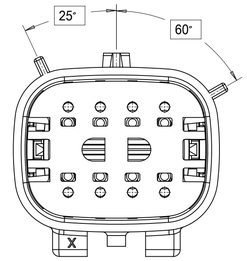

KEY B

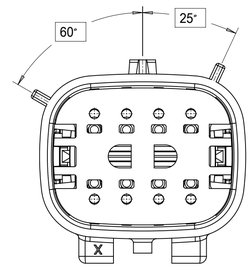

KEY C

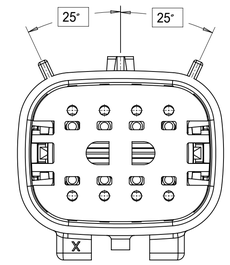

KEY D

SYMBOLS	
FA	= 0
FC	= 0
FD	= 0
S	= 0
▼	= 0
C	= 0
☒	= 0
■	= 0
C	= 0

THIS DRAWING CONTAINS INFORMATION THAT IS PROPRIETARY TO MOLEX ELECTRONIC TECHNOLOGIES, LLC AND SHOULD NOT BE USED WITHOUT WRITTEN PERMISSION

DIMENSION UNITS	SCALE
mm	3:1

GENERAL TOLERANCES (UNLESS SPECIFIED)

ANGULAR TOL	±	1.0 °
4 PLACES	±	
3 PLACES	±	
2 PLACES	±	0.1
1 PLACE	±	0.2
0 PLACES	±	

DRAFT WHERE APPLICABLE MUST REMAIN WITHIN DIMENSIONS

CURRENT REV DESC:

EC NO: 171650
DRWN: PMANJUNATHAC 2018/01/03
CHK'D: MVANSLAMBROU 2018/02/16
APPR: MVANSLAMBROU 2018/02/16

INITIAL REVISION:
DRWN: APROFFITT 2014/04/28
APPR: VKOSHY 2014/05/14

molex

MX150 BLADE
DUAL ROW SEALED ASSEMBLY MAT SEAL

PRODUCT CUSTOMER DRAWING

DOCUMENT NUMBER	DOC TYPE	DOC PART	REVISION
SD-33482-0001	PSD	001	E2

THIRD ANGLE PROJECTION	DRAWING	SERIES	MATERIAL NUMBER	CUSTOMER	SHEET NUMBER
	A1-SIZE	33482		GENERAL MARKET	3 OF 11

DOCUMENT STATUS	P1	RELEASE DATE	2018/02/16	22:02:26

SHEET DESCRIPTION
KEY CONFIGURATIONS CONT.

2X6

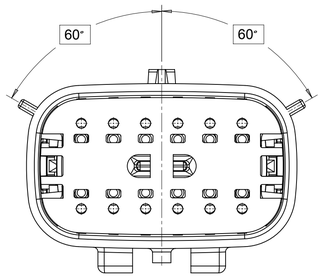

KEY A

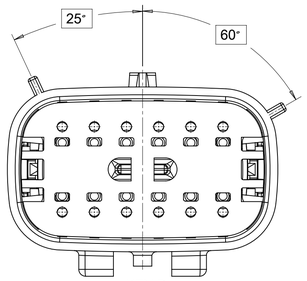

KEY B

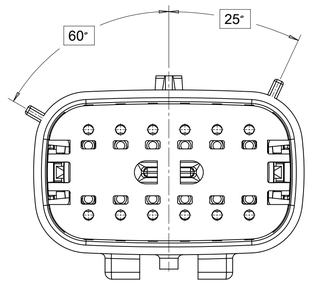

KEY C

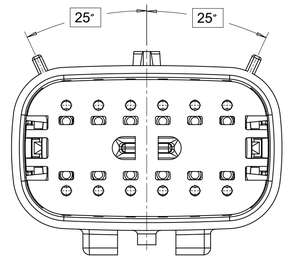

KEY D

2X8

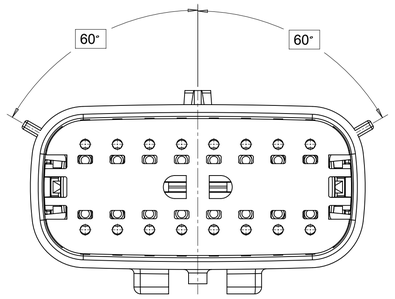

KEY A

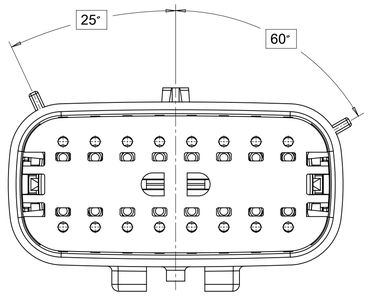

KEY B

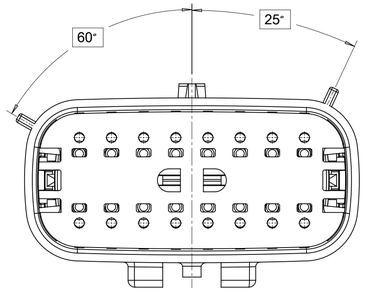

KEY C

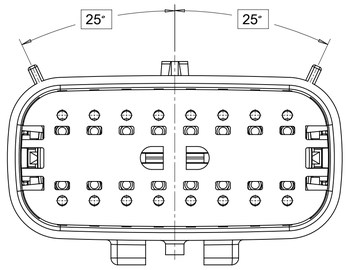

KEY D

2X10

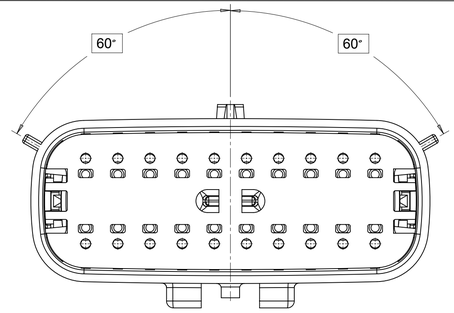

KEY A

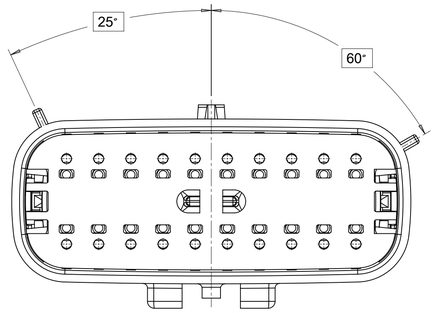

KEY B

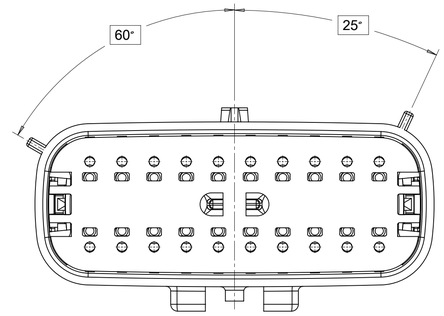

KEY C

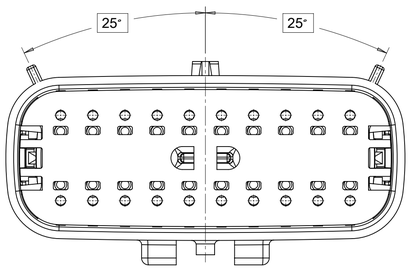

KEY D

SYMBOLS
F = 0
E = 0
D = 0
S = 0
= 0
C = 0
= 0
= 0
G = 0

THIS DRAWING CONTAINS INFORMATION THAT IS PROPRIETARY TO MOLEX ELECTRONIC TECHNOLOGIES, LLC AND SHOULD NOT BE USED WITHOUT WRITTEN PERMISSION

DIMENSION UNITS	SCALE
mm	3:1

GENERAL TOLERANCES (UNLESS SPECIFIED)

ANGULAR TOL	±	1.0 °
4 PLACES	±	
3 PLACES	±	
2 PLACES	±	0.1
1 PLACE	±	0.2
0 PLACES	±	

DRAFT WHERE APPLICABLE MUST REMAIN WITHIN DIMENSIONS

CURRENT REV DESC:

EC NO: 171650
DRWN: PMANJUNATHAC 2018/01/03
CHK'D: MVANSLAMBROU 2018/02/16
APPR: MVANSLAMBROU 2018/02/16

INITIAL REVISION:
DRWN: APROFFITT 2014/04/28
APPR: VKOSHY 2014/05/14

molex

MX150 BLADE
DUAL ROW SEALED ASSEMBLY MAT SEAL

PRODUCT CUSTOMER DRAWING

DOCUMENT NUMBER	DOC TYPE	DOC PART	REVISION
SD-33482-0001	PSD	001	E2

THIRD ANGLE PROJECTION	DRAWING	SERIES	MATERIAL NUMBER	CUSTOMER	SHEET NUMBER
	A1-SIZE	33482		GENERAL MARKET	4 OF 11

DOCUMENT STATUS	P1	RELEASE DATE	2018/02/16 22:02:26

TEMPLATE, master by portal A1
DO NOT MODIFY
DATE: 2017/10/06

SHEET DESCRIPTION
BLADE SEALED ASSEMBLY

CHARTED DIMENSION					
DESCRIPTION	DIMENSIONS				
	A	B	C	D	E
2X2	15.54	1.75	24.40	54.45	22.23
2X3 STANDARD	19.04	3.50	26.21	54.45	22.23
2X3 LENGTHENED	19.04	3.50	26.21	56.45	22.23
2X4	22.54	1.75	27.21	54.45	22.23
2X6	29.54	1.75	32.27	54.45	22.23
2X8	36.54	1.75	38.88	54.45	22.23
2X10	43.64	1.75	45.65	54.45	22.05

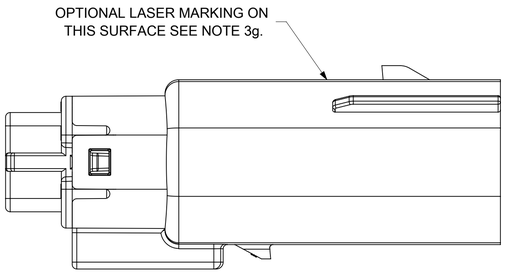

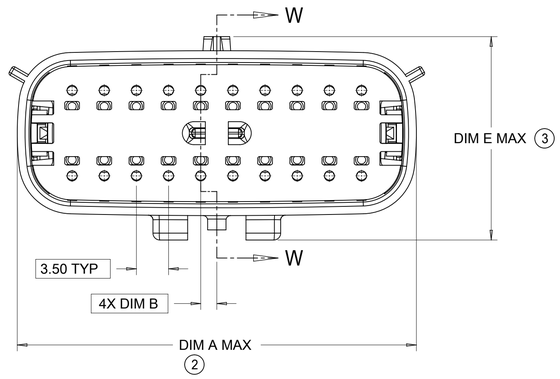

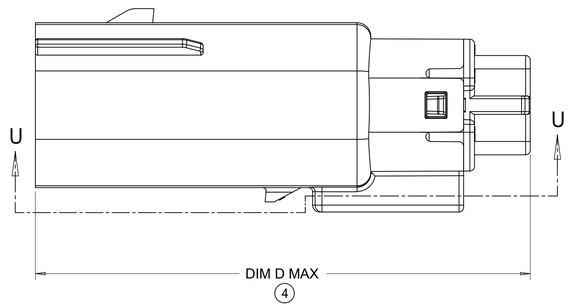

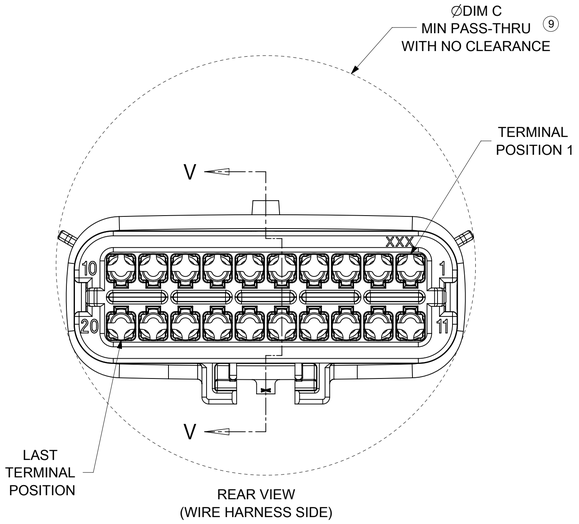

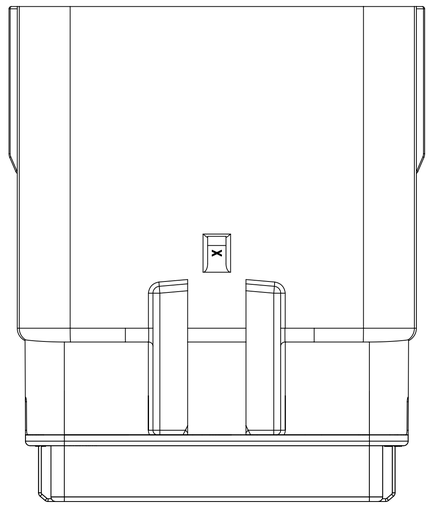

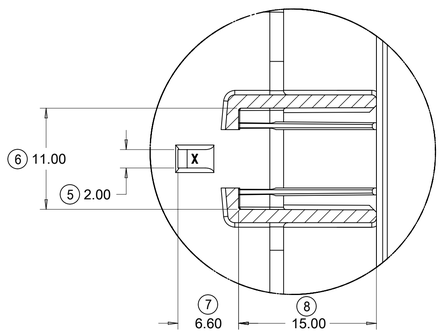

PartialU-U
SCALE 3:1

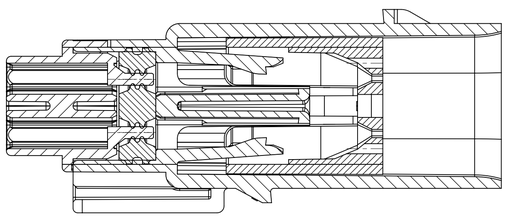

PRIMARY LOCK REINFORCEMENT (PLR) SHOWN
IN PRE-STAGED POSITION

SECTION W-W

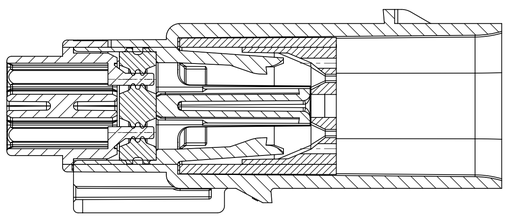

PRIMARY LOCK REINFORCEMENT (PLR) SHOWN
IN FINAL-LOCK POSITION

SECTION V-V

DOCUMENT STATUS	P1	RELEASE DATE	2018/02/16 22:02:26

SYMBOLS	
A = 0	
B = 0	
C = 0	
D = 0	
E = 0	
F = 0	
G = 0	

THIS DRAWING CONTAINS INFORMATION THAT IS PROPRIETARY TO MOLEX ELECTRONIC TECHNOLOGIES, LLC AND SHOULD NOT BE USED WITHOUT WRITTEN PERMISSION

DIMENSION UNITS	SCALE
mm	3:1

GENERAL TOLERANCES (UNLESS SPECIFIED)		
ANGULAR TOL	±	1.0 °
4 PLACES	±	
3 PLACES	±	
2 PLACES	±	0.1
1 PLACE	±	0.2
0 PLACES	±	

DRAFT WHERE APPLICABLE MUST REMAIN WITHIN DIMENSIONS

CURRENT REV DESC:

EC NO: 171650
DRWN: PMANJUNATHAC 2018/01/03
CHK'D: MVANSLAMBROU 2018/02/16
APPR: MVANSLAMBROU 2018/02/16

INITIAL REVISION:
DRWN: APROFFITT 2014/04/28
APPR: VKOSHY 2014/05/14

molex

MX150 BLADE
DUAL ROW SEALED ASSEMBLY MAT SEAL

PRODUCT CUSTOMER DRAWING

DOCUMENT NUMBER	DOC TYPE	DOC PART	REVISION
SD-33482-0001	PSD	001	E2

THIRD ANGLE PROJECTION	DRAWING	SERIES	MATERIAL NUMBER	CUSTOMER	SHEET NUMBER
	A1-SIZE	33482		GENERAL MARKET	5 OF 11

SHEET DESCRIPTION
SYSTEM PACKAGING

CHARTED DIMENSION				
CKT	BLADE CONFIGURATION	RECEPTACLE CONFIGURATION	DIMENSIONS	
			K	L
2X2	STANDARD	W/O CLIPSLOT	72.78	28.00
		W/ CLIPSLOT	72.78	28.50
		LENGTHENED	77.21	28.00
2X3	STANDARD	W/O CLIPSLOT	72.78	28.00
		W/ CLIPSLOT		30.50
	LENGTHENED	W/O CLIPSLOT	74.79	28.00
		W/ CLIPSLOT		30.50
2X4	STANDARD	W/O CLIPSLOT	72.78	29.50
		W/ CLIPSLOT		31.50
2X6	STANDARD	W/O CLIPSLOT	72.79	35.58
		W/ CLIPSLOT		
2X8	STANDARD	W/O CLIPSLOT	72.67	42.25
		W/ CLIPSLOT		
2X10	STANDARD	STANDARD	72.78	49.05

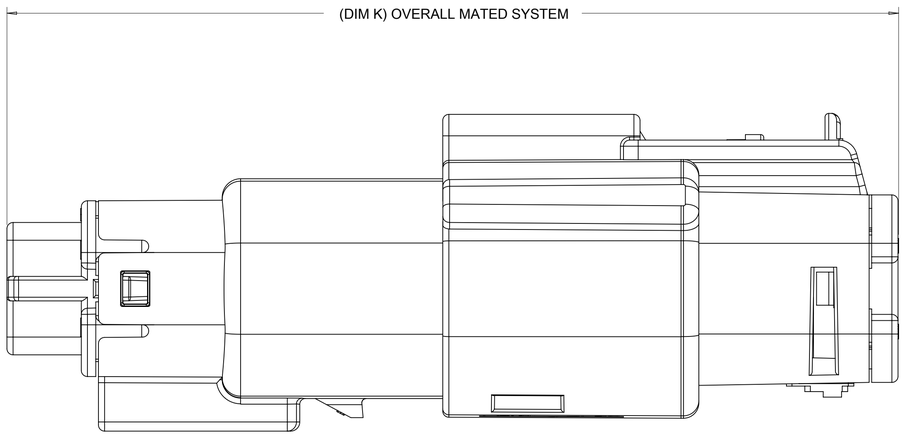

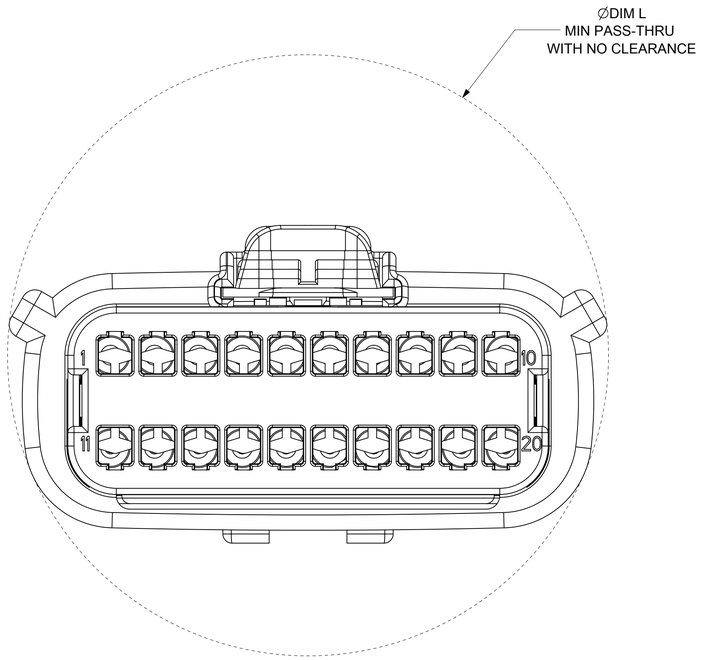

SYMBOLS
A = 0
C = 0
D = 0
S = 0
= 0
C = 0
= 0
= 0
S = 0

THIS DRAWING CONTAINS INFORMATION THAT IS PROPRIETARY TO MOLEX ELECTRONIC TECHNOLOGIES, LLC AND SHOULD NOT BE USED WITHOUT WRITTEN PERMISSION

DIMENSION UNITS	SCALE
mm	4:1

GENERAL TOLERANCES (UNLESS SPECIFIED)		
ANGULAR TOL	±	1.0 °
4 PLACES	±	
3 PLACES	±	
2 PLACES	±	0.1
1 PLACE	±	0.2
0 PLACES	±	

DRAFT WHERE APPLICABLE MUST REMAIN WITHIN DIMENSIONS

CURRENT REV DESC:

EC NO: 171650
DRWN: PMANJUNATHAC 2018/01/03
CHK'D: MVANSLAMBROU 2018/02/16
APPR: MVANSLAMBROU 2018/02/16

INITIAL REVISION:
DRWN: APROFFITT 2014/04/28
APPR: VKOSHY 2014/05/14

THIRD ANGLE PROJECTION | DRAWING: A1-SIZE | SERIES: 33482

molex

MX150 BLADE
DUAL ROW SEALED ASSEMBLY MAT SEAL

PRODUCT CUSTOMER DRAWING

DOCUMENT NUMBER	DOC TYPE	DOC PART	REVISION
SD-33482-0001	PSD	001	E2

MATERIAL NUMBER	CUSTOMER	SHEET NUMBER
	GENERAL MARKET	6 OF 11

DOCUMENT STATUS	P1	RELEASE DATE	2018/02/16 22:02:26

TEMPLATE GENERATED BY:
REVISION: H
DATE: 2017/10/05

SHEET DESCRIPTION
BACKSHELL NOTES

BACKSHELL NOTES: VALID UNLESS OTHERWISE SPECIFIED

1. GENERAL:
a. APPLICATION SPECIFICATION SEE: AS-34951-001
-DESIGNED TO MATE WITH BLADE SEALED ASSEMBLY SPECIFIED IN MOLEX DRAWING SD-33482-0001.
-SYSTEM TO BE USED WITH WIRE WITHIN DIAMETER RANGE OF 1.2mm TO 2.69mm.
-COMPONENTS ARE OPTIONAL AND MUST BE PURCHASED SEPERATELY.
-DESIGN IS OWNED BY SCHLEMMER FOR SCHLEMMER BACKSHELL.
-DESIGN IS OWNED BY MOLEX FOR MOLEX BACKSHELL.
-90° ADAPTOR DESIGN IS OWNED BY MOLEX.
-FOR ADDITIONAL INFORMATION SEE THE BACKSHELL COMPONENT DRAWING SD-34950-0001.

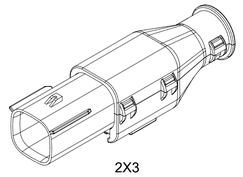

2X3

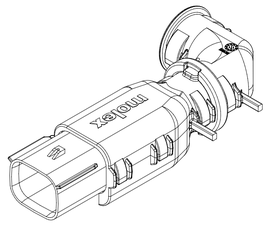

2X4

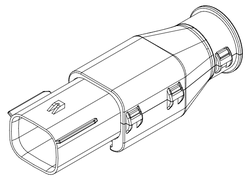

2X4

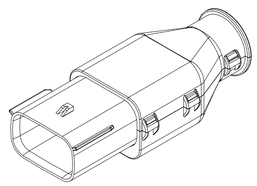

2X6

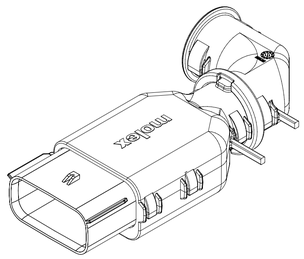

2X8

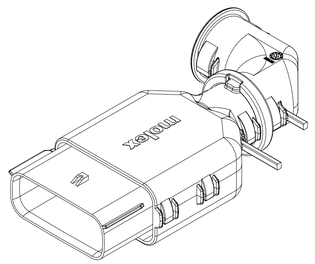

2X10

BACKSHELL CUSTOMER
MODEL NUMBER LEGEND

34950-XXXX

CUSTOMER MODEL COMPONENTS
- 0 - SCHLEMMER BACKSHELL ONLY
- 1 - SCHLEMMER BACKSHELL & MX150 HOUSING KEY A ASSEMBLY
- 2 - SCHLEMMER BACKSHELL & MX150 HOUSING KEY B ASSEMBLY
- 3 - SCHLEMMER BACKSHELL & MX150 HOUSING KEY C ASSEMBLY
- 4 - SCHLEMMER BACKSHELL & MX150 HOUSING KEY D ASSEMBLY
- 5 - MOLEX BACKSHELL ONLY
- 6 - MOLEX BACKSHELL & MX150 HOUSING KEY A ASSEMBLY
- 7 - MOLEX BACKSHELL & MX150 HOUSING KEY B ASSEMBLY
- 8 - MOLEX BACKSHELL & MX150 HOUSING KEY C ASSEMBLY
- 9 - MOLEX BACKSHELL & MX150 HOUSING KEY D ASSEMBLY

BACKSHELL FEATURES
- 1 - WITH RIBS
- 2 - WITHOUT RIBS
- 3 - 90° ADAPTOR

MX150 CIRCUIT SIZE 04, 06, 08, 12, 16, 20

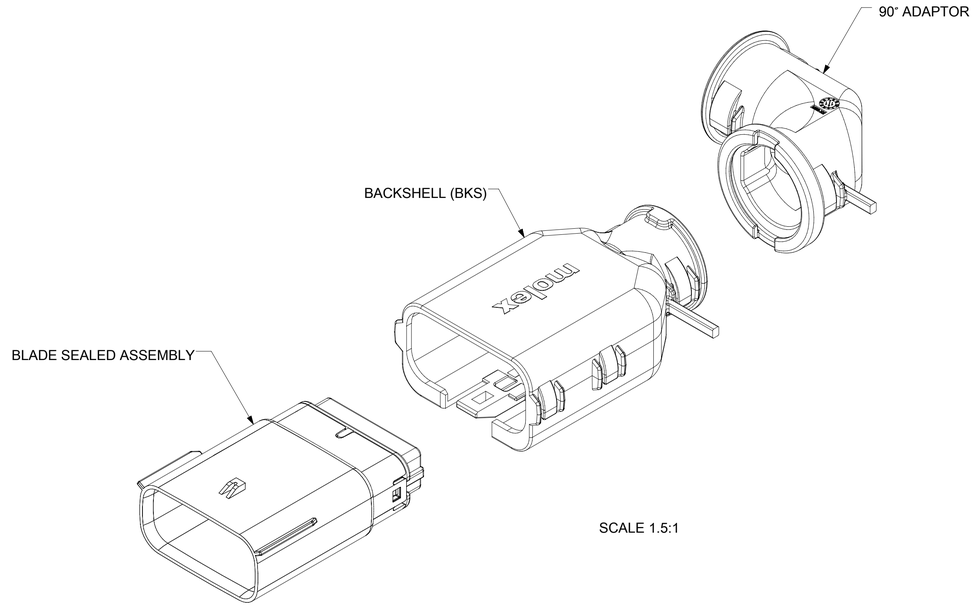

SCALE 1.5:1

DOCUMENT STATUS	P1	RELEASE DATE	2018/02/16 22:02:26

THIS DRAWING CONTAINS INFORMATION THAT IS PROPRIETARY TO MOLEX ELECTRONIC TECHNOLOGIES, LLC AND SHOULD NOT BE USED WITHOUT WRITTEN PERMISSION

SYMBOLS	DIMENSION UNITS	SCALE
A = 0	mm	1.5:1
C = 0	GENERAL TOLERANCES (UNLESS SPECIFIED)	
F = 0	ANGULAR TOL	± 1.0 °
S = 0	4 PLACES	±
= 0	3 PLACES	±
C = 0	2 PLACES	± 0.1
= 0	1 PLACE	± 0.2
= 0	0 PLACES	±
V = 0	DRAFT WHERE APPLICABLE MUST REMAIN WITHIN DIMENSIONS	

CURRENT REV DESC:

EC NO: 171650
DRWN: PMANJUNATHAC 2018/01/03
CHK'D: MVANSLAMBROU 2018/02/16
APPR: MVANSLAMBROU 2018/02/16

INITIAL REVISION:
DRWN: APROFFITT 2014/04/28
APPR: VKOSHY 2014/05/14

THIRD ANGLE PROJECTION | DRAWING: A1-SIZE | SERIES: 33482

molex

MX150 BLADE
DUAL ROW SEALED ASSEMBLY MAT SEAL

PRODUCT CUSTOMER DRAWING

DOCUMENT NUMBER	DOC TYPE	DOC PART	REVISION
SD-33482-0001	PSD	001	E2

MATERIAL NUMBER	CUSTOMER	SHEET NUMBER
	GENERAL MARKET	7 OF 11

SHEET DESCRIPTION
SCHLEMMER BACKSHELL

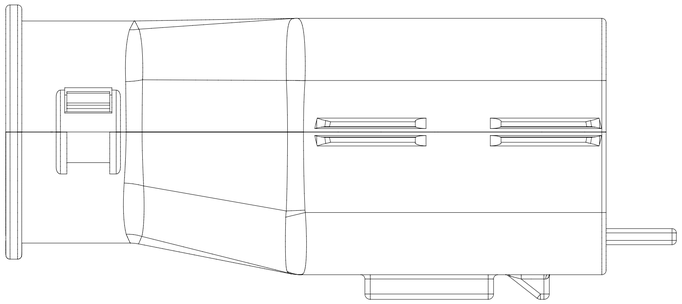

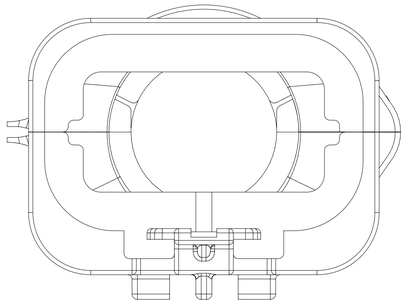

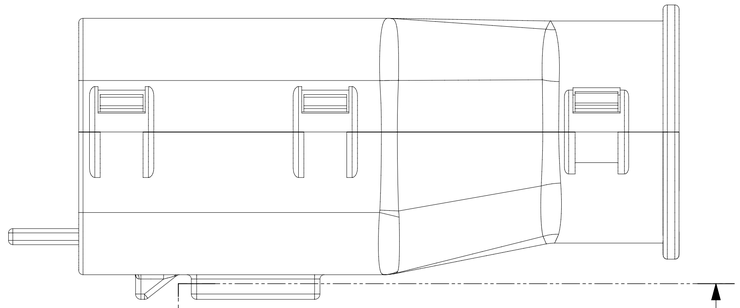

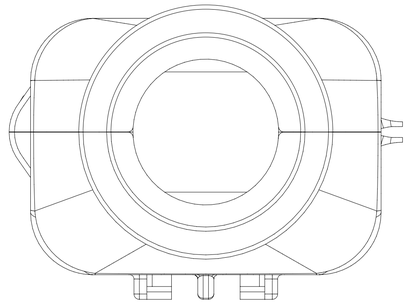

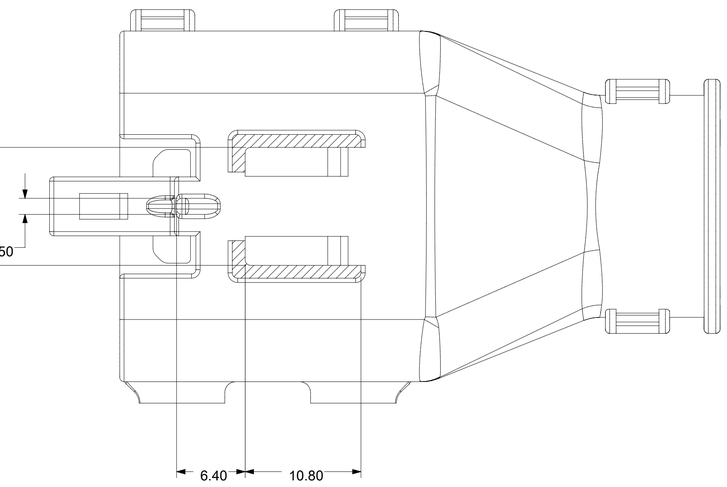

SECTION A-A

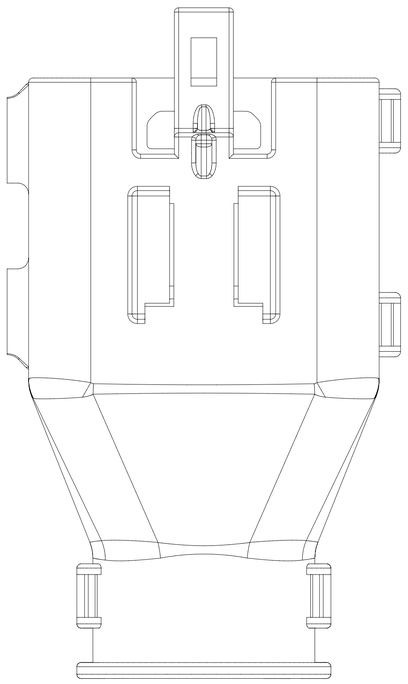

SYMBOLS	DIMENSION UNITS	SCALE
= 0	mm	3.5:1
= 0	GENERAL TOLERANCES (UNLESS SPECIFIED)	
= 0	ANGULAR TOL ± 1.0 °	
= 0	4 PLACES ±	
= 0	3 PLACES ±	
= 0	2 PLACES ± 0.1	
= 0	1 PLACE ± 0.2	
= 0	0 PLACES ±	
= 0	DRAFT WHERE APPLICABLE MUST REMAIN WITHIN DIMENSIONS	

THIS DRAWING CONTAINS INFORMATION THAT IS PROPRIETARY TO MOLEX ELECTRONIC TECHNOLOGIES, LLC AND SHOULD NOT BE USED WITHOUT WRITTEN PERMISSION

CURRENT REV DESC:

EC NO: 171650

DRWN:	PMANJUNATHAC	2018/01/03
CHK'D:	MVANSLAMBROU	2018/02/16
APPR:	MVANSLAMBROU	2018/02/16

INITIAL REVISION:

DRWN:	APROFFITT	2014/04/28
APPR:	VKOSHY	2014/05/14

THIRD ANGLE PROJECTION | DRAWING: A1-SIZE | SERIES: 33482

molex

MX150 BLADE
DUAL ROW SEALED ASSEMBLY MAT SEAL

PRODUCT CUSTOMER DRAWING

DOCUMENT NUMBER	DOC TYPE	DOC PART	REVISION
SD-33482-0001	PSD	001	E2

MATERIAL NUMBER	CUSTOMER	SHEET NUMBER
	GENERAL MARKET	8 OF 11

DOCUMENT STATUS	P1	RELEASE DATE	2018/02/16 22:02:26

CURRENT PRINTED REVISION:
REVISION #:
DATE: 2017/10/09

SHEET DESCRIPTION
MOLEX BACKSHELL

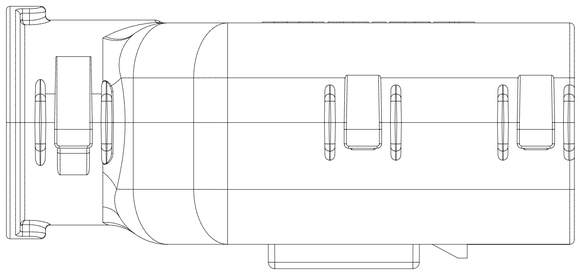

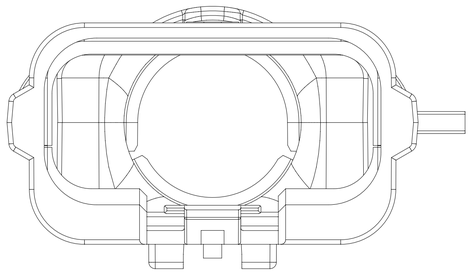

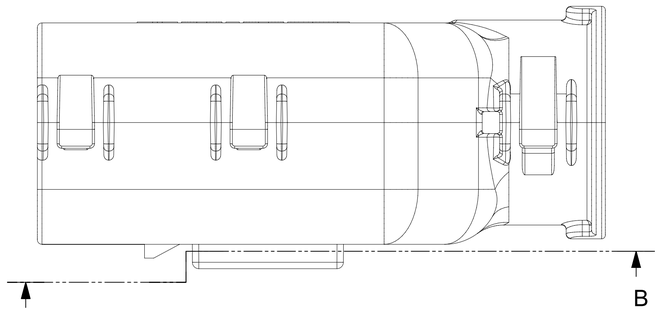

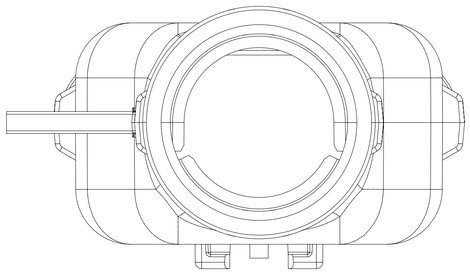

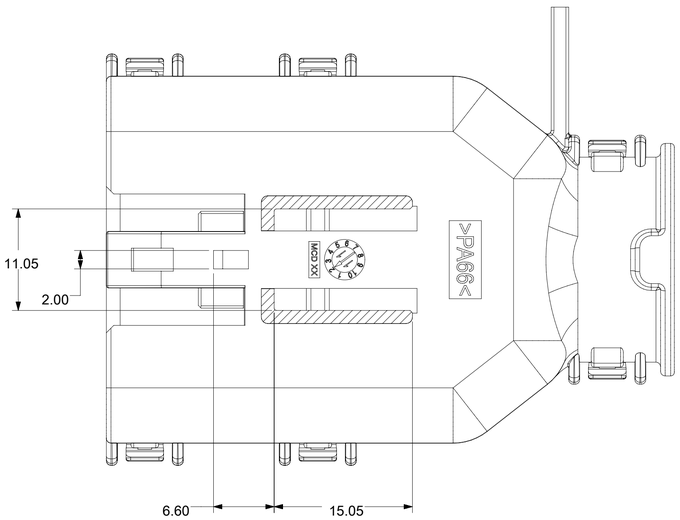

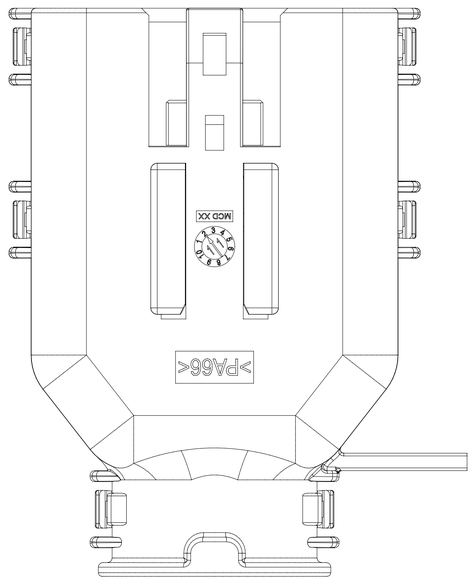

SECTION B-B

SYMBOLS	THIS DRAWING CONTAINS INFORMATION THAT IS PROPRIETARY TO MOLEX ELECTRONIC TECHNOLOGIES, LLC AND SHOULD NOT BE USED WITHOUT WRITTEN PERMISSION			
A = 0	DIMENSION UNITS: mm	SCALE: 3:1	CURRENT REV DESC:	molex
C = 0	GENERAL TOLERANCES (UNLESS SPECIFIED)			
F = 0	ANGULAR TOL ± 1.0 °		EC NO: 171650	MX150 BLADE DUAL ROW SEALED ASSEMBLY MAT SEAL
S = 0	4 PLACES ±		DRWN: PMANJUNATHAC 2018/01/03	
= 0	3 PLACES ±		CHK'D: MVANSLAMBROU 2018/02/16	PRODUCT CUSTOMER DRAWING
V = 0	2 PLACES ± 0.1		APPR: MVANSLAMBROU 2018/02/16	
X = 0	1 PLACE ± 0.2		INITIAL REVISION:	DOCUMENT NUMBER: SD-33482-0001 / DOC TYPE: PSD / DOC PART: 001 / REVISION: E2
= 0	0 PLACES ±		DRWN: APROFFITT 2014/04/28	
= 0	DRAFT WHERE APPLICABLE MUST REMAIN WITHIN DIMENSIONS		APPR: VKOSHY 2014/05/14	
	THIRD ANGLE PROJECTION	DRAWING: A1-SIZE	SERIES: 33482	MATERIAL NUMBER / CUSTOMER: GENERAL MARKET / SHEET NUMBER: 9 OF 11

DOCUMENT STATUS	P1	RELEASE DATE	2018/02/16 22:02:26

SHEET DESCRIPTION
SCHLEMMER BACKSHELL CONFIGURATIONS

CHARTED DIMENSIONS

CKT	BLADE CONFIGURATION	RECEPTACLE CONFIGURATION	DIMENSIONS				
			M	N	P	R	T
2X3	STANDARD	STANDARD	106.83	32.75	31.75	29.00	29.50
	LENGTHENED		108.71				
2X4	STANDARD	STANDARD	106.83	33.50	31.90	30.70	30.70
2X6	STANDARD	STANDARD	106.83	37.84	37.27	35.83	36.83

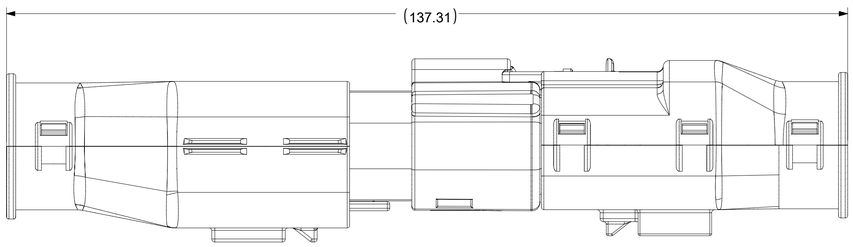

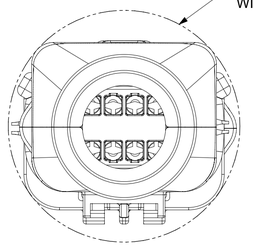

OVERALL MATED SYSTEM WITH BLADE AND RECEPTACLE BACKSHELL

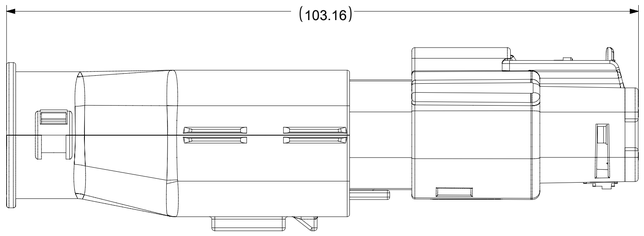

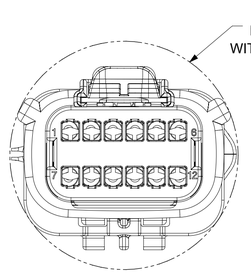

OVERALL MATED SYSTEM WITH BLADE BACKSHELL

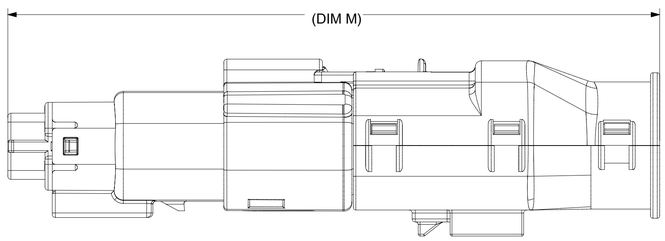

OVERALL MATED SYSTEM WITH RECEPTACLE BACKSHELL

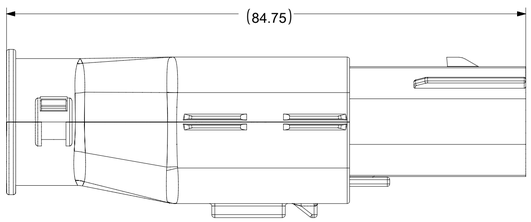

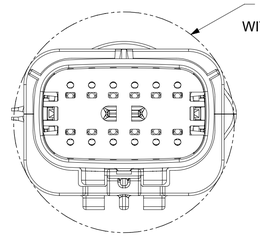

BLADE SEALED ASSEMBLY WITH BLADE BACKSHELL

SYMBOLS
= 0
= 0
= 0
= 0
= 0
= 0
= 0
= 0
= 0

THIS DRAWING CONTAINS INFORMATION THAT IS PROPRIETARY TO MOLEX ELECTRONIC TECHNOLOGIES, LLC AND SHOULD NOT BE USED WITHOUT WRITTEN PERMISSION

DIMENSION UNITS	SCALE
mm	2:1

GENERAL TOLERANCES (UNLESS SPECIFIED)

ANGULAR TOL	±	1.0 °
4 PLACES	±	
3 PLACES	±	
2 PLACES	±	0.1
1 PLACE	±	0.2
0 PLACES	±	

DRAFT WHERE APPLICABLE MUST REMAIN WITHIN DIMENSIONS

CURRENT REV DESC:

EC NO: 171650
DRWN: PMANJUNATHAC 2018/01/03
CHK'D: MVANSLAMBROU 2018/02/16
APPR: MVANSLAMBROU 2018/02/16

INITIAL REVISION:
DRWN: APROFFITT 2014/04/28
APPR: VKOSHY 2014/05/14

THIRD ANGLE PROJECTION | DRAWING: A1-SIZE | SERIES: 33482

molex

MX150 BLADE
DUAL ROW SEALED ASSEMBLY MAT SEAL

PRODUCT CUSTOMER DRAWING

DOCUMENT NUMBER	DOC TYPE	DOC PART	REVISION
SD-33482-0001	PSD	001	E2

MATERIAL NUMBER	CUSTOMER	SHEET NUMBER
	GENERAL MARKET	10 OF 11

DOCUMENT STATUS	P1	RELEASE DATE	2018/02/16 22:02:26

SHEET DESCRIPTION

MOLEX BACKSHELL CONFIGURATIONS

CHARTED DIMENSIONS

CKT	BLADE CONFIGURATION	RECEPTACLE CONFIGURATION	DIMENSIONS									
			U	V	W	X	Y	AA	AB	AC	AD	AE
2X4	STANDARD	STANDARD	115.24	94.36	93.93	75.62	32.10	32.93	32.54	32.85	31.76	56.81
2X8	STANDARD	STANDARD	132.49	102.81	102.73	84.07	36.10	45.44	45.44	42.65	45.44	68.18
2X10	STANDARD	STANDARD	132.49	102.81	102.73	84.07	36.10	45.44	45.44	42.65	45.44	68.18

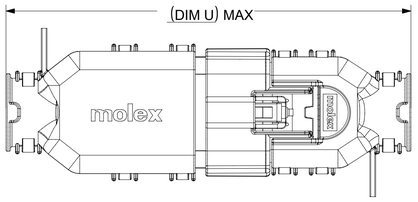

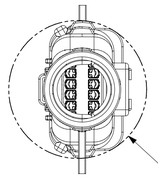

OVERALL MATED SYSTEM WITH BLADE AND RECEPTACLE BACKSHELL

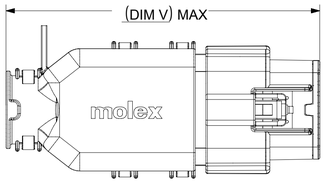

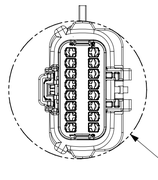

OVERALL MATED SYSTEM WITH BLADE BACKSHELL

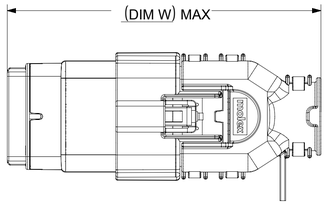

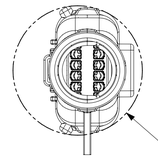

OVERALL MATED SYSTEM WITH RECEPTACLE BACKSHELL

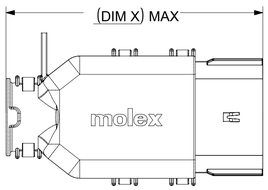

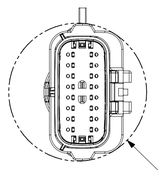

BLADE SEALED ASSEMBLY WITH BLADE BACKSHELL

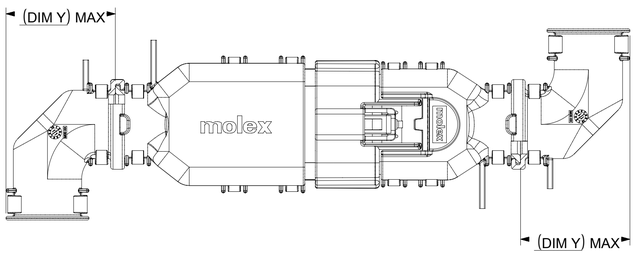

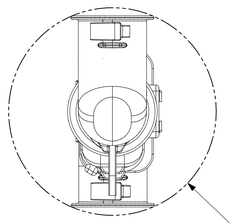

ADD THE VALUE OF 'Y' TO THE TOTAL DIMENSION
WHENEVER ADAPTOR IS USED

SYMBOLS	
A = 0	
C = 0	
F = 0	
S = 0	
= 0	
= 0	
= 0	
= 0	
= 0	

THIS DRAWING CONTAINS INFORMATION THAT IS PROPRIETARY TO MOLEX ELECTRONIC TECHNOLOGIES, LLC AND SHOULD NOT BE USED WITHOUT WRITTEN PERMISSION

DIMENSION UNITS	SCALE
mm	1:1

GENERAL TOLERANCES (UNLESS SPECIFIED)

ANGULAR TOL	±	1.0 °
4 PLACES	±	
3 PLACES	±	
2 PLACES	±	0.1
1 PLACE	±	0.2
0 PLACES	±	

DRAFT WHERE APPLICABLE MUST REMAIN WITHIN DIMENSIONS

CURRENT REV DESC:

EC NO: 171650

DRWN: PMANJUNATHAC 2018/01/03

CHK'D: MVANSLAMBROU 2018/02/16

APPR: MVANSLAMBROU 2018/02/16

INITIAL REVISION:

DRWN: APROFFITT 2014/04/28

APPR: VKOSHY 2014/05/14

THIRD ANGLE PROJECTION | DRAWING: A1-SIZE | SERIES: 33482

molex

MX150 BLADE
DUAL ROW SEALED ASSEMBLY MAT SEAL

PRODUCT CUSTOMER DRAWING

DOCUMENT NUMBER	DOC TYPE	DOC PART	REVISION
SD-33482-0001	PSD	001	E2

MATERIAL NUMBER	CUSTOMER	SHEET NUMBER
	GENERAL MARKET	11 OF 11

DOCUMENT STATUS	P1	RELEASE DATE	2018/02/16 22:02:26

molex

a AE5xhwhEh. [! 59{9! [95 ! {{9a . [Ða ! ¤{9! [. ha ! b5 tLb h- ¤{I 99¤

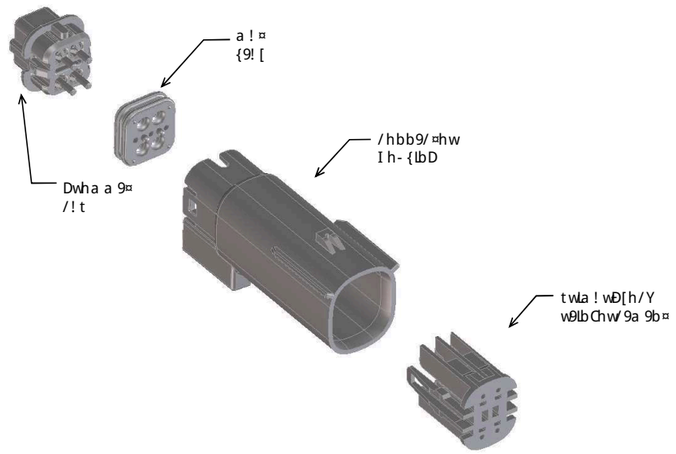

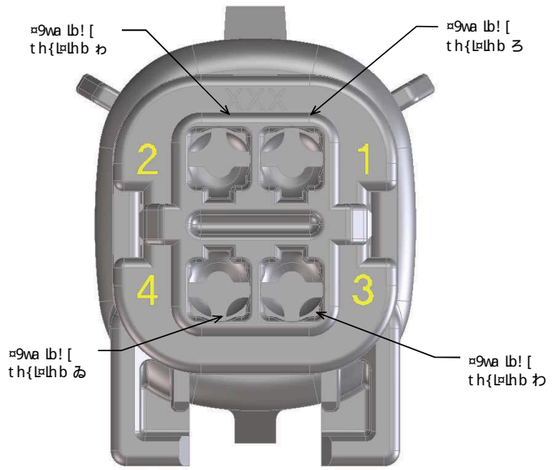

Chw! 55l¤lhb! [lbChwa ! ¤lhb {99 {5

! . . wØ¹ L! ¤lhb	59{/wLt ¤lhb	/h[hw	a ! ¤9wL! [
! ⊡[Y	I h- {lbD¤¥Y9ÐlbD ht ¤lhb !	. [! /Y	{t{ JbÐ[hb DC ⇄
. ⊡D	I h- {lbD¤¥Y9ÐlbD ht ¤lhb .	[lDI ¤ DwL Ð	{t{ JbÐ[hb DC ⇄
/ ⊡w	I h- {lbD¤¥Y9ÐlbD ht ¤lhb /	. wh° b	{t{ JbÐ[hb DC ⇄
5 ⊡w	I h- {lbD¤¥Y9ÐlbD ht ¤lhb 5	DwØ9b	{t{ JbÐ[hb DC ⇄
/ ⊡5D	I h- {lbD¤¥Y9ÐlbD ht ¤lhb /	5! wY DwL Ð	{t{ JbÐ[hb DC ⇄
5 ⊡D	I h- {lbD¤¥Y9ÐlbD ht ¤lhb 5	{¤hb9 DwL Ð	{t{ JbÐ[hb DC ⇄
! ⊡P	I h- {lbD¤¥Y9ÐlbD ht ¤lhb !	Ð9[[h°	{t{ JbÐ[hb DC ⇄
D/t	Dwha a 9¤ /! t t[- DD95、	. [! /Y	{t{ JbÐ[hb DC ⇄
D/h	Dwha a 9¤ /! t ht9b、	. [! /Y	{t{ JbÐ[hb DC ⇄
t[w	t[w	b! ¤- wL [	{t{ JbÐ[hb DC ⇄
a	a ! ¤{9! [	whÐ! [. [- 9	LbI 9wØb¤[Ð[- . wL/! ¤95 {l[L/hb9

! {{9a . [Ð59{/wLt ¤lhb	! {{9a . [Ð t! w¤ b- a . 9w	¤I 9 twØ{9b/9 hC! b ! . . wØ¹ L! ¤lhb Lb5L/! ¤9{ ¤I 9 twØ{9b/9 hC¤I ! ¤/ha thb9b¤				. [h/Y95 ¤9wa lb! [{ /!¹ L¤Ð° L¤I ! b- a . 9wLb5L/! ¤9{ . [h/Y95 ¤9wa lb! [th{L¤lhb /!¹ L¤Ð° L¤I h- ¤! b- a . 9wLb5L/! ¤9{ ht9b ¤9wa lb! [th{L¤lhb									{¤! ¤- {	/ha a 9b¤{	ht ¤lhb! [! ¤¤! ¤/I a 9b¤{ {h[5 {9t 9wL ¤9[Ð	
		I h- {lbD Y9Ð⊻h[hw	Dwha a 9¤ /! t	t[w	a ! ¤{9! [	ƺ	ŵ	ƾ	ƽ											.! /Y{I 9[[° L¤I wL {	.! /Y{I 9[[° L¤I h- ¤ wL {
Y9Ð! ☞[! /Y	[illegible]	! ⊡[Y	D/h	t[w	a													{! [9! . [9			
Y9Ð. ¤f LDI ¤ DwL Ð	[illegible]	. ⊡D	D/h	t[w	a													{! [9! . [9			
Y9Ð/ ☞wh° b	[illegible]	/ ⊡w	D/h	t[w	a													bh¤ wØ/ha a 9b595	{99 [illegible]		
Y9Ð5¤ÐwØ9b	[illegible]	5 ⊡w	D/h	t[w	a													bh¤ wØ/ha a 9b595	{99 [illegible]		
Y9Ð! ☞[! /Y	[illegible]	! ⊡[Y	D/t	t[w	a		ŵ											{! [9! . [9			
Y9Ð. ¤f LDI ¤ DwL Ð	[illegible]	. ⊡D	D/t	t[w	a		ŵ											{! [9! . [9			
Y9Ð/ ☞wh° b	[illegible]	/ ⊡w	D/t	t[w	a		ŵ											bh¤ wØ/ha a 9b595	{99 [illegible]		
Y9Ð5¤ÐwØ9b	[illegible]	5 ⊡w	D/t	t[w	a		ŵ											bh¤ wØ/ha a 9b595	{99 [illegible]		
Y9Ð! ☞[! /Y	[illegible]	! ⊡[Y	D/t	t[w	a		ŵ	ƾ										{! [9! . [9			
Y9Ð. ¤f LDI ¤ DwL Ð	[illegible]	. ⊡D	D/t	t[w	a		ŵ	ƾ										{! [9! . [9			
Y9Ð/ ☞wh° b	[illegible]	/ ⊡w	D/t	t[w	a		ŵ	ƾ										bh¤ wØ/ha a 9b595	{99 [illegible]		
Y9Ð5¤ÐwØ9b	[illegible]	5 ⊡w	D/t	t[w	a		ŵ	ƾ										bh¤ wØ/ha a 9b595	{99 [illegible]		
Y9Ð! ☞[! /Y	[illegible]	! ⊡[Y	D/t	t[w	a	ƺ	ŵ	ƾ	ƽ									{! [9! . [9			
Y9Ð. ¤f LDI ¤ DwL Ð	[illegible]	. ⊡D	D/t	t[w	a	ƺ	ŵ	ƾ	ƽ									{! [9! . [9			
Y9Ð/ ☞wh° b	[illegible]	/ ⊡w	D/t	t[w	a	ƺ	ŵ	ƾ	ƽ									bh¤ wØ/ha a 9b595	{99 [illegible]		
Y9Ð5¤ÐwØ9b	[illegible]	5 ⊡w	D/t	t[w	a	ƺ	ŵ	ƾ	ƽ									bh¤ wØ/ha a 9b595	{99 [illegible]		
Y9Ð! ☞[! /Y	[illegible]	! ⊡[Y	D/t	t[w	a	ƺ	ŵ	ƾ										{! [9! . [9			
Y9Ð! ☞[! /Y	[illegible]	! ⊡[Y	D/t	t[w	a				ƽ									{! [9! . [9			
Y9Ð! ☞[! /Y	[illegible]	! ⊡[Y	D/t	t[w	a			ƾ	ƽ									{! [9! . [9			
Y9Ð! ☞[! /Y	[illegible]	! ⊡[Y	D/t	t[w	a			ƾ										{! [9! . [9			
Y9Ð! ☞[! /Y	[illegible]	! ⊡[Y	D/t	t[w	a	ƺ	ŵ											{! [9! . [9			
Y9Ð/ ¤5! wY DwL Ð	[illegible]	/ ⊡5D	D/h	t[w	a													{! [9! . [9			
Y9Ð5¤{¤hb9 DwL Ð	[illegible]	5 ⊡D	D/h	t[w	a													{! [9! . [9			
Y9Ð/ ¤5! wY DwL Ð	[illegible]	/ ⊡5D	D/t	t[w	a		ŵ											{! [9! . [9			
Y9Ð5¤{¤hb9 DwL Ð	[illegible]	5 ⊡D	D/t	t[w	a		ŵ											{! [9! . [9			
Y9Ð/ ¤5! wY DwL Ð	[illegible]	/ ⊡5D	D/t	t[w	a		ŵ	ƾ										{! [9! . [9			
Y9Ð5¤{¤hb9 DwL Ð	[illegible]	5 ⊡D	D/t	t[w	a		ŵ	ƾ										{! [9! . [9			
Y9Ð/ ¤5! wY DwL Ð	[illegible]	/ ⊡5D	D/t	t[w	a	ƺ	ŵ	ƾ	ƽ									{! [9! . [9			
Y9Ð5¤{¤hb9 DwL Ð	[illegible]	5 ⊡D	D/t	t[w	a	ƺ	ŵ	ƾ	ƽ									{! [9! . [9			
Y9Ð! ☞[! /Y	[illegible]	! ⊡[Y	D/t	t[w	a		ŵ		ƽ									{! [9! . [9			
Y9Ð! ¤ÐØ[! h°	[illegible]	! ⊡P	D/h	t[w	a													{! [9! . [9			
Y9Ð. ¤f LDI ¤ DwL Ð	[illegible]	. ⊡D	D/t	t[w	a	ƺ												{! [9! . [9			
Y9Ð! ☞[! /Y	[illegible]	! ⊡[Y	D/t	t[w	a	ƺ		ƾ										{! [9! . [9			
Y9Ð/ ¤5! wY DwL Ð	[illegible]	/ ⊡5D	D/t	t[w	a		ŵ		ƽ									{! [9! . [9			
Y9Ð. ¤f LDI ¤ DwL Ð	[illegible]	. ⊡D	D/t	t[w	a		ŵ		ƽ									{! [9! . [9			
Y9Ð. ¤f LDI ¤ DwL Ð	[illegible]	. ⊡D	D/t	t[w	a				ƽ									{! [9! . [9			
Y9Ð! ☞[! /Y	[illegible]	! ⊡[Y	D/t	t[w	a	ƺ			ƽ									{! [9! . [9			

molex

a AE-ﾈﾇｲｶAEｺ [! 59{9! [95 ! {{9a . [Ða ! ¤{9! [. ha ! b5 tLb h- ¤{I 99¤

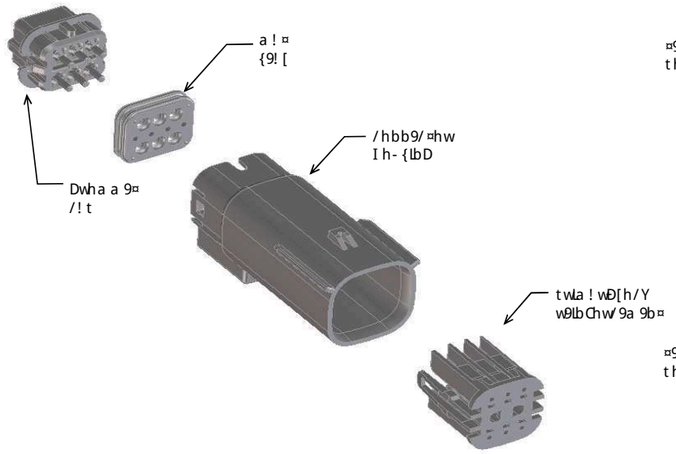

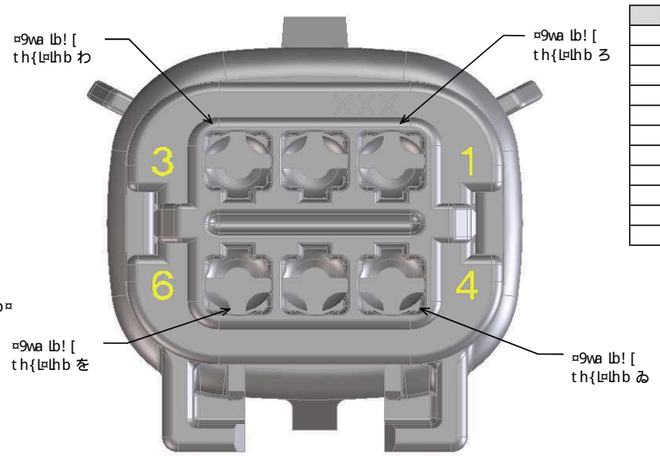

! . . w9¹ L! ¤lhb	59{/wLt ¤lhb	/h[hw	a ! ¤9wL! [
! ⊡[Y	I h- {lbD¤Y9ÐlbD ht¤lhb !	. [! /Y	{t{ JbÐ[hb DC#ｵ
. ÐD	I h- {lbD¤Y9ÐlbD ht¤lhb .	[lDI ¤ Dwl Ð	{t{ JbÐ[hb DC#ｵ
/ ⊡w	I h- {lbD¤Y9ÐlbD ht¤lhb /	. wh° b	{t{ JbÐ[hb DC#ｵ
5 ⊡w	I h- {lbD¤Y9ÐlbD ht¤lhb 5	Dw99b	{t{ JbÐ[hb DC#ｵ
/ 5D	I h- {lbD¤Y9ÐlbD ht¤lhb /	5! wY Dwl Ð	{t{ JbÐ[hb DC#ｵ
5 ÐD	I h- {lbD¤Y9ÐlbD ht¤lhb 5	{¤hb9 Dwl Ð	{t{ JbÐ[hb DC#ｵ
! ÐP	I h- {lbD¤Y9ÐlbD ht¤lhb !	Ð9[[h°	{t{ JbÐ[hb DC#ｵ
D/	Dwha a 9¤/! t {¤! b5! w5、	. [! /Y	{t{ JbÐ[hb DC#ｵ
D/[	Dwha a 9¤/! t [9bD¤I 9b95、	. [! /Y	{t{ JbÐ[hb DC#ｵ
t[w	t[w	b! ¤- wl [	{t{ JbÐ[hb DC#ｵ
a	a ! ¤{9! [	whÐ! [. [- 9	LbI 9w9b¤[Ð[- . wL/! ¤95 {l[L/hb9

! {{9a . [Ð59{/wLt ¤lhb	! {{9a . [Ð t! w¤ b- a . 9w	/ha thb9b¤				. [h/Y95 ¤9wa lb! [{										{¤! ¤- {	/ha a 9b¤{	ht¤lhb! [! ¤¤! ¤/I a 9b¤{ {h[5 {9t 9wl ¤9[Ð	
		¤I 9 tw9{9b/9 hC! b ! . . w9¹ L! ¤lhb lb5L/! ¤9{ ¤I 9 tw9{9b/9 hC¤I ! ¤/ha thb9b¤☆				/! ¹ L¤Ð° L¤I ! b- a . 9wlb5L/! ¤9{ . [h/Y95 ¤9wa lb! [th{L¤lhb /! ¹ L¤Ð° L¤I h- ¤! b- a . 9wlb5L/! ¤9{ ht9b ¤9wa lb! [th{L¤lhb													
		I h- {lbD Y9Ð⊻h[hw	Dwha a 9¤ /! t	t[w	a ! ¤{9! [	ろ	わ	わ	ゐ	ゑ	を									.! /Y{I 9[[° L¤I wL {	.! /Y{I 9[[° L¤I h- ¤ wL {
Y9Ð! ¤r [! /Y	ｵｶｷｸｹｺｻｼｽｾｿﾀﾁﾂﾃﾄﾅﾆﾇﾈﾉﾊﾋﾌﾍﾎﾏﾐﾑﾒﾓﾔﾕﾖﾗﾘﾙﾚﾛﾜﾝﾞﾟ	! ⊡[Y	D/	t[w	a												{! [9! . [9		ｵｶｷｸｹｺｻｼｽｾｿﾀﾁﾂﾃﾄﾅﾆﾇﾈﾉﾊﾋﾌﾍﾎﾏﾐﾑﾒﾓﾔﾕﾖﾗﾘﾙﾚﾛﾜﾝﾞﾟ	ｵｶｷｸｹｺｻｼｽｾｿﾀﾁﾂﾃﾄﾅﾆﾇﾈﾉﾊﾋﾌﾍﾎﾏﾐﾑﾒﾓﾔﾕﾖﾗﾘﾙﾚﾛﾜﾝﾞﾟ
Y9Ð. ¤f LDI ¤ Dwl Ð	ｵｶｷｸｹｺｻｼｽｾｿﾀﾁﾂﾃﾄﾅﾆﾇﾈﾉﾊﾋﾌﾍﾎﾏﾐﾑﾒﾓﾔﾕﾖﾗﾘﾙﾚﾛﾜﾝﾞﾟ	. ÐD	D/	t[w	a												{! [9! . [9		ｵｶｷｸｹｺｻｼｽｾｿﾀﾁﾂﾃﾄﾅﾆﾇﾈﾉﾊﾋﾌﾍﾎﾏﾐﾑﾒﾓﾔﾕﾖﾗﾘﾙﾚﾛﾜﾝﾞﾟ	ｵｶｷｸｹｺｻｼｽｾｿﾀﾁﾂﾃﾄﾅﾆﾇﾈﾉﾊﾋﾌﾍﾎﾏﾐﾑﾒﾓﾔﾕﾖﾗﾘﾙﾚﾛﾜﾝﾞﾟ
Y9Ð/ ¤r wh° b	ｵｶｷｸｹｺｻｼｽｾｿﾀﾁﾂﾃﾄﾅﾆﾇﾈﾉﾊﾋﾌﾍﾎﾏﾐﾑﾒﾓﾔﾕﾖﾗﾘﾙﾚﾛﾜﾝﾞﾟ	/ ⊡w	D/	t[w	a			ｶ									bh¤ w9/ ha a 9b595	{99 ｵｶｷｸｹｺｻｼｽｾｿﾀﾁﾂﾃﾄﾅﾆﾇﾈﾉﾊﾋﾌﾍﾎﾏﾐﾑﾒﾓﾔﾕﾖﾗﾘﾙﾚﾛﾜﾝﾞﾟ	ｵｶｷｸｹｺｻｼｽｾｿﾀﾁﾂﾃﾄﾅﾆﾇﾈﾉﾊﾋﾌﾍﾎﾏﾐﾑﾒﾓﾔﾕﾖﾗﾘﾙﾚﾛﾜﾝﾞﾟ	ｵｶｷｸｹｺｻｼｽｾｿﾀﾁﾂﾃﾄﾅﾆﾇﾈﾉﾊﾋﾌﾍﾎﾏﾐﾑﾒﾓﾔﾕﾖﾗﾘﾙﾚﾛﾜﾝﾞﾟ
Y9D5¤ÐW99b	ｵｶｷｸｹｺｻｼｽｾｿﾀﾁﾂﾃﾄﾅﾆﾇﾈﾉﾊﾋﾌﾍﾎﾏﾐﾑﾒﾓﾔﾕﾖﾗﾘﾙﾚﾛﾜﾝﾞﾟ	5 ⊡w	D/	t[w	a			ｶ									bh¤ w9/ ha a 9b595	{99 ｵｶｷｸｹｺｻｼｽｾｿﾀﾁﾂﾃﾄﾅﾆﾇﾈﾉﾊﾋﾌﾍﾎﾏﾐﾑﾒﾓﾔﾕﾖﾗﾘﾙﾚﾛﾜﾝﾞﾟ	ｵｶｷｸｹｺｻｼｽｾｿﾀﾁﾂﾃﾄﾅﾆﾇﾈﾉﾊﾋﾌﾍﾎﾏﾐﾑﾒﾓﾔﾕﾖﾗﾘﾙﾚﾛﾜﾝﾞﾟ	ｵｶｷｸｹｺｻｼｽｾｿﾀﾁﾂﾃﾄﾅﾆﾇﾈﾉﾊﾋﾌﾍﾎﾏﾐﾑﾒﾓﾔﾕﾖﾗﾘﾙﾚﾛﾜﾝﾞﾟ
¹ h l5 Y9E	ｵｶｷｸｹｺｻｼｽｾｿﾀﾁﾂﾃﾄﾅﾆﾇﾈﾉﾊﾋﾌﾍﾎﾏﾐﾑﾒﾓﾔﾕﾖﾗﾘﾙﾚﾛﾜﾝﾞﾟ																				
Y9Ð! ¤r [! /Y	ｵｶｷｸｹｺｻｼｽｾｿﾀﾁﾂﾃﾄﾅﾆﾇﾈﾉﾊﾋﾌﾍﾎﾏﾐﾑﾒﾓﾔﾕﾖﾗﾘﾙﾚﾛﾜﾝﾞﾟ	! ⊡[Y	D/	t[w	a			ｷ									{! [9! . [9		ｵｶｷｸｹｺｻｼｽｾｿﾀﾁﾂﾃﾄﾅﾆﾇﾈﾉﾊﾋﾌﾍﾎﾏﾐﾑﾒﾓﾔﾕﾖﾗﾘﾙﾚﾛﾜﾝﾞﾟ	ｵｶｷｸｹｺｻｼｽｾｿﾀﾁﾂﾃﾄﾅﾆﾇﾈﾉﾊﾋﾌﾍﾎﾏﾐﾑﾒﾓﾔﾕﾖﾗﾘﾙﾚﾛﾜﾝﾞﾟ
Y9Ð. ¤f LDI ¤ Dwl Ð	ｵｶｷｸｹｺｻｼｽｾｿﾀﾁﾂﾃﾄﾅﾆﾇﾈﾉﾊﾋﾌﾍﾎﾏﾐﾑﾒﾓﾔﾕﾖﾗﾘﾙﾚﾛﾜﾝﾞﾟ	. ÐD	D/	t[w	a			ｷ									{! [9! . [9		ｵｶｷｸｹｺｻｼｽｾｿﾀﾁﾂﾃﾄﾅﾆﾇﾈﾉﾊﾋﾌﾍﾎﾏﾐﾑﾒﾓﾔﾕﾖﾗﾘﾙﾚﾛﾜﾝﾞﾟ	ｵｶｷｸｹｺｻｼｽｾｿﾀﾁﾂﾃﾄﾅﾆﾇﾈﾉﾊﾋﾌﾍﾎﾏﾐﾑﾒﾓﾔﾕﾖﾗﾘﾙﾚﾛﾜﾝﾞﾟ
Y9Ð/ ¤r wh° b	ｵｶｷｸｹｺｻｼｽｾｿﾀﾁﾂﾃﾄﾅﾆﾇﾈﾉﾊﾋﾌﾍﾎﾏﾐﾑﾒﾓﾔﾕﾖﾗﾘﾙﾚﾛﾜﾝﾞﾟ	/ ⊡w	D/	t[w	a			ｷ									bh¤ w9/ ha a 9b595	{99 ｵｶｷｸｹｺｻｼｽｾｿﾀﾁﾂﾃﾄﾅﾆﾇﾈﾉﾊﾋﾌﾍﾎﾏﾐﾑﾒﾓﾔﾕﾖﾗﾘﾙﾚﾛﾜﾝﾞﾟ	ｵｶｷｸｹｺｻｼｽｾｿﾀﾁﾂﾃﾄﾅﾆﾇﾈﾉﾊﾋﾌﾍﾎﾏﾐﾑﾒﾓﾔﾕﾖﾗﾘﾙﾚﾛﾜﾝﾞﾟ	ｵｶｷｸｹｺｻｼｽｾｿﾀﾁﾂﾃﾄﾅﾆﾇﾈﾉﾊﾋﾌﾍﾎﾏﾐﾑﾒﾓﾔﾕﾖﾗﾘﾙﾚﾛﾜﾝﾞﾟ
Y9D5¤ÐW99b	ｵｶｷｸｹｺｻｼｽｾｿﾀﾁﾂﾃﾄﾅﾆﾇﾈﾉﾊﾋﾌﾍﾎﾏﾐﾑﾒﾓﾔﾕﾖﾗﾘﾙﾚﾛﾜﾝﾞﾟ	5 ⊡w	D/	t[w	a			ｷ									bh¤ w9/ ha a 9b595	{99 ｵｶｷｸｹｺｻｼｽｾｿﾀﾁﾂﾃﾄﾅﾆﾇﾈﾉﾊﾋﾌﾍﾎﾏﾐﾑﾒﾓﾔﾕﾖﾗﾘﾙﾚﾛﾜﾝﾞﾟ	ｵｶｷｸｹｺｻｼｽｾｿﾀﾁﾂﾃﾄﾅﾆﾇﾈﾉﾊﾋﾌﾍﾎﾏﾐﾑﾒﾓﾔﾕﾖﾗﾘﾙﾚﾛﾜﾝﾞﾟ	ｵｶｷｸｹｺｻｼｽｾｿﾀﾁﾂﾃﾄﾅﾆﾇﾈﾉﾊﾋﾌﾍﾎﾏﾐﾑﾒﾓﾔﾕﾖﾗﾘﾙﾚﾛﾜﾝﾞﾟ
¹ h l5 Y9E	ｵｶｷｸｹｺｻｼｽｾｿﾀﾁﾂﾃﾄﾅﾆﾇﾈﾉﾊﾋﾌﾍﾎﾏﾐﾑﾒﾓﾔﾕﾖﾗﾘﾙﾚﾛﾜﾝﾞﾟ																				
Y9Ð! ¤r [! /Y	ｵｶｷｸｹｺｻｼｽｾｿﾀﾁﾂﾃﾄﾅﾆﾇﾈﾉﾊﾋﾌﾍﾎﾏﾐﾑﾒﾓﾔﾕﾖﾗﾘﾙﾚﾛﾜﾝﾞﾟ	! ⊡[Y	D/	t[w	a			ｷ	ｱ								{! [9! . [9		ｵｶｷｸｹｺｻｼｽｾｿﾀﾁﾂﾃﾄﾅﾆﾇﾈﾉﾊﾋﾌﾍﾎﾏﾐﾑﾒﾓﾔﾕﾖﾗﾘﾙﾚﾛﾜﾝﾞﾟ	ｵｶｷｸｹｺｻｼｽｾｿﾀﾁﾂﾃﾄﾅﾆﾇﾈﾉﾊﾋﾌﾍﾎﾏﾐﾑﾒﾓﾔﾕﾖﾗﾘﾙﾚﾛﾜﾝﾞﾟ
Y9Ð. ¤f LDI ¤ Dwl Ð	ｵｶｷｸｹｺｻｼｽｾｿﾀﾁﾂﾃﾄﾅﾆﾇﾈﾉﾊﾋﾌﾍﾎﾏﾐﾑﾒﾓﾔﾕﾖﾗﾘﾙﾚﾛﾜﾝﾞﾟ	. ÐD	D/	t[w	a			ｷ	ｱ								{! [9! . [9		ｵｶｷｸｹｺｻｼｽｾｿﾀﾁﾂﾃﾄﾅﾆﾇﾈﾉﾊﾋﾌﾍﾎﾏﾐﾑﾒﾓﾔﾕﾖﾗﾘﾙﾚﾛﾜﾝﾞﾟ	ｵｶｷｸｹｺｻｼｽｾｿﾀﾁﾂﾃﾄﾅﾆﾇﾈﾉﾊﾋﾌﾍﾎﾏﾐﾑﾒﾓﾔﾕﾖﾗﾘﾙﾚﾛﾜﾝﾞﾟ
Y9Ð/ ¤r wh° b	ｵｶｷｸｹｺｻｼｽｾｿﾀﾁﾂﾃﾄﾅﾆﾇﾈﾉﾊﾋﾌﾍﾎﾏﾐﾑﾒﾓﾔﾕﾖﾗﾘﾙﾚﾛﾜﾝﾞﾟ	/ ⊡w	D/	t[w	a			ｷ	ｱ								bh¤ w9/ ha a 9b595	{99 ｵｶｷｸｹｺｻｼｽｾｿﾀﾁﾂﾃﾄﾅﾆﾇﾈﾉﾊﾋﾌﾍﾎﾏﾐﾑﾒﾓﾔﾕﾖﾗﾘﾙﾚﾛﾜﾝﾞﾟ	ｵｶｷｸｹｺｻｼｽｾｿﾀﾁﾂﾃﾄﾅﾆﾇﾈﾉﾊﾋﾌﾍﾎﾏﾐﾑﾒﾓﾔﾕﾖﾗﾘﾙﾚﾛﾜﾝﾞﾟ	ｵｶｷｸｹｺｻｼｽｾｿﾀﾁﾂﾃﾄﾅﾆﾇﾈﾉﾊﾋﾌﾍﾎﾏﾐﾑﾒﾓﾔﾕﾖﾗﾘﾙﾚﾛﾜﾝﾞﾟ
Y9D5¤ÐW99b	ｵｶｷｸｹｺｻｼｽｾｿﾀﾁﾂﾃﾄﾅﾆﾇﾈﾉﾊﾋﾌﾍﾎﾏﾐﾑﾒﾓﾔﾕﾖﾗﾘﾙﾚﾛﾜﾝﾞﾟ	5 ⊡w	D/	t[w	a			ｷ	ｱ								bh¤ w9/ ha a 9b595	{99 ｵｶｷｸｹｺｻｼｽｾｿﾀﾁﾂﾃﾄﾅﾆﾇﾈﾉﾊﾋﾌﾍﾎﾏﾐﾑﾒﾓﾔﾕﾖﾗﾘﾙﾚﾛﾜﾝﾞﾟ	ｵｶｷｸｹｺｻｼｽｾｿﾀﾁﾂﾃﾄﾅﾆﾇﾈﾉﾊﾋﾌﾍﾎﾏﾐﾑﾒﾓﾔﾕﾖﾗﾘﾙﾚﾛﾜﾝﾞﾟ	ｵｶｷｸｹｺｻｼｽｾｿﾀﾁﾂﾃﾄﾅﾆﾇﾈﾉﾊﾋﾌﾍﾎﾏﾐﾑﾒﾓﾔﾕﾖﾗﾘﾙﾚﾛﾜﾝﾞﾟ
¹ h l5 Y9E	ｵｶｷｸｹｺｻｼｽｾｿﾀﾁﾂﾃﾄﾅﾆﾇﾈﾉﾊﾋﾌﾍﾎﾏﾐﾑﾒﾓﾔﾕﾖﾗﾘﾙﾚﾛﾜﾝﾞﾟ																				
Y9Ð! ¤r [! /Y	ｵｶｷｸｹｺｻｼｽｾｿﾀﾁﾂﾃﾄﾅﾆﾇﾈﾉﾊﾋﾌﾍﾎﾏﾐﾑﾒﾓﾔﾕﾖﾗﾘﾙﾚﾛﾜﾝﾞﾟ	! ⊡[Y	D/	t[w	a			ｷ									{! [9! . [9		ｵｶｷｸｹｺｻｼｽｾｿﾀﾁﾂﾃﾄﾅﾆﾇﾈﾉﾊﾋﾌﾍﾎﾏﾐﾑﾒﾓﾔﾕﾖﾗﾘﾙﾚﾛﾜﾝﾞﾟ	ｵｶｷｸｹｺｻｼｽｾｿﾀﾁﾂﾃﾄﾅﾆﾇﾈﾉﾊﾋﾌﾍﾎﾏﾐﾑﾒﾓﾔﾕﾖﾗﾘﾙﾚﾛﾜﾝﾞﾟ
Y9Ð! ¤r [! /Y	ｵｶｷｸｹｺｻｼｽｾｿﾀﾁﾂﾃﾄﾅﾆﾇﾈﾉﾊﾋﾌﾍﾎﾏﾐﾑﾒﾓﾔﾕﾖﾗﾘﾙﾚﾛﾜﾝﾞﾟ	! ⊡[Y	D/	t[w	a		ｷ										{! [9! . [9		ｵｶｷｸｹｺｻｼｽｾｿﾀﾁﾂﾃﾄﾅﾆﾇﾈﾉﾊﾋﾌﾍﾎﾏﾐﾑﾒﾓﾔﾕﾖﾗﾘﾙﾚﾛﾜﾝﾞﾟ	ｵｶｷｸｹｺｻｼｽｾｿﾀﾁﾂﾃﾄﾅﾆﾇﾈﾉﾊﾋﾌﾍﾎﾏﾐﾑﾒﾓﾔﾕﾖﾗﾘﾙﾚﾛﾜﾝﾞﾟ
Y9Ð! ¤r [! /Y	ｵｶｷｸｹｺｻｼｽｾｿﾀﾁﾂﾃﾄﾅﾆﾇﾈﾉﾊﾋﾌﾍﾎﾏﾐﾑﾒﾓﾔﾕﾖﾗﾘﾙﾚﾛﾜﾝﾞﾟ	! ⊡[Y	D/	t[w	a				ｷ									{! [9! . [9		ｵｶｷｸｹｺｻｼｽｾｿﾀﾁﾂﾃﾄﾅﾆﾇﾈﾉﾊﾋﾌﾍﾎﾏﾐﾑﾒﾓﾔﾕﾖﾗﾘﾙﾚﾛﾜﾝﾞﾟ	ｵｶｷｸｹｺｻｼｽｾｿﾀﾁﾂﾃﾄﾅﾆﾇﾈﾉﾊﾋﾌﾍﾎﾏﾐﾑﾒﾓﾔﾕﾖﾗﾘﾙﾚﾛﾜﾝﾞﾟ
Y9Ð! ¤r [! /Y	ｵｶｷｸｹｺｻｼｽｾｿﾀﾁﾂﾃﾄﾅﾆﾇﾈﾉﾊﾋﾌﾍﾎﾏﾐﾑﾒﾓﾔﾕﾖﾗﾘﾙﾚﾛﾜﾝﾞﾟ	! ⊡[Y	D/	t[w	a					ｷ	ｿ						{! [9! . [9		ｵｶｷｸｹｺｻｼｽｾｿﾀﾁﾂﾃﾄﾅﾆﾇﾈﾉﾊﾋﾌﾍﾎﾏﾐﾑﾒﾓﾔﾕﾖﾗﾘﾙﾚﾛﾜﾝﾞﾟ	ｵｶｷｸｹｺｻｼｽｾｿﾀﾁﾂﾃﾄﾅﾆﾇﾈﾉﾊﾋﾌﾍﾎﾏﾐﾑﾒﾓﾔﾕﾖﾗﾘﾙﾚﾛﾜﾝﾞﾟ
Y9Ð! ¤r [! /Y	ｵｶｷｸｹｺｻｼｽｾｿﾀﾁﾂﾃﾄﾅﾆﾇﾈﾉﾊﾋﾌﾍﾎﾏﾐﾑﾒﾓﾔﾕﾖﾗﾘﾙﾚﾛﾜﾝﾞﾟ	! ⊡[Y	D/	t[w	a	ﾆ				ｷ	ｿ						{! [9! . [9		ｵｶｷｸｹｺｻｼｽｾｿﾀﾁﾂﾃﾄﾅﾆﾇﾈﾉﾊﾋﾌﾍﾎﾏﾐﾑﾒﾓﾔﾕﾖﾗﾘﾙﾚﾛﾜﾝﾞﾟ	ｵｶｷｸｹｺｻｼｽｾｿﾀﾁﾂﾃﾄﾅﾆﾇﾈﾉﾊﾋﾌﾍﾎﾏﾐﾑﾒﾓﾔﾕﾖﾗﾘﾙﾚﾛﾜﾝﾞﾟ
Y9Ð! ¤r [! /Y	ｵｶｷｸｹｺｻｼｽｾｿﾀﾁﾂﾃﾄﾅﾆﾇﾈﾉﾊﾋﾌﾍﾎﾏﾐﾑﾒﾓﾔﾕﾖﾗﾘﾙﾚﾛﾜﾝﾞﾟ	! ⊡[Y	D/	t[w	a	ﾆ				ｷ							{! [9! . [9		ｵｶｷｸｹｺｻｼｽｾｿﾀﾁﾂﾃﾄﾅﾆﾇﾈﾉﾊﾋﾌﾍﾎﾏﾐﾑﾒﾓﾔﾕﾖﾗﾘﾙﾚﾛﾜﾝﾞﾟ	ｵｶｷｸｹｺｻｼｽｾｿﾀﾁﾂﾃﾄﾅﾆﾇﾈﾉﾊﾋﾌﾍﾎﾏﾐﾑﾒﾓﾔﾕﾖﾗﾘﾙﾚﾛﾜﾝﾞﾟ
Y9Ð! ¤r [! /Y	ｵｶｷｸｹｺｻｼｽｾｿﾀﾁﾂﾃﾄﾅﾆﾇﾈﾉﾊﾋﾌﾍﾎﾏﾐﾑﾒﾓﾔﾕﾖﾗﾘﾙﾚﾛﾜﾝﾞﾟ	! ⊡[Y	D/	t[w	a			ｷ			ｿ						{! [9! . [9		ｵｶｷｸｹｺｻｼｽｾｿﾀﾁﾂﾃﾄﾅﾆﾇﾈﾉﾊﾋﾌﾍﾎﾏﾐﾑﾒﾓﾔﾕﾖﾗﾘﾙﾚﾛﾜﾝﾞﾟ	ｵｶｷｸｹｺｻｼｽｾｿﾀﾁﾂﾃﾄﾅﾆﾇﾈﾉﾊﾋﾌﾍﾎﾏﾐﾑﾒﾓﾔﾕﾖﾗﾘﾙﾚﾛﾜﾝﾞﾟ
Y9Ð/ ¤r wl Dwl Ð	ｵｶｷｸｹｺｻｼｽｾｿﾀﾁﾂﾃﾄﾅﾆﾇﾈﾉﾊﾋﾌﾍﾎﾏﾐﾑﾒﾓﾔﾕﾖﾗﾘﾙﾚﾛﾜﾝﾞﾟ	/ 5D	D/	t[w	a				ｷ								{! [9! . [9		ｵｶｷｸｹｺｻｼｽｾｿﾀﾁﾂﾃﾄﾅﾆﾇﾈﾉﾊﾋﾌﾍﾎﾏﾐﾑﾒﾓﾔﾕﾖﾗﾘﾙﾚﾛﾜﾝﾞﾟ	ｵｶｷｸｹｺｻｼｽｾｿﾀﾁﾂﾃﾄﾅﾆﾇﾈﾉﾊﾋﾌﾍﾎﾏﾐﾑﾒﾓﾔﾕﾖﾗﾘﾙﾚﾛﾜﾝﾞﾟ
Y9D5¤f h b9 Dwl Ð	ｵｶｷｸｹｺｻｼｽｾｿﾀﾁﾂﾃﾄﾅﾆﾇﾈﾉﾊﾋﾌﾍﾎﾏﾐﾑﾒﾓﾔﾕﾖﾗﾘﾙﾚﾛﾜﾝﾞﾟ	5 ÐD	D/	t[w	a												{! [9! . [9		ｵｶｷｸｹｺｻｼｽｾｿﾀﾁﾂﾃﾄﾅﾆﾇﾈﾉﾊﾋﾌﾍﾎﾏﾐﾑﾒﾓﾔﾕﾖﾗﾘﾙﾚﾛﾜﾝﾞﾟ	ｵｶｷｸｹｺｻｼｽｾｿﾀﾁﾂﾃﾄﾅﾆﾇﾈﾉﾊﾋﾌﾍﾎﾏﾐﾑﾒﾓﾔﾕﾖﾗﾘﾙﾚﾛﾜﾝﾞﾟ
Y9Ð! ¤r [! /Y	ｵｶｷｸｹｺｻｼｽｾｿﾀﾁﾂﾃﾄﾅﾆﾇﾈﾉﾊﾋﾌﾍﾎﾏﾐﾑﾒﾓﾔﾕﾖﾗﾘﾙﾚﾛﾜﾝﾞﾟ	! ⊡[Y	D/ [	t[w	a												{! [9! . [9		ｵｶｷｸｹｺｻｼｽｾｿﾀﾁﾂﾃﾄﾅﾆﾇﾈﾉﾊﾋﾌﾍﾎﾏﾐﾑﾒﾓﾔﾕﾖﾗﾘﾙﾚﾛﾜﾝﾞﾟ	ｵｶｷｸｹｺｻｼｽｾｿﾀﾁﾂﾃﾄﾅﾆﾇﾈﾉﾊﾋﾌﾍﾎﾏﾐﾑﾒﾓﾔﾕﾖﾗﾘﾙﾚﾛﾜﾝﾞﾟ
Y9Ð. ¤f LDI ¤ Dwl Ð	ｵｶｷｸｹｺｻｼｽｾｿﾀﾁﾂﾃﾄﾅﾆﾇﾈﾉﾊﾋﾌﾍﾎﾏﾐﾑﾒﾓﾔﾕﾖﾗﾘﾙﾚﾛﾜﾝﾞﾟ	. ÐD	D/ [	t[w	a												{! [9! . [9		ｵｶｷｸｹｺｻｼｽｾｿﾀﾁﾂﾃﾄﾅﾆﾇﾈﾉﾊﾋﾌﾍﾎﾏﾐﾑﾒﾓﾔﾕﾖﾗﾘﾙﾚﾛﾜﾝﾞﾟ	ｵｶｷｸｹｺｻｼｽｾｿﾀﾁﾂﾃﾄﾅﾆﾇﾈﾉﾊﾋﾌﾍﾎﾏﾐﾑﾒﾓﾔﾕﾖﾗﾘﾙﾚﾛﾜﾝﾞﾟ
Y9Ð/ ¤r wl Dwl Ð	ｵｶｷｸｹｺｻｼｽｾｿﾀﾁﾂﾃﾄﾅﾆﾇﾈﾉﾊﾋﾌﾍﾎﾏﾐﾑﾒﾓﾔﾕﾖﾗﾘﾙﾚﾛﾜﾝﾞﾟ	/ 5D	D/ [	t[w	a												{! [9! . [9		ｵｶｷｸｹｺｻｼｽｾｿﾀﾁﾂﾃﾄﾅﾆﾇﾈﾉﾊﾋﾌﾍﾎﾏﾐﾑﾒﾓﾔﾕﾖﾗﾘﾙﾚﾛﾜﾝﾞﾟ	ｵｶｷｸｹｺｻｼｽｾｿﾀﾁﾂﾃﾄﾅﾆﾇﾈﾉﾊﾋﾌﾍﾎﾏﾐﾑﾒﾓﾔﾕﾖﾗﾘﾙﾚﾛﾜﾝﾞﾟ
Y9D5¤f h b9 Dwl Ð	ｵｶｷｸｹｺｻｼｽｾｿﾀﾁﾂﾃﾄﾅﾆﾇﾈﾉﾊﾋﾌﾍﾎﾏﾐﾑﾒﾓﾔﾕﾖﾗﾘﾙﾚﾛﾜﾝﾞﾟ	5 ÐD	D/ [	t[w	a												{! [9! . [9		ｵｶｷｸｹｺｻｼｽｾｿﾀﾁﾂﾃﾄﾅﾆﾇﾈﾉﾊﾋﾌﾍﾎﾏﾐﾑﾒﾓﾔﾕﾖﾗﾘﾙﾚﾛﾜﾝﾞﾟ	ｵｶｷｸｹｺｻｼｽｾｿﾀﾁﾂﾃﾄﾅﾆﾇﾈﾉﾊﾋﾌﾍﾎﾏﾐﾑﾒﾓﾔﾕﾖﾗﾘﾙﾚﾛﾜﾝﾞﾟ
Y9Ð/ ¤r wl Dwl Ð	ｵｶｷｸｹｺｻｼｽｾｿﾀﾁﾂﾃﾄﾅﾆﾇﾈﾉﾊﾋﾌﾍﾎﾏﾐﾑﾒﾓﾔﾕﾖﾗﾘﾙﾚﾛﾜﾝﾞﾟ	/ 5D	D/ [	t[w	a			ｷ									{! [9! . [9		ｵｶｷｸｹｺｻｼｽｾｿﾀﾁﾂﾃﾄﾅﾆﾇﾈﾉﾊﾋﾌﾍﾎﾏﾐﾑﾒﾓﾔﾕﾖﾗﾘﾙﾚﾛﾜﾝﾞﾟ	ｵｶｷｸｹｺｻｼｽｾｿﾀﾁﾂﾃﾄﾅﾆﾇﾈﾉﾊﾋﾌﾍﾎﾏﾐﾑﾒﾓﾔﾕﾖﾗﾘﾙﾚﾛﾜﾝﾞﾟ
Y9Ð! ¤r [! /Y	ｵｶｷｸｹｺｻｼｽｾｿﾀﾁﾂﾃﾄﾅﾆﾇﾈﾉﾊﾋﾌﾍﾎﾏﾐﾑﾒﾓﾔﾕﾖﾗﾘﾙﾚﾛﾜﾝﾞﾟ	! ⊡[Y	D/ [	t[w	a			ｷ									{! [9! . [9		ｵｶｷｸｹｺｻｼｽｾｿﾀﾁﾂﾃﾄﾅﾆﾇﾈﾉﾊﾋﾌﾍﾎﾏﾐﾑﾒﾓﾔﾕﾖﾗﾘﾙﾚﾛﾜﾝﾞﾟ	ｵｶｷｸｹｺｻｼｽｾｿﾀﾁﾂﾃﾄﾅﾆﾇﾈﾉﾊﾋﾌﾍﾎﾏﾐﾑﾒﾓﾔﾕﾖﾗﾘﾙﾚﾛﾜﾝﾞﾟ
Y9Ð! ¤r [! /Y	ｵｶｷｸｹｺｻｼｽｾｿﾀﾁﾂﾃﾄﾅﾆﾇﾈﾉﾊﾋﾌﾍﾎﾏﾐﾑﾒﾓﾔﾕﾖﾗﾘﾙﾚﾛﾜﾝﾞﾟ	! ⊡[Y	D/	t[w	a						ｿ						{! [9! . [9		ｵｶｷｸｹｺｻｼｽｾｿﾀﾁﾂﾃﾄﾅﾆﾇﾈﾉﾊﾋﾌﾍﾎﾏﾐﾑﾒﾓﾔﾕﾖﾗﾘﾙﾚﾛﾜﾝﾞﾟ	ｵｶｷｸｹｺｻｼｽｾｿﾀﾁﾂﾃﾄﾅﾆﾇﾈﾉﾊﾋﾌﾍﾎﾏﾐﾑﾒﾓﾔﾕﾖﾗﾘﾙﾚﾛﾜﾝﾞﾟ
Y9Ð! ¤r [! /Y	ｵｶｷｸｹｺｻｼｽｾｿﾀﾁﾂﾃﾄﾅﾆﾇﾈﾉﾊﾋﾌﾍﾎﾏﾐﾑﾒﾓﾔﾕﾖﾗﾘﾙﾚﾛﾜﾝﾞﾟ	! ⊡[Y	D/	t[w	a			ｷ	ｱ	ｷ	ｿ						{! [9! . [9		ｵｶｷｸｹｺｻｼｽｾｿﾀﾁﾂﾃﾄﾅﾆﾇﾈﾉﾊﾋﾌﾍﾎﾏﾐﾑﾒﾓﾔﾕﾖﾗﾘﾙﾚﾛﾜﾝﾞﾟ	ｵｶｷｸｹｺｻｼｽｾｿﾀﾁﾂﾃﾄﾅﾆﾇﾈﾉﾊﾋﾌﾍﾎﾏﾐﾑﾒﾓﾔﾕﾖﾗﾘﾙﾚﾛﾜﾝﾞﾟ

molex

a [illegible] [! 59{9! [95!{{9a.[Ða!¤{9! [
.ha !b5 tLb h-¤{I 99¤

!{{9a.[Ð59{/wLt¤Lhb	!{{9a.[Ð t!w¤b-a.9w	/ha thb9b¤				.[h/Y95 ¤9wa Lb![{											{¤!¤-{	/ha a 9b¤{	ht¤Lhb![!¤¤!¤/I a 9b¤{ {h[5{9t9w!¤9[Ð	
		¤I 9tw9{9b/9hC!b!..w9¹L!¤Lhb Lb5L/!¤9{ ¤I 9 tw9{9b/9hC¤I!¤/ha thb9b¤				/!¹L¤Ð° L¤I ! b-a.9wLb5L/!¤9{.[h/Y95 ¤9wa Lb![th{L¤Lhb /!¹L¤Ð° L¤I h-¤! b-a.9wLb5L/!¤9{ ht9b ¤9wa Lb![th{L¤Lhb														
		I h-{LbD Y9Ð[illegible]h[hw	Dwha a 9¤ /!t	t[w	a!¤{9![	ろ	ゎ	わ	ゐ	ゑ	を								.!/Y{I 9[[° L¤I wL{	.!/Y{I 9[[° L¤I h-¤ wL{
Y9Ð!¤[!/Y	[illegible]	![illegible][Y	D/	t[w	a		[illegible]	[illegible]									{![9!.[9		[illegible]	[illegible]
Y9Ð.¤[LDI ¤DwL£	[illegible]	.[illegible]D	D/	t[w	a		[illegible]	[illegible]									{![9!.[9		[illegible]	[illegible]
Y9Ð/¤5!wY DwL£	[illegible]	/[illegible]D	D/	t[w	a						[illegible]						{![9!.[9		[illegible]	[illegible]
Y9Ð!¤[!/Y	[illegible]	![illegible][Y	D/	t[w	a				[illegible]		[illegible]						{![9!.[9		[illegible]	[illegible]
Y9Ð!¤[!/Y	[illegible]	![illegible][Y	D/	t[w	a	[illegible]		[illegible]		[illegible]							{![9!.[9		[illegible]	[illegible]
Y9Ð!¤[!/Y	[illegible]	![illegible][Y	D/	t[w	a		[illegible]		[illegible]		[illegible]						{![9!.[9		[illegible]	[illegible]
Y9Ð!¤[!/Y	[illegible]	![illegible][Y	D/	t[w	a	[illegible]					[illegible]						{![9!.[9		[illegible]	[illegible]
Y9Ð!¤[!/Y	[illegible]	![illegible][Y	D/	t[w	a		[illegible]			[illegible]							{![9!.[9		[illegible]	[illegible]
Y9Ð!¤[!/Y	[illegible]	![illegible][Y	D/	t[w	a	[illegible]		[illegible]	[illegible]								{![9!.[9		[illegible]	[illegible]
Y9Ð!¤[!/Y	[illegible]	![illegible][Y	D/	t[w	a	[illegible]	[illegible]	[illegible]		[illegible]	[illegible]						{![9!.[9		[illegible]	[illegible]
Y9Ð!¤[!/Y	[illegible]	![illegible][Y	D/	t[w	a	[illegible]	[illegible]	[illegible]									{![9!.[9		[illegible]	[illegible]
Y9Ð!¤[!/Y	[illegible]	![illegible][Y	D/	t[w	a				[illegible]	[illegible]							{![9!.[9		[illegible]	[illegible]
Y9Ð!¤[!/Y	[illegible]	![illegible][Y	D/	t[w	a	[illegible]											{![9!.[9		[illegible]	[illegible]
Y9Ð.¤[LDI ¤DwL£	[illegible]	.[illegible]D	D/	t[w	a	[illegible]											{![9!.[9		[illegible]	[illegible]
Y9Ð.¤[LDI ¤DwL£	[illegible]	.[illegible]D	D/	t[w	a					[illegible]							{![9!.[9		[illegible]	[illegible]
Y9Ð!¤[!/Y	[illegible]	![illegible][Y	D/	t[w	a	[illegible]				[illegible]							{![9!.[9		[illegible]	[illegible]
Y9Ð!¤[!/Y	[illegible]	![illegible][Y	D/	t[w	a			[illegible]	[illegible]		[illegible]						{![9!.[9		[illegible]	[illegible]
Y9Ð.¤[LDI ¤DwL£	[illegible]	.[illegible]D	D/	t[w	a					[illegible]	[illegible]						{![9!.[9		[illegible]	[illegible]

molex

a /E2ぁれわEb。[! 59{9! [95 ! {{9a . [Ða ! ¤{9! [
. ha ! b5 t Lb h- ¤{I 99¤

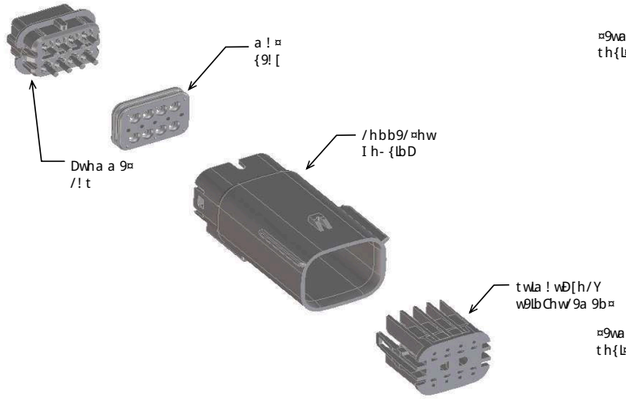

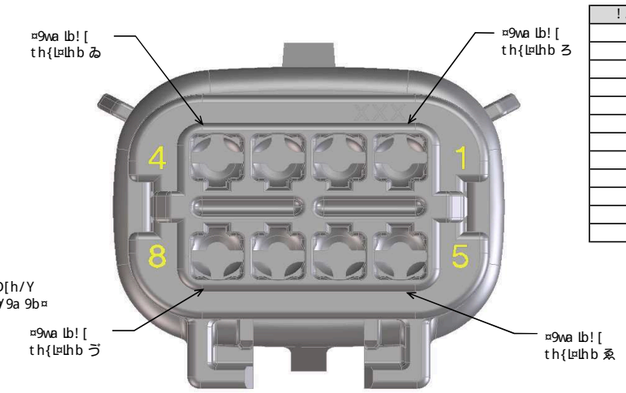

! . . w9' L! ¤lhb	59{/wLt ¤lhb	/h[hw	a ! ¤9wL! [
! □[Y	I h- {lbD¤¥9ÐLbD ht¤lhb !	. [! /Y	{t{ JbÐ[hb DC#f
. [ED	I h- {lbD¤¥9ÐLbD ht¤lhb .	[lDI ¤ DwL Ð	{t{ JbÐ[hb DC#f
/ □ w	I h- {lbD¤¥9ÐLbD ht¤lhb /	. wh° b	{t{ JbÐ[hb DC#f
5 □Dw	I h- {lbD¤¥9ÐLbD ht¤lhb 5	Dw99b	{t{ JbÐ[hb DC#f
/ □5D	I h- {lbD¤¥9ÐLbD ht¤lhb /	5! wY DwL Ð	{t{ JbÐ[hb DC#f
5 [D	I h- {lbD¤¥9ÐLbD ht¤lhb 5	{¤hb9 DwL Ð	{t{ JbÐ[hb DC#f
! ÐP	I h- {lbD¤¥9ÐLbD ht¤lhb !	Ð9[[h°	{t{ JbÐ[hb DC#f
D/t	Dwha a 9¤/! t t[- DD95、	. [! /Y	{t{ JbÐ[hb DC#f
D/h	Dwha a 9¤/! t ht9b、	. [! /Y	{t{ JbÐ[hb DC#f
t[w	t[w	b! ¤- wL [	{t{ JbÐ[hb DC#f
a w	a ! ¤{9! [	w- {¤ w95	lbI 9w9b¤[Ð[- . wL/! ¤95 {l[L/hb9
a □	a ! ¤{9! [	whÐ! [. [- 9	lbI 9w9b¤[Ð[- . wL/! ¤95 {l[L/hb9

Chw! 55L¤lhb! [lbChwa ! ¤lhb {99 {5□わああああ

! {{9a . [Ð59{/wLt ¤lhb	! {{9a . [Ðt! w¤ b- a . 9w	/ha thb9b¤				. [h/Y95 ¤9wa lb! [{										{¤! ¤- {	/ha a 9b¤{	ht¤lhb! [! ¤¤! ¤/I a 9b¤{ {h[5 {9t 9w! ¤9[Ð			
		¤I 9 tw9{9b/9 hC! b ! . . w9' L! ¤lhb Lb5L/! ¤9{ ¤I 9 tw9{9b/9 hC¤I ! ¤/ha thb9b¤☆				/! ' L¤Ð° L¤I ! b- a . 9wlb5L/! ¤9{ . [h/Y95 ¤9wa lb! [th{L¤lhb /! ' L¤Ð° L¤I h- ¤! b- a . 9wlb5L/! ¤9{ ht9b ¤9wa lb! [th{L¤lhb															
		I h- {lbD Y9Ð¥h[hw	Dwha a 9¤ /! t	t[w	a ! ¤{9! [	ろ	わ	わ	ゐ	ゑ	を	ん	づ											
Y9Ð! ¤[! /Y	わああああ	! □[Y	D/h	t[w	a w												t[! bb95 h. {h[9(/9b/9	{99 わああああ	わあ ゑゐおくえ	わあ ゑゐおくろ	わあ ゑるおくを	わあ ゑるおくえ
Y9Ð. ¤[tDI ¤ DwL Ð	わああああ	. [ED	D/h	t[w	a w												t[! bb95 h. {h[9(/9b/9	{99 わああああ	わあ ゑゐおくえ	わあ ゑゐおくろ	わあ ゑるおくを	わあ ゑるおくえ
Y9Ð/ ¤[¤wh° b	わああああ	/ □w	D/h	t[w	a w												t[! bb95 h. {h[9(/9b/9	{99 わああああ	わあ ゑゐおくえ	わあ ゑゐおくろ	わあ ゑるおくを	わあ ゑるおくえ
Y9Ð5 ¤Ðw99b	わああああ	5 □Dw	D/h	t[w	a w												t[! bb95 h. {h[9(/9b/9	{99 わああああ	わあ ゑゐおくえ	わあ ゑゐおくろ	わあ ゑるおくを	わあ ゑるおくえ
' h l5 Y9Ɛ	わああああ																							
Y9Ð! ¤[! /Y	わああああ	! □[Y	D/t	t[w	a w				ゐ								t[! bb95 h. {h[9(/9b/9	{99 わああああ	わあ ゑゐおくえ	わあ ゑゐおくろ	わあ ゑるおくを	わあ ゑるおくえ
Y9Ð. ¤[tDI ¤ DwL Ð	わああああ	. [ED	D/t	t[w	a w				ゐ								t[! bb95 h. {h[9(/9b/9	{99 わああああ	わあ ゑゐおくえ	わあ ゑゐおくろ	わあ ゑるおくを	わあ ゑるおくえ
Y9Ð/ ¤[¤wh° b	わああああ	/ □w	D/t	t[w	a w				ゐ								t[! bb95 h. {h[9(/9b/9	{99 わああああ	わあ ゑゐおくえ	わあ ゑゐおくろ	わあ ゑるおくを	わあ ゑるおくえ
Y9Ð5 ¤Ðw99b	わああああ	5 □Dw	D/t	t[w	a w				ゐ								t[! bb95 h. {h[9(/9b/9	{99 わああああ	わあ ゑゐおくえ	わあ ゑゐおくろ	わあ ゑるおくを	わあ ゑるおくえ
' h l5 Y9Ɛ	わああああ																							
Y9Ð! ¤[! /Y	わああああ	! □[Y	D/t	t[w	a w				ゐ	ゑ							t[! bb95 h. {h[9(/9b/9	{99 わああああ	わあ ゑゐおくえ	わあ ゑゐおくろ	わあ ゑるおくを	わあ ゑるおくえ
Y9Ð. ¤[tDI ¤ DwL Ð	わああああ	. [ED	D/t	t[w	a w				ゐ	ゑ							t[! bb95 h. {h[9(/9b/9	{99 わああああ	わあ ゑゐおくえ	わあ ゑゐおくろ	わあ ゑるおくを	わあ ゑるおくえ
Y9Ð/ ¤[¤wh° b	わああああ	/ □w	D/t	t[w	a w				ゐ	ゑ							t[! bb95 h. {h[9(/9b/9	{99 わああああ	わあ ゑゐおくえ	わあ ゑゐおくろ	わあ ゑるおくを	わあ ゑるおくえ
Y9Ð5 ¤Ðw99b	わああああ	5 □Dw	D/t	t[w	a w				ゐ	ゑ							t[! bb95 h. {h[9(/9b/9	{99 わああああ	わあ ゑゐおくえ	わあ ゑゐおくろ	わあ ゑるおくを	わあ ゑるおくえ
' h l5 Y9Ɛ	わああああ																							
Y9Ð! ¤[! /Y	わああああ	! □[Y	D/t	t[w	a w	ろ			ゐ	ゑ							t[! bb95 h. {h[9(/9b/9	{99 わああああ	わあ ゑゐおくえ	わあ ゑゐおくろ	わあ ゑるおくを	わあ ゑるおくえ
Y9Ð. ¤[tDI ¤ DwL Ð	わああああ	. [ED	D/t	t[w	a w	ろ			ゐ	ゑ							t[! bb95 h. {h[9(/9b/9	{99 わああああ	わあ ゑゐおくえ	わあ ゑゐおくろ	わあ ゑるおくを	わあ ゑるおくえ
Y9Ð/ ¤[¤wh° b	わああああ	/ □w	D/t	t[w	a w	ろ			ゐ	ゑ							t[! bb95 h. {h[9(/9b/9	{99 わああああ	わあ ゑゐおくえ	わあ ゑゐおくろ	わあ ゑるおくを	わあ ゑるおくえ
Y9Ð5 ¤Ðw99b	わああああ	5 □Dw	D/t	t[w	a w	ろ			ゐ	ゑ							t[! bb95 h. {h[9(/9b/9	{99 わああああ	わあ ゑゐおくえ	わあ ゑゐおくろ	わあ ゑるおくを	わあ ゑるおくえ
' h l5 Y9Ɛ	わああああ																							
Y9Ð! ¤[! /Y	わああああ	! □[Y	D/t	t[w	a w	ろ			ゐ	ゑ			づ				t[! bb95 h. {h[9(/9b/9	{99 わああああ	わあ ゑゐおくえ	わあ ゑゐおくろ	わあ ゑるおくを	わあ ゑるおくえ
Y9Ð. ¤[tDI ¤ DwL Ð	わああああ	. [ED	D/t	t[w	a w	ろ			ゐ	ゑ			づ				t[! bb95 h. {h[9(/9b/9	{99 わああああ	わあ ゑゐおくえ	わあ ゑゐおくろ	わあ ゑるおくを	わあ ゑるおくえ
Y9Ð/ ¤[¤wh° b	わああああ	/ □w	D/t	t[w	a w	ろ			ゐ	ゑ			づ				t[! bb95 h. {h[9(/9b/9	{99 わああああ	わあ ゑゐおくえ	わあ ゑゐおくろ	わあ ゑるおくを	わあ ゑるおくえ
Y9Ð5 ¤Ðw99b	わああああ	5 □Dw	D/t	t[w	a w	ろ			ゐ	ゑ			づ				t[! bb95 h. {h[9(/9b/9	{99 わああああ	わあ ゑゐおくえ	わあ ゑゐおくろ	わあ ゑるおくを	わあ ゑるおくえ
' h l5 Y9Ɛ	わああああ																							
Y9Ð! ¤[! /Y	わああああ	! □[Y	D/t	t[w	a w												t[! bb95 h. {h[9(/9b/9	{99 わああああ	わあ ゑゐおくえ	わあ ゑゐおくろ	わあ ゑるおくを	わあ ゑるおくえ
Y9Ð. ¤[tDI ¤ DwL Ð	わああああ	. [ED	D/t	t[w	a w												t[! bb95 h. {h[9(/9b/9	{99 わああああ	わあ ゑゐおくえ	わあ ゑゐおくろ	わあ ゑるおくを	わあ ゑるおくえ
Y9Ð/ ¤[¤wh° b	わああああ	/ □w	D/t	t[w	a w												t[! bb95 h. {h[9(/9b/9	{99 わああああ	わあ ゑゐおくえ	わあ ゑゐおくろ	わあ ゑるおくを	わあ ゑるおくえ
Y9Ð5 ¤Ðw99b	わああああ	5 □Dw	D/t	t[w	a w												t[! bb95 h. {h[9(/9b/9	{99 わああああ	わあ ゑゐおくえ	わあ ゑゐおくろ	わあ ゑるおくを	わあ ゑるおくえ
' h l5 Y9Ɛ	わああああ																							
Y9Ð! ¤[! /Y	わああああ	! □[Y	D/t	t[w	a w												t[! bb95 h. {h[9(/9b/9	{99 わああああ	わあ ゑゐおくえ	わあ ゑゐおくろ	わあ ゑるおくを	わあ ゑるおくえ
Y9Ð. ¤[tDI ¤ DwL Ð	わああああ	. [ED	D/t	t[w	a w												t[! bb95 h. {h[9(/9b/9	{99 わああああ	わあ ゑゐおくえ	わあ ゑゐおくろ	わあ ゑるおくを	わあ ゑるおくえ
Y9Ð! ¤Ð9[[h°	わああああ	! ÐP	D/t	t[w	a w												t[! bb95 h. {h[9(/9b/9	{99 わああああ	わあ ゑゐおくえ	わあ ゑゐおくろ	わあ ゑるおくを	わあ ゑるおくえ
Y9Ð! ¤Ð9[[h°	わああああ	! ÐP	D/h	t[w	a w												t[! bb95 h. {h[9(/9b/9	{99 わああああ	わあ ゑゐおくえ	わあ ゑゐおくろ	わあ ゑるおくを	わあ ゑるおくえ
Y9Ð/ ¤5! wY DwL Ð	わああああ	/ □5D	D/h	t[w	a w												t[! bb95 h. {h[9(/9b/9	{99 わああああ	わあ ゑゐおくえ	わあ ゑゐおくろ	わあ ゑるおくを	わあ ゑるおくえ

! {{9a. [Ð59{/wĿt¤Ŀhb	! {{9a. [Ðt! w¤ b- a. 9w	/ha thb9b¤ ¤I 9tw9{9b/9hC! b! .. w9¹Ŀ! ¤Ŀhb Ŀb5Ŀ/! ¤9{ ¤I 9 tw9{9b/9hC¤I ! ¤/ha thb9b¤				. [h/Y95 ¤9wa Ŀb! [{ /! ¹Ŀ¤Ð° Ŀ¤I ! b- a. 9wĿb5Ŀ/! ¤9{ . [h/Y95 ¤9wa Ŀb! [th{Ŀ¤Ŀhb /! ¹Ŀ¤Ð° Ŀ¤I h- ¤! b- a. 9wĿb5Ŀ/! ¤9{ ht9b ¤9wa Ŀb! [th{Ŀ¤Ŀhb											{¤! ¤- {	/ha a 9b¤{	ht¤Ŀhb! [! ¤¤! ¤/I a 9b¤{ {h[5 {9t9w! ¤9[Ð			
		I h- {ĿbD Y9Ð¥h[hw	Dwha a 9¤ /! t	t[w	a ! ¤{9! [	ろ	ゎ	わ	ゐ	ゑ	を	ん	う						. ! /Y{I 9[[° Ŀ¤I wĿ {	. ! /Y{I 9[[° Ŀ¤I h- ¤ wĿ {	ħ! 5! t¤hw° Ŀ¤I wĿ {	ħ! 5! t¤hw ° Ŀ¤I h- ¤ wĿ {
Y9Ð5¤{¤hb9 DwĿ£	[illegible]	5[ÐD	D/h	t[w	a ⊠												t[! bb95 h. {h[9{/9b/9	{99 [illegible]	[illegible]	[illegible]	[illegible]	[illegible]
Y9Ð! ¤[! /Y	[illegible]	! ⊡[Y	D/t	t[w	a ⊠	ƺ	ɨ	ɨ	ƌ								t[! bb95 h. {h[9{/9b/9	{99 [illegible]	[illegible]	[illegible]	[illegible]	[illegible]
Y9Ð! ¤[! /Y	[illegible]	! ⊡[Y	D/t	t[w	a ⊠	ƺ	ɨ			ʓ	ɀ	ɦ	⁼				t[! bb95 h. {h[9{/9b/9	{99 [illegible]	[illegible]	[illegible]	[illegible]	[illegible]
Y9Ð! ¤[! /Y	[illegible]	! ⊡[Y	D/t	t[w	a ⊠	ƺ	ɨ										t[! bb95 h. {h[9{/9b/9	{99 [illegible]	[illegible]	[illegible]	[illegible]	[illegible]
Y9Ð! ¤[! /Y	[illegible]	! ⊡[Y	D/t	t[w	a ⊠	ƺ	ɨ	ɨ		ʓ							t[! bb95 h. {h[9{/9b/9	{99 [illegible]	[illegible]	[illegible]	[illegible]	[illegible]
Y9Ð! ¤[! /Y	[illegible]	! ⊡[Y	D/t	t[w	a ⊠	ƺ	ɨ	ɨ	ƌ	ʓ			⁼				t[! bb95 h. {h[9{/9b/9	{99 [illegible]	[illegible]	[illegible]	[illegible]	[illegible]
Y9Ð! ¤[! /Y	[illegible]	! ⊡[Y	D/t	t[w	a ⊠	ƺ		ɨ		ʓ	ɀ	ɦ					t[! bb95 h. {h[9{/9b/9	{99 [illegible]	[illegible]	[illegible]	[illegible]	[illegible]
Y9Ð! ¤[! /Y	[illegible]	! ⊡[Y	D/t	t[w	a ⊠	ƺ	ɨ	ɨ	ƌ	ʓ	ɀ						t[! bb95 h. {h[9{/9b/9	{99 [illegible]	[illegible]	[illegible]	[illegible]	[illegible]
Y9Ð! ¤[! /Y	[illegible]	! ⊡[Y	D/t	t[w	a ⊠	ƺ	ɨ	ɨ			ɀ						t[! bb95 h. {h[9{/9b/9	{99 [illegible]	[illegible]	[illegible]	[illegible]	[illegible]
Y9Ð! ¤[! /Y	[illegible]	! ⊡[Y	D/t	t[w	a ⊠	ƺ					ɀ						t[! bb95 h. {h[9{/9b/9	{99 [illegible]	[illegible]	[illegible]	[illegible]	[illegible]
Y9Ð! ¤[! /Y	[illegible]	! ⊡[Y	D/t	t[w	a ⊠	ƺ					ɀ	ɦ	⁼				t[! bb95 h. {h[9{/9b/9	{99 [illegible]	[illegible]	[illegible]	[illegible]	[illegible]
Y9Ð! ¤[! /Y	[illegible]	! ⊡[Y	D/t	t[w	a ⊠			ɨ	ƌ	ʓ	ɀ	ɦ	⁼				t[! bb95 h. {h[9{/9b/9	{99 [illegible]	[illegible]	[illegible]	[illegible]	[illegible]
Y9Ð! ¤[! /Y	[illegible]	! ⊡[Y	D/t	t[w	a ⊠				ƌ			ɦ	⁼				t[! bb95 h. {h[9{/9b/9	{99 [illegible]	[illegible]	[illegible]	[illegible]	[illegible]
Y9Ð! ¤[! /Y	[illegible]	! ⊡[Y	D/t	t[w	a ⊠				ƌ	ʓ	ɀ	ɦ	⁼				t[! bb95 h. {h[9{/9b/9	{99 [illegible]	[illegible]	[illegible]	[illegible]	[illegible]
Y9Ð! ¤[! /Y	[illegible]	! ⊡[Y	D/t	t[w	a ⊠		ɨ	ɨ	ƌ		ɀ	ɦ	⁼				t[! bb95 h. {h[9{/9b/9	{99 [illegible]	[illegible]	[illegible]	[illegible]	[illegible]
Y9Ð! ¤[! /Y	[illegible]	! ⊡[Y	D/t	t[w	a ⊠					ʓ	ɀ	ɦ					t[! bb95 h. {h[9{/9b/9	{99 [illegible]	[illegible]	[illegible]	[illegible]	[illegible]
Y9Ð! ¤[! /Y	[illegible]	! ⊡[Y	D/t	t[w	a ⊠			ɨ	ƌ								t[! bb95 h. {h[9{/9b/9	{99 [illegible]	[illegible]	[illegible]	[illegible]	[illegible]
Y9Ð! ¤[! /Y	[illegible]	! ⊡[Y	D/t	t[w	a ⊠						ɀ	ɦ	⁼				t[! bb95 h. {h[9{/9b/9	{99 [illegible]	[illegible]	[illegible]	[illegible]	[illegible]
Y9Ð. ¤[ÐI ¤DwĿ£	[illegible]	. [ÐD	D/t	t[w	a ⊠							ɦ	⁼				t[! bb95 h. {h[9{/9b/9	{99 [illegible]	[illegible]	[illegible]	[illegible]	[illegible]
Y9Ð! ¤[! /Y	[illegible]	! ⊡[Y	D/t	t[w	a ⊠	ƺ							⁼				t[! bb95 h. {h[9{/9b/9	{99 [illegible]	[illegible]	[illegible]	[illegible]	[illegible]
Y9Ð! ¤[! /Y	[illegible]	! ⊡[Y	D/t	t[w	a ⊠						ɀ		⁼				t[! bb95 h. {h[9{/9b/9	{99 [illegible]	[illegible]	[illegible]	[illegible]	[illegible]
Y9Ð! ¤[! /Y	[illegible]	! ⊡[Y	D/t	t[w	a ⊠		ɨ			ʓ							t[! bb95 h. {h[9{/9b/9	{99 [illegible]	[illegible]	[illegible]	[illegible]	[illegible]
Y9Ð! ¤[! /Y	[illegible]	! ⊡[Y	D/t	t[w	a ⊠					ʓ							t[! bb95 h. {h[9{/9b/9	{99 [illegible]	[illegible]	[illegible]	[illegible]	[illegible]
Y9Ð. ¤[ÐI ¤DwĿ£	[illegible]	. [ÐD	D/t	t[w	a ⊠	ƺ		ɨ					⁼				t[! bb95 h. {h[9{/9b/9	{99 [illegible]	[illegible]	[illegible]	[illegible]	[illegible]
Y9Ð. ¤[ÐI ¤DwĿ£	[illegible]	. [ÐD	D/t	t[w	a ⊠			ɨ					⁼				t[! bb95 h. {h[9{/9b/9	{99 [illegible]	[illegible]	[illegible]	[illegible]	[illegible]
Y9Ð. ¤[ÐI ¤DwĿ£	[illegible]	. [ÐD	D/t	t[w	a ⊠	ƺ											t[! bb95 h. {h[9{/9b/9	{99 [illegible]	[illegible]	[illegible]	[illegible]	[illegible]
Y9Ð! ¤[! /Y	[illegible]	! ⊡[Y	D/t	t[w	a ⊠	ƺ	ɨ	ɨ	ƌ	ʓ		ɦ					t[! bb95 h. {h[9{/9b/9	{99 [illegible]	[illegible]	[illegible]	[illegible]	[illegible]
Y9Ð! ¤[! /Y	[illegible]	! ⊡[Y	D/t	t[w	a ⊠	ƺ											t[! bb95 h. {h[9{/9b/9	{99 [illegible]	[illegible]	[illegible]	[illegible]	[illegible]
Y9Ð! ¤[! /Y	[illegible]	! ⊡[Y	D/t	t[w	a ⊠					ʓ			⁼				t[! bb95 h. {h[9{/9b/9	{99 [illegible]	[illegible]	[illegible]	[illegible]	[illegible]
Y9Ð! ¤[! /Y	[illegible]	! ⊡[Y	D/t	t[w	a ⊠				ƌ		ɀ						t[! bb95 h. {h[9{/9b/9	{99 [illegible]	[illegible]	[illegible]	[illegible]	[illegible]
Y9Ð! ¤[! /Y	[illegible]	! ⊡[Y	D/t	t[w	a ⊠	ƺ						ɦ					t[! bb95 h. {h[9{/9b/9	{99 [illegible]	[illegible]	[illegible]	[illegible]	[illegible]
Y9Ð! ¤[! /Y	[illegible]	! ⊡[Y	D/t	t[w	a ⊠	ƺ	ɨ	ɨ	ƌ			ɦ					t[! bb95 h. {h[9{/9b/9	{99 [illegible]	[illegible]	[illegible]	[illegible]	[illegible]
Y9Ð! ¤[! /Y	[illegible]	! ⊡[Y	D/t	t[w	a ⊠	ƺ	ɨ			ʓ	ɀ		⁼				t[! bb95 h. {h[9{/9b/9	{99 [illegible]	[illegible]	[illegible]	[illegible]	[illegible]
Y9Ð! ¤[! /Y	[illegible]	! ⊡[Y	D/t	t[w	a ⊠		ɨ	ɨ					⁼				t[! bb95 h. {h[9{/9b/9	{99 [illegible]	[illegible]	[illegible]	[illegible]	[illegible]
Y9Ð! ¤[! /Y	[illegible]	! ⊡[Y	D/t	t[w	a ⊠	ƺ		ɨ	ƌ			ɦ	⁼				t[! bb95 h. {h[9{/9b/9	{99 [illegible]	[illegible]	[illegible]	[illegible]	[illegible]
Y9Ð! ¤[! /Y	[illegible]	! ⊡[Y	D/t	t[w	a ⊠				ƌ	ʓ	ɀ						t[! bb95 h. {h[9{/9b/9	{99 [illegible]	[illegible]	[illegible]	[illegible]	[illegible]
Y9Ð! ¤[! /Y	[illegible]	! ⊡[Y	D/t	t[w	a ⊠	ƺ	ɨ		ƌ	ʓ	ɀ		⁼				t[! bb95 h. {h[9{/9b/9	{99 [illegible]	[illegible]	[illegible]	[illegible]	[illegible]
Y9Ð! ¤[! /Y	[illegible]	! ⊡[Y	D/t	t[w	a ⊠		ɨ	ɨ		ʓ			⁼				t[! bb95 h. {h[9{/9b/9	{99 [illegible]	[illegible]	[illegible]	[illegible]	[illegible]
Y9Ð! ¤[! /Y	[illegible]	! ⊡[Y	D/t	t[w	a ⊠	ƺ	ɨ	ɨ	ƌ	ʓ		ɦ	⁼				t[! bb95 h. {h[9{/9b/9	{99 [illegible]	[illegible]	[illegible]	[illegible]	[illegible]
Y9Ð! ¤[! /Y	[illegible]	! ⊡[Y	D/t	t[w	a ⊠			ɨ	ƌ	ʓ		ɦ					t[! bb95 h. {h[9{/9b/9	{99 [illegible]	[illegible]	[illegible]	[illegible]	[illegible]
Y9Ð! ¤[! /Y	[illegible]	! ⊡[Y	D/t	t[w	a ⊠			ɨ				ɦ					t[! bb95 h. {h[9{/9b/9	{99 [illegible]	[illegible]	[illegible]	[illegible]	[illegible]
Y9Ð! ¤[! /Y	[illegible]	! ⊡[Y	D/t	t[w	a ⊠	ƺ	ɨ		ƌ	ʓ		ɦ					t[! bb95 h. {h[9{/9b/9	{99 [illegible]	[illegible]	[illegible]	[illegible]	[illegible]
Y9Ð! ¤[! /Y	[illegible]	! ⊡[Y	D/t	t[w	a ⊠				ƌ	ʓ		ɦ					t[! bb95 h. {h[9{/9b/9	{99 [illegible]	[illegible]	[illegible]	[illegible]	[illegible]
Y9Ð! ¤[! /Y	[illegible]	! ⊡[Y	D/t	t[w	a ⊠		ɨ										t[! bb95 h. {h[9{/9b/9	{99 [illegible]	[illegible]	[illegible]	[illegible]	[illegible]
Y9Ð! ¤[! /Y	[illegible]	! ⊡[Y	D/t	t[w	a ⊠	ƺ		ɨ	ƌ	ʓ	ɀ	ɦ	⁼				t[! bb95 h. {h[9{/9b/9	{99 [illegible]	[illegible]	[illegible]	[illegible]	[illegible]
Y9Ð! ¤[! /Y	[illegible]	! ⊡[Y	D/h	t[w	a ⊡												{! [9! . [9		[illegible]	[illegible]	[illegible]	[illegible]
Y9Ð. ¤[ÐI ¤DwĿ£	[illegible]	. [ÐD	D/h	t[w	a ⊡												{! [9! . [9		[illegible]	[illegible]	[illegible]	[illegible]
Y9Ð/¤wh° b	[illegible]	/⊡w	D/h	t[w	a ⊡												bh¤w9/ha a 9b595	{99 [illegible]	[illegible]	[illegible]	[illegible]	[illegible]
Y9Ð5¤Ðw99b	[illegible]	5Ðw	D/h	t[w	a ⊡												bh¤w9/ha a 9b595	{99 [illegible]	[illegible]	[illegible]	[illegible]	[illegible]
¹hl5 Y9£	[illegible]	X	X	X	X	X	X	X	X	X	X	X	X				X	X	X	X	X	X
Y9Ð! ¤[! /Y	[illegible]	! ⊡[Y	D/t	t[w	a ⊡				ƌ								{! [9! . [9		[illegible]	[illegible]	[illegible]	[illegible]
Y9Ð. ¤[ÐI ¤DwĿ£	[illegible]	. [ÐD	D/t	t[w	a ⊡				ƌ								{! [9! . [9		[illegible]	[illegible]	[illegible]	[illegible]
Y9Ð/¤wh° b	[illegible]	/⊡w	D/t	t[w	a ⊡				ƌ								bh¤w9/ha a 9b595		[illegible]	[illegible]	[illegible]	[illegible]
Y9Ð5¤Ðw99b	[illegible]	5Ðw	D/t	t[w	a ⊡				ƌ								bh¤w9/ha a 9b595		[illegible]	[illegible]	[illegible]	[illegible]
¹hl5 Y9£	[illegible]	X	X	X	X	X	X	X	X	X	X	X	X				X	X	X	X	X	X
Y9Ð! ¤[! /Y	[illegible]	! ⊡[Y	D/t	t[w	a ⊡				ƌ	ʓ							{! [9! . [9		[illegible]	[illegible]	[illegible]	[illegible]
Y9Ð. ¤[ÐI ¤DwĿ£	[illegible]	. [ÐD	D/t	t[w	a ⊡				ƌ	ʓ							{! [9! . [9		[illegible]	[illegible]	[illegible]	[illegible]
Y9Ð/¤wh° b	[illegible]	/⊡w	D/t	t[w	a ⊡				ƌ	ʓ							bh¤w9/ha a 9b595		[illegible]	[illegible]	[illegible]	[illegible]
Y9Ð5¤Ðw99b	[illegible]	5Ðw	D/t	t[w	a ⊡				ƌ	ʓ							bh¤w9/ha a 9b595		[illegible]	[illegible]	[illegible]	[illegible]
¹hl5 Y9£	[illegible]	X	X	X	X	X	X	X	X	X	X	X	X				X	X	X	X	X	X
Y9Ð! ¤[! /Y	[illegible]	! ⊡[Y	D/t	t[w	a ⊡	ƺ			ƌ	ʓ							{! [9! . [9		[illegible]	[illegible]	[illegible]	[illegible]
Y9Ð. ¤[ÐI ¤DwĿ£	[illegible]	. [ÐD	D/t	t[w	a ⊡	ƺ			ƌ	ʓ							{! [9! . [9		[illegible]	[illegible]	[illegible]	[illegible]
Y9Ð/¤wh° b	[illegible]	/⊡w	D/t	t[w	a ⊡	ƺ			ƌ	ʓ							bh¤w9/ha a 9b595		[illegible]	[illegible]	[illegible]	[illegible]
Y9Ð5¤Ðw99b	[illegible]	5Ðw	D/t	t[w	a ⊡	ƺ			ƌ	ʓ							bh¤w9/ha a 9b595		[illegible]	[illegible]	[illegible]	[illegible]
¹hl5 Y9£	[illegible]	X	X	X	X	X	X	X	X	X	X	X	X				X	X	X	X	X	X
Y9Ð! ¤[! /Y	[illegible]	! ⊡[Y	D/t	t[w	a ⊡	ƺ			ƌ	ʓ			⁼				{! [9! . [9		[illegible]	[illegible]	[illegible]	[illegible]
Y9Ð. ¤[ÐI ¤DwĿ£	[illegible]	. [ÐD	D/t	t[w	a ⊡	ƺ			ƌ	ʓ			⁼				{! [9! . [9		[illegible]	[illegible]	[illegible]	[illegible]
Y9Ð/¤wh° b	[illegible]	/⊡w	D/t	t[w	a ⊡	ƺ			ƌ	ʓ			⁼				bh¤w9/ha a 9b595		[illegible]	[illegible]	[illegible]	[illegible]
Y9Ð5¤Ðw99b	[illegible]	5Ðw	D/t	t[w	a ⊡	ƺ			ƌ	ʓ			⁼				bh¤w9/ha a 9b595		[illegible]	[illegible]	[illegible]	[illegible]
¹hl5 Y9£	[illegible]	X	X	X	X	X	X	X	X	X	X	X	X				X	X	X	X	X	X
Y9Ð! ¤[! /Y	[illegible]	! ⊡[Y	D/t	t[w	a ⊡	ƺ	ɨ	ɨ			ɀ	ɦ	⁼				{! [9! . [9		[illegible]	[illegible]	[illegible]	[illegible]
Y9Ð! ¤[! /Y	[illegible]	! ⊡[Y	D/t	t[w	a ⊡								⁼				{! [9! . [9		[illegible]	[illegible]	[illegible]	[illegible]
Y9Ð! ¤[! /Y	[illegible]	! ⊡[Y	D/t	t[w	a ⊡			ɨ		ʓ							{! [9! . [9		[illegible]	[illegible]	[illegible]	[illegible]
Y9Ð! ¤[! /Y	[illegible]	! ⊡[Y	D/t	t[w	a ⊡		ɨ	ɨ	ƌ	ʓ	ɀ	ɦ					{! [9! . [9		[illegible]	[illegible]	[illegible]	[illegible]
Y9Ð! ¤[! /Y	[illegible]	! ⊡[Y	D/t	t[w	a ⊡						ɀ						{! [9! . [9		[illegible]	[illegible]	[illegible]	[illegible]
Y9Ð! ¤[! /Y	[illegible]	! ⊡[Y	D/t	t[w	a ⊡			ɨ		ʓ	ɀ						{! [9! . [9		[illegible]	[illegible]	[illegible]	[illegible]
Y9Ð! ¤[! /Y	[illegible]	! ⊡[Y	D/t	t[w	a ⊡					ʓ	ɀ		⁼				{! [9! . [9		[illegible]	[illegible]	[illegible]	[illegible]
Y9Ð! ¤[! /Y	[illegible]	! ⊡[Y	D/t	t[w	a ⊡	ƺ		ɨ		ʓ							{! [9! . [9		[illegible]	[illegible]	[illegible]	[illegible]
Y9Ð! ¤[! /Y	[illegible]	! ⊡[Y	D/t	t[w	a ⊡	ƺ	ɨ	ɨ	ƌ	ʓ	ɀ	ɦ	⁼				{! [9! . [9		[illegible]	[illegible]	[illegible]	[illegible]

! {{9a . [Ð59{/wĿt ¤Ŀhb	! {{9a . [Ðt! w¤ b- a . 9w	/ha thb9b¤ ¤I 9twÐ{9b/9hC! b! . . wÐ¹ Ŀ! ¤Ŀhb Ŀb5Ŀ/! ¤9{ ¤I 9 twÐ{9b/9hC¤I ! ¤/ha thb9b¤				. [h/Y95 ¤9wa Ŀb! [{ /! ¹ Ŀ¤Ð° Ŀ¤I ! b- a . 9wĿb5Ŀ/! ¤9{ . [h/Y95 ¤9wa Ŀb! [th{Ŀ¤Ŀhb /! ¹ Ŀ¤Ð° Ŀ¤I h- ¤! b- a . 9wĿb5Ŀ/! ¤9{ ht9b ¤9wa Ŀb! [th{Ŀ¤Ŀhb											{¤! ¤-{	/ha a 9b¤{	ht¤Ŀhb! [! ¤¤! ¤/I a 9b¤{ {h[5 {9t9W ¤9[Ð			
		I h-{ŀbD Y9Ð℁h[hw	Dwha a 9¤ /! t	t[w	a ! ¤{9! [	ろ	ゎ	わ	ゐ	ゑ	を	ん	ゔ						. ! /Y{I 9[[° Ŀ¤I wĿ {	. ! /Y{I 9[[° Ŀ¤I h- ¤ wĿ {	[illegible]! 5! t¤hw° Ŀ¤I wĿ {	[illegible]! 5! t¤hw ° Ŀ¤I h- ¤wĿ {
Y9Ð! ☞[! /Y	[illegible]	! ⊡[Y	D/t	t[w	a ⊡							ｸ	ﾆ				{! [9! . [9		[illegible]	[illegible]	[illegible]	[illegible]
Y9Ð! ☞[! /Y	[illegible]	! ⊡[Y	D/t	t[w	a ⊡		ｨ	ｵ			ｾ	ｸ	ﾆ				{! [9! . [9		[illegible]	[illegible]	[illegible]	[illegible]
Y9Ð! ☞[! /Y	[illegible]	! ⊡[Y	D/t	t[w	a ⊡	ミ			ｱ								{! [9! . [9		[illegible]	[illegible]	[illegible]	[illegible]
Y9Ð! ☞[! /Y	[illegible]	! ⊡[Y	D/t	t[w	a ⊡		ｨ	ｵ		ﾇ	ｾ	ｸ	ﾆ				{! [9! . [9		[illegible]	[illegible]	[illegible]	[illegible]
Y9Ð. ☞[ÐI ¤DwĿ Ɛ	[illegible]	. [ÐD	D/t	t[w	a ⊡								ﾆ				{! [9! . [9		[illegible]	[illegible]	[illegible]	[illegible]
Y9Ð! ☞[! /Y	[illegible]	! ⊡[Y	D/t	t[w	a ⊡		ｨ	ｵ		ﾇ	ｾ		ﾆ				{! [9! . [9		[illegible]	[illegible]	[illegible]	[illegible]
Y9Ð! ☞[! /Y	[illegible]	! ⊡[Y	D/t	t[w	a ⊡						ｾ	ｸ					{! [9! . [9		[illegible]	[illegible]	[illegible]	[illegible]
Y9Ð! ☞[! /Y	[illegible]	! ⊡[Y	D/t	t[w	a ⊡							ｸ					{! [9! . [9		[illegible]	[illegible]	[illegible]	[illegible]
Y9Ð! ☞[! /Y	[illegible]	! ⊡[Y	D/t	t[w	a ⊡				ｱ			ｸ					{! [9! . [9		[illegible]	[illegible]	[illegible]	[illegible]
Y9Ð! ☞[! /Y	[illegible]	! ⊡[Y	D/t	t[w	a ⊡			ｵ			ｾ						{! [9! . [9		[illegible]	[illegible]	[illegible]	[illegible]
Y9Ð! ☞[! /Y	[illegible]	! ⊡[Y	D/t	t[w	a ⊡		ｨ	ｵ	ｱ	ﾇ	ｾ						{! [9! . [9		[illegible]	[illegible]	[illegible]	[illegible]
Y9Ð! ☞[! /Y	[illegible]	! ⊡[Y	D/t	t[w	a ⊡				ｱ	ﾇ		ｸ	ﾆ				{! [9! . [9		[illegible]	[illegible]	[illegible]	[illegible]
Y9Ð. ☞[ÐI ¤DwĿ Ɛ	[illegible]	. [ÐD	D/t	t[w	a ⊡	ミ	ｨ	ｵ	ｱ	ﾇ	ｾ	ｸ	ﾆ				{! [9! . [9		[illegible]	[illegible]	[illegible]	[illegible]
Y9Ð! ☞[! /Y	[illegible]	! ⊡[Y	D/t	t[w	a ⊡	ミ				ﾇ							{! [9! . [9		[illegible]	[illegible]	[illegible]	[illegible]
Y9Ð. ☞[ÐI ¤DwĿ Ɛ	[illegible]	. [ÐD	D/t	t[w	a ⊡	ミ					ｾ						{! [9! . [9		[illegible]	[illegible]	[illegible]	[illegible]
Y9Ð! ☞Ð9[[h°	[illegible]	! ⅅ°	D/t	t[w	a ⊡	ミ			ｱ								{! [9! . [9		[illegible]	[illegible]	[illegible]	[illegible]
Y9Ð! ☞Ð9[[h°	[illegible]	! ⅅ°	D/h	t[w	a ⊡												{! [9! . [9		[illegible]	[illegible]	[illegible]	[illegible]
Y9Ð/ ☞5! wY DwĿ Ɛ	[illegible]	/ ⊡5D	D/h	t[w	a ⊡												{! [9! . [9		[illegible]	[illegible]	[illegible]	[illegible]
Y9Ð5 ☞{¤hb9 DwĿ Ɛ	[illegible]	5 ⊡ÐD	D/h	t[w	a ⊡												{! [9! . [9		[illegible]	[illegible]	[illegible]	[illegible]
Y9Ð! ☞[! /Y	[illegible]	! ⊡[Y	D/t	t[w	a ⊡	ミ	ｨ	ｵ	ｱ								{! [9! . [9		[illegible]	[illegible]	[illegible]	[illegible]
Y9Ð! ☞[! /Y	[illegible]	! ⊡[Y	D/t	t[w	a ⊡	ミ	ｨ			ﾇ	ｾ	ｸ	ﾆ				{! [9! . [9		[illegible]	[illegible]	[illegible]	[illegible]
Y9Ð! ☞[! /Y	[illegible]	! ⊡[Y	D/t	t[w	a ⊡	ミ	ｨ										{! [9! . [9		[illegible]	[illegible]	[illegible]	[illegible]
Y9Ð! ☞[! /Y	[illegible]	! ⊡[Y	D/t	t[w	a ⊡	ミ	ｨ	ｵ		ﾇ							{! [9! . [9		[illegible]	[illegible]	[illegible]	[illegible]
Y9Ð! ☞[! /Y	[illegible]	! ⊡[Y	D/t	t[w	a ⊡	ミ	ｨ	ｵ	ｱ	ﾇ			ﾆ				{! [9! . [9		[illegible]	[illegible]	[illegible]	[illegible]
Y9Ð! ☞[! /Y	[illegible]	! ⊡[Y	D/t	t[w	a ⊡	ミ		ｵ		ﾇ	ｾ	ｸ					{! [9! . [9		[illegible]	[illegible]	[illegible]	[illegible]
Y9Ð! ☞[! /Y	[illegible]	! ⊡[Y	D/t	t[w	a ⊡	ミ	ｨ	ｵ	ｱ	ﾇ	ｾ						{! [9! . [9		[illegible]	[illegible]	[illegible]	[illegible]
Y9Ð! ☞[! /Y	[illegible]	! ⊡[Y	D/t	t[w	a ⊡	ミ	ｨ	ｵ			ｾ						{! [9! . [9		[illegible]	[illegible]	[illegible]	[illegible]
Y9Ð! ☞[! /Y	[illegible]	! ⊡[Y	D/t	t[w	a ⊡	ミ					ｾ						{! [9! . [9		[illegible]	[illegible]	[illegible]	[illegible]
Y9Ð! ☞[! /Y	[illegible]	! ⊡[Y	D/t	t[w	a ⊡	ミ					ｾ	ｸ	ﾆ				{! [9! . [9		[illegible]	[illegible]	[illegible]	[illegible]
Y9Ð! ☞[! /Y	[illegible]	! ⊡[Y	D/t	t[w	a ⊡			ｵ	ｱ	ﾇ	ｾ	ｸ	ﾆ				{! [9! . [9		[illegible]	[illegible]	[illegible]	[illegible]
Y9Ð! ☞[! /Y	[illegible]	! ⊡[Y	D/t	t[w	a ⊡				ｱ			ｸ	ﾆ				{! [9! . [9		[illegible]	[illegible]	[illegible]	[illegible]
Y9Ð! ☞[! /Y	[illegible]	! ⊡[Y	D/t	t[w	a ⊡				ｱ	ﾇ	ｾ	ｸ	ﾆ				{! [9! . [9		[illegible]	[illegible]	[illegible]	[illegible]
Y9Ð! ☞[! /Y	[illegible]	! ⊡[Y	D/t	t[w	a ⊡		ｨ	ｵ	ｱ		ｾ	ｸ	ﾆ				{! [9! . [9		[illegible]	[illegible]	[illegible]	[illegible]
Y9Ð! ☞[! /Y	[illegible]	! ⊡[Y	D/t	t[w	a ⊡					ﾇ	ｾ	ｸ					{! [9! . [9		[illegible]	[illegible]	[illegible]	[illegible]
Y9Ð! ☞[! /Y	[illegible]	! ⊡[Y	D/t	t[w	a ⊡			ｵ	ｱ								{! [9! . [9		[illegible]	[illegible]	[illegible]	[illegible]
Y9Ð! ☞[! /Y	[illegible]	! ⊡[Y	D/t	t[w	a ⊡						ｾ	ｸ	ﾆ				{! [9! . [9		[illegible]	[illegible]	[illegible]	[illegible]
Y9Ð. ☞[ÐI ¤DwĿ Ɛ	[illegible]	. [ÐD	D/t	t[w	a ⊡							ｸ	ﾆ				{! [9! . [9		[illegible]	[illegible]	[illegible]	[illegible]
Y9Ð! ☞[! /Y	[illegible]	! ⊡[Y	D/t	t[w	a ⊡	ミ							ﾆ				{! [9! . [9		[illegible]	[illegible]	[illegible]	[illegible]
Y9Ð! ☞[! /Y	[illegible]	! ⊡[Y	D/t	t[w	a ⊡						ｾ		ﾆ				{! [9! . [9		[illegible]	[illegible]	[illegible]	[illegible]
Y9Ð! ☞[! /Y	[illegible]	! ⊡[Y	D/t	t[w	a ⊡		ｨ			ﾇ							{! [9! . [9		[illegible]	[illegible]	[illegible]	[illegible]
Y9Ð! ☞[! /Y	[illegible]	! ⊡[Y	D/t	t[w	a ⊡					ﾇ							{! [9! . [9		[illegible]	[illegible]	[illegible]	[illegible]
Y9Ð. ☞[ÐI ¤DwĿ Ɛ	[illegible]	. [ÐD	D/t	t[w	a ⊡	ミ		ｵ					ﾆ				{! [9! . [9		[illegible]	[illegible]	[illegible]	[illegible]
Y9Ð. ☞[ÐI ¤DwĿ Ɛ	[illegible]	. [ÐD	D/t	t[w	a ⊡			ｵ					ﾆ				{! [9! . [9		[illegible]	[illegible]	[illegible]	[illegible]
Y9Ð. ☞[ÐI ¤DwĿ Ɛ	[illegible]	. [ÐD	D/t	t[w	a ⊡	ミ											{! [9! . [9		[illegible]	[illegible]	[illegible]	[illegible]
Y9Ð! ☞[! /Y	[illegible]	! ⊡[Y	D/t	t[w	a ⊡	ミ	ｨ	ｵ	ｱ	ﾇ		ｸ					{! [9! . [9		[illegible]	[illegible]	[illegible]	[illegible]
Y9Ð! ☞[! /Y	[illegible]	! ⊡[Y	D/t	t[w	a ⊡	ミ											{! [9! . [9		[illegible]	[illegible]	[illegible]	[illegible]
Y9Ð! ☞[! /Y	[illegible]	! ⊡[Y	D/t	t[w	a ⊡					ﾇ			ﾆ				{! [9! . [9		[illegible]	[illegible]	[illegible]	[illegible]
Y9Ð! ☞[! /Y	[illegible]	! ⊡[Y	D/t	t[w	a ⊡				ｱ		ｾ						{! [9! . [9		[illegible]	[illegible]	[illegible]	[illegible]
Y9Ð! ☞[! /Y	[illegible]	! ⊡[Y	D/t	t[w	a ⊡	ミ						ｸ					{! [9! . [9		[illegible]	[illegible]	[illegible]	[illegible]
Y9Ð! ☞[! /Y	[illegible]	! ⊡[Y	D/t	t[w	a ⊡	ミ	ｨ	ｵ	ｱ			ｸ					{! [9! . [9		[illegible]	[illegible]	[illegible]	[illegible]
Y9Ð! ☞[! /Y	[illegible]	! ⊡[Y	D/t	t[w	a ⊡	ミ	ｨ			ﾇ	ｾ		ﾆ				{! [9! . [9		[illegible]	[illegible]	[illegible]	[illegible]
Y9Ð! ☞[! /Y	[illegible]	! ⊡[Y	D/t	t[w	a ⊡		ｨ	ｵ					ﾆ				{! [9! . [9		[illegible]	[illegible]	[illegible]	[illegible]
Y9Ð! ☞[! /Y	[illegible]	! ⊡[Y	D/t	t[w	a ⊡	ミ		ｵ	ｱ			ｸ	ﾆ				{! [9! . [9		[illegible]	[illegible]	[illegible]	[illegible]
Y9Ð! ☞[! /Y	[illegible]	! ⊡[Y	D/t	t[w	a ⊡				ｱ	ﾇ	ｾ						{! [9! . [9		[illegible]	[illegible]	[illegible]	[illegible]
Y9Ð! ☞[! /Y	[illegible]	! ⊡[Y	D/t	t[w	a ⊡	ミ	ｨ		ｱ	ﾇ	ｾ		ﾆ				{! [9! . [9		[illegible]	[illegible]	[illegible]	[illegible]
Y9Ð! ☞[! /Y	[illegible]	! ⊡[Y	D/t	t[w	a ⊡				ｱ				ﾆ				{! [9! . [9		[illegible]	[illegible]	[illegible]	[illegible]
Y9Ð! ☞[! /Y	[illegible]	! ⊡[Y	D/t	t[w	a ⊡				ｱ	ﾇ			ﾆ				{! [9! . [9		[illegible]	[illegible]	[illegible]	[illegible]
Y9Ð! ☞[! /Y	[illegible]	! ⊡[Y	D/t	t[w	a ⊡		ｨ	ｵ		ﾇ			ﾆ				{! [9! . [9		[illegible]	[illegible]	[illegible]	[illegible]
Y9Ð! ☞[! /Y	[illegible]	! ⊡[Y	D/t	t[w	a ⊡	ミ	ｨ	ｵ	ｱ	ﾇ		ｸ	ﾆ				{! [9! . [9		[illegible]	[illegible]	[illegible]	[illegible]
Y9Ð! ☞[! /Y	[illegible]	! ⊡[Y	D/t	t[w	a ⊡			ｵ	ｱ	ﾇ		ｸ					{! [9! . [9		[illegible]	[illegible]	[illegible]	[illegible]
Y9Ð! ☞[! /Y	[illegible]	! ⊡[Y	D/t	t[w	a ⊡			ｵ				ｸ					{! [9! . [9		[illegible]	[illegible]	[illegible]	[illegible]
Y9Ð! ☞[! /Y	[illegible]	! ⊡[Y	D/t	t[w	a ⊡	ミ	ｨ		ｱ	ﾇ		ｸ					{! [9! . [9		[illegible]	[illegible]	[illegible]	[illegible]
Y9Ð! ☞[! /Y	[illegible]	! ⊡[Y	D/t	t[w	a ⊡				ｱ	ﾇ		ｸ					{! [9! . [9		[illegible]	[illegible]	[illegible]	[illegible]
Y9Ð! ☞[! /Y	[illegible]	! ⊡[Y	D/t	t[w	a ⊡		ｨ										{! [9! . [9		[illegible]	[illegible]	[illegible]	[illegible]
Y9Ð! ☞[! /Y	[illegible]	! ⊡[Y	D/t	t[w	a ⊡	ミ		ｵ	ｱ	ﾇ	ｾ	ｸ	ﾆ				{! [9! . [9		[illegible]	[illegible]	[illegible]	[illegible]
Y9Ð! ☞[! /Y	[illegible]	! ⊡[Y	D/t	t[w	a ⊡					ﾇ	ｾ	ｸ	ﾆ				{! [9! . [9		[illegible]	[illegible]	[illegible]	[illegible]
Y9Ð! ☞[! /Y	[illegible]	! ⊡[Y	D/t	t[w	a ⊡			ｵ									{! [9! . [9		[illegible]	[illegible]	[illegible]	[illegible]
Y9Ð/ ☞5! wY DwĿ Ɛ	[illegible]	/ ⊡5D	D/t	t[w	a ⊡				ｱ								{! [9! . [9		[illegible]	[illegible]	[illegible]	[illegible]

molex

a AE2ぬれぬEを: [! 59{9! [95 ! {{Ða ! ¤{9! [
. ha ! b5 tЉ h- ¤{I 99¤

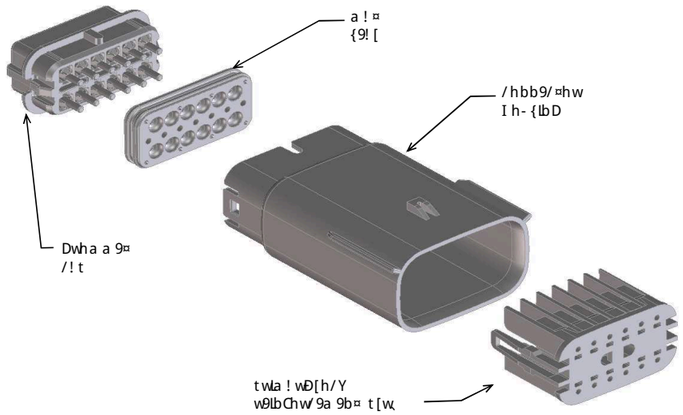

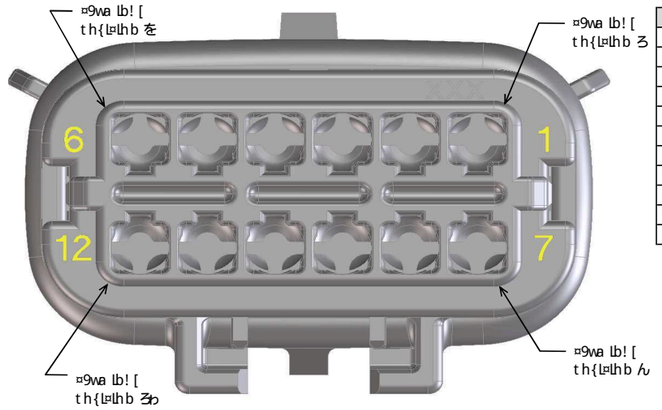

! . . w9' ll ¤lhb	59{/wlt ¤lhb	/h[hw	a ! ¤9wl! [
! ⊡[Y	I h- {lbD¤¥9ÐlbD ht ¤lhb !	. [! / Y	{t{ .lbÐ[hb DC#ず
. [ÐD	I h- {lbD¤¥9ÐlbD ht ¤lhb .	[lDI ¤ Dwl Ð	{t{ .lbÐ[hb DC#ず
/ ⊡w	I h- {lbD¤¥9ÐlbD ht ¤lhb /	. wh° b	{t{ .lbÐ[hb DC#ず
5 □Dw	I h- {lbD¤¥9ÐlbD ht ¤lhb 5	Dw99b	{t{ .lbÐ[hb DC#ず
! ÐÐ[	I h- {lbD¤¥9ÐlbD ht ¤lhb !	Ð9[[h°	{t{ .lbÐ[hb DC#ず
/ □5D	I h- {lbD¤¥9ÐlbD ht ¤lhb /	5! wY Dwl Ð	{t{ .lbÐ[hb DC#ず
5 [ÐD	I h- {lbD¤¥9ÐlbD ht ¤lhb 5	{¤hb9 Dwl Ð	{t{ .lbÐ[hb DC#ず
D/t	Dwha a 9¤ /! t t[- DD95、	. [! / Y	{t{ .lbÐ[hb DC#ず
t[w	t[w	b! ¤- wl [	{t{ .lbÐ[hb DC#ず
a w	a ! ¤{9! [	w- {¤w95	lbI 9w9b¤[Ð[- . wl/ ! ¤95 {l[l/hb9
a ⊡	a ! ¤{9! [	whÐ! [. [- 9	lbI 9w9b¤[Ð[- . wl/ ! ¤95 {l[l/hb9

Chw! 55l¤lhb! [lbChwa ! ¤lhb {99 {5□ぬえぶおれて

! {{9a . [Ð59{/wlt ¤lhb	! {{9a . [Ðt! w¤ b- a . 9w	/ha thb9b¤				. [h/Y95 ¤9wa lb! [{										{¤! ¤- {	/ha a 9b¤{	ht ¤lhb! [! ¤¤! ¤/I a 9b¤{ {h[5 {9t 9wl ¤9[Ð	
		¤I 9 tw9{9b/9 hC! b ! . . w9' ll ¤lhb lb5l/! ¤9{ ¤I 9 tw9{9b/9 hC¤I ! ¤/ha thb9b¤☆				/! ' l¤Ð° l¤I ! b- a . 9wlb5l/! ¤9{ . [h/Y95 ¤9wa lb! [th{l¤lhb /! ' l¤Ð° l¤I h- ¤! b- a . 9wlb5l/! ¤9{ ht 9b ¤9wa lb! [th{l¤lhb												
		I h- {lbD Y9Ð.lh[hw	Dwha a 9¤ /! t	t[w	a ! ¤{9! [	ろ	わ	わ	ゐ	ゑ	を	ん	う	゛	ろれ	ろろ	ろわ				
Y9Ð! ¤[! / Y	ねあぶうおろれて	! ⊡[Y	D/t	t[w	a w													t[! bb95 h. {h[9{/9b/9	{99 ねあぶうおろれて	ねあ.ろれろおろ	ねあ.ろれろおれ
Y9Ð. ¤fLDI ¤ Dwl Ð	ねあぶうおろれと	. [ÐD	D/t	t[w	a w													t[! bb95 h. {h[9{/9b/9	{99 ねあぶうおろれと	ねあ.ろれろおろ	ねあ.ろれろおれ
Y9Ð/ ¤[wh° b	ねあぶうおろれて	/ ⊡w	D/t	t[w	a w													t[! bb95 h. {h[9{/9b/9	{99 ねあぶうおろれて	ねあ.ろれろおろ	ねあ.ろれろおれ
Y9Ð5¤Dw99b	ねあぶうおろれな	5 □Dw	D/t	t[w	a w													t[! bb95 h. {h[9{/9b/9	{99 ねあぶうおろれな	ねあ.ろれろおろ	ねあ.ろれろおれ
' hl5 Y9E	ねあぶうおろれに																				
Y9Ð! ¤[! / Y	ねあぶうおろれぬ	! ⊡[Y	D/t	t[w	a w						を							t[! bb95 h. {h[9{/9b/9	{99 ねあぶうおろれぬ	ねあ.ろれろおろ	ねあ.ろれろおれ
Y9Ð. ¤fLDI ¤ Dwl Ð	ねあぶうおろれね	. [ÐD	D/t	t[w	a w						を							t[! bb95 h. {h[9{/9b/9	{99 ねあぶうおろれね	ねあ.ろれろおろ	ねあ.ろれろおれ
Y9Ð/ ¤[wh° b	ねあぶうおろれの	/ ⊡w	D/t	t[w	a w						を							t[! bb95 h. {h[9{/9b/9	{99 ねあぶうおろれの	ねあ.ろれろおろ	ねあ.ろれろおれ
Y9Ð5¤Dw99b	ねあぶうおろれは	5 □Dw	D/t	t[w	a w						を							t[! bb95 h. {h[9{/9b/9	{99 ねあぶうおろれは	ねあ.ろれろおろ	ねあ.ろれろおれ
' hl5 Y9E	ねあぶうおろれば																				
Y9Ð! ¤[! / Y	ねあぶうおろれひ	! ⊡[Y	D/t	t[w	a w						を	ん						t[! bb95 h. {h[9{/9b/9	{99 ねあぶうおろれひ	ねあ.ろれろおろ	ねあ.ろれろおれ
Y9Ð. ¤fLDI ¤ Dwl Ð	ねあぶうおろれふ	. [ÐD	D/t	t[w	a w						を	ん						t[! bb95 h. {h[9{/9b/9	{99 ねあぶうおろれふ	ねあ.ろれろおろ	ねあ.ろれろおれ
Y9Ð/ ¤[wh° b	ねあぶうおろれへ	/ ⊡w	D/t	t[w	a w						を	ん						t[! bb95 h. {h[9{/9b/9	{99 ねあぶうおろれへ	ねあ.ろれろおろ	ねあ.ろれろおれ
Y9Ð5¤Dw99b	ねあぶうおろれほ	5 □Dw	D/t	t[w	a w						を	ん						t[! bb95 h. {h[9{/9b/9	{99 ねあぶうおろれほ	ねあ.ろれろおろ	ねあ.ろれろおれ
' hl5 Y9E	ねあぶうおろれま																				
Y9Ð! ¤[! / Y	ねあぶうおろれみ	! ⊡[Y	D/t	t[w	a w	ぇ					を	ん						t[! bb95 h. {h[9{/9b/9	{99 ねあぶうおろれみ	ねあ.ろれろおろ	ねあ.ろれろおれ
Y9Ð. ¤fLDI ¤ Dwl Ð	ねあぶうおろれむ	. [ÐD	D/t	t[w	a w	ぇ					を	ん						t[! bb95 h. {h[9{/9b/9	{99 ねあぶうおろれむ	ねあ.ろれろおろ	ねあ.ろれろおれ
Y9Ð/ ¤[wh° b	ねあぶうおろれめ	/ ⊡w	D/t	t[w	a w	ぇ					を	ん						t[! bb95 h. {h[9{/9b/9	{99 ねあぶうおろれめ	ねあ.ろれろおろ	ねあ.ろれろおれ
Y9Ð5¤Dw99b	ねあぶうおろれも	5 □Dw	D/t	t[w	a w	ぇ					を	ん						t[! bb95 h. {h[9{/9b/9	{99 ねあぶうおろれも	ねあ.ろれろおろ	ねあ.ろれろおれ
' hl5 Y9E	ねあぶうおろれや																				
Y9Ð! ¤[! / Y	ねあぶうおろれゆ	! ⊡[Y	D/t	t[w	a w	ぇ					を	ん					ろ	t[! bb95 h. {h[9{/9b/9	{99 ねあぶうおろれゆ	ねあ.ろれろおろ	ねあ.ろれろおれ
Y9Ð. ¤fLDI ¤ Dwl Ð	ねあぶうおろれよ	. [ÐD	D/t	t[w	a w	ぇ					を	ん					ろ	t[! bb95 h. {h[9{/9b/9	{99 ねあぶうおろれよ	ねあ.ろれろおろ	ねあ.ろれろおれ
Y9Ð/ ¤[wh° b	ねあぶうおろれら	/ ⊡w	D/t	t[w	a w	ぇ					を	ん					ろ	t[! bb95 h. {h[9{/9b/9	{99 ねあぶうおろれら	ねあ.ろれろおろ	ねあ.ろれろおれ
Y9Ð5¤Dw99b	ねあぶうおろれり	5 □Dw	D/t	t[w	a w	ぇ					を	ん					ろ	t[! bb95 h. {h[9{/9b/9	{99 ねあぶうおろれり	ねあ.ろれろおろ	ねあ.ろれろおれ
' hl5 Y9E	ねあぶうおろれる																				
Y9Ð! ¤[! / Y	ねあぶうおろれを	! ⊡[Y	D/t	t[w	a w		ょ	ょ					ゅ			ろ		t[! bb95 h. {h[9{/9b/9	{99 ねあぶうおろれを	ねあ.ろれろおろ	ねあ.ろれろおれ
Y9Ð! ¤[! / Y	ねあぶうおろれん	! ⊡[Y	D/t	t[w	a w		ょ	ょ		ゑ	を	ん	ゅ			ろ		t[! bb95 h. {h[9{/9b/9	{99 ねあぶうおろれん	ねあ.ろれろおろ	ねあ.ろれろおれ
Y9Ð. ¤fLDI ¤ Dwl Ð	ねあぶうおろれっ	. [ÐD	D/t	t[w	a w		ょ	ょ		ゑ	を	ん	ゅ			ろ		t[! bb95 h. {h[9{/9b/9	{99 ねあぶうおろれっ	ねあ.ろれろおろ	ねあ.ろれろおれ
Y9Ð/ ¤[wh° b	ねあぶうおろれわ	/ ⊡w	D/t	t[w	a w		ょ	ょ		ゑ	を	ん	ゅ			ろ		t[! bb95 h. {h[9{/9b/9	{99 ねあぶうおろれわ	ねあ.ろれろおろ	ねあ.ろれろおれ
Y9Ð5¤Dw99b	ねあぶうおろれか	5 □Dw	D/t	t[w	a w		ょ	ょ		ゑ	を	ん	ゅ			ろ		t[! bb95 h. {h[9{/9b/9	{99 ねあぶうおろれか	ねあ.ろれろおろ	ねあ.ろれろおれ
' hl5 Y9E	ねあぶうおろれが																				
Y9Ð! ¤[! / Y	ねあぶうおろれき	! ⊡[Y	D/t	t[w	a w		ょ	ょ					ゅ			ろ		t[! bb95 h. {h[9{/9b/9	{99 ねあぶうおろれき	ねあ.ろれろおろ	ねあ.ろれろおれ
Y9Ð! ¤[! / Y	ねあぶうおろれぎ	! ⊡[Y	D/t	t[w	a w		ょ	ょ		ゑ	を	ん	ゅ			ろ		t[! bb95 h. {h[9{/9b/9	{99 ねあぶうおろれぎ	ねあ.ろれろおろ	ねあ.ろれろおれ
Y9Ð! ¤[! / Y	ねあぶうおろれく	! ⊡[Y	D/t	t[w	a w						を	ん	ゅ			ろ		t[! bb95 h. {h[9{/9b/9	{99 ねあぶうおろれく	ねあ.ろれろおろ	ねあ.ろれろおれ
Y9Ð! ¤[! / Y	ねあぶうおろれぐ	! ⊡[Y	D/t	t[w	a w						を	ん	ゅ			ろ		t[! bb95 h. {h[9{/9b/9	{99 ねあぶうおろれぐ	ねあ.ろれろおろ	ねあ.ろれろおれ
Y9Ð! ¤[! / Y	ねあぶうおろれけ	! ⊡[Y	D/t	t[w	a w		ょ	ょ					ゅ			ろ		t[! bb95 h. {h[9{/9b/9	{99 ねあぶうおろれけ	ねあ.ろれろおろ	ねあ.ろれろおれ
Y9Ð! ¤[! / Y	ねあぶうおろれこ	! ⊡[Y	D/t	t[w	a w						を	ん	ゅ			ろ		t[! bb95 h. {h[9{/9b/9	{99 ねあぶうおろれこ	ねあ.ろれろおろ	ねあ.ろれろおれ
Y9Ð! ¤[! / Y	ねあぶうおろれさ	! ⊡[Y	D/t	t[w	a w		ょ	ょ					ゅ			ろ		t[! bb95 h. {h[9{/9b/9	{99 ねあぶうおろれさ	ねあ.ろれろおろ	ねあ.ろれろおれ
Y9Ð! ¤[! / Y	ねあぶうおろれし	! ⊡[Y	D/t	t[w	a w						を	ん	ゅ			ろ		t[! bb95 h. {h[9{/9b/9	{99 ねあぶうおろれし	ねあ.ろれろおろ	ねあ.ろれろおれ
Y9Ð! ¤[! / Y	ねあぶうおろれじ	! ⊡[Y	D/t	t[w	a w						を	ん	ゅ			ろ		t[! bb95 h. {h[9{/9b/9	{99 ねあぶうおろれじ	ねあ.ろれろおろ	ねあ.ろれろおれ
Y9Ð! ¤[! / Y	ねあぶうおろれす	! ⊡[Y	D/t	t[w	a w		ょ	ょ					ゅ			ろ		t[! bb95 h. {h[9{/9b/9	{99 ねあぶうおろれす	ねあ.ろれろおろ	ねあ.ろれろおれ
Y9Ð! ¤[! / Y	ねあぶうおろれず	! ⊡[Y	D/t	t[w	a w						を	ん	ゅ			ろ		t[! bb95 h. {h[9{/9b/9	{99 ねあぶうおろれず	ねあ.ろれろおろ	ねあ.ろれろおれ
Y9Ð! ¤[! / Y	ねあぶうおろれせ	! ⊡[Y	D/t	t[w	a w						を	ん	ゅ			ろ		t[! bb95 h. {h[9{/9b/9	{99 ねあぶうおろれせ	ねあ.ろれろおろ	ねあ.ろれろおれ
Y9Ð! ¤[! / Y	ねあぶうおろれぜ	! ⊡[Y	D/t	t[w	a w						を	ん	ゅ			ろ		t[! bb95 h. {h[9{/9b/9	{99 ねあぶうおろれぜ	ねあ.ろれろおろ	ねあ.ろれろおれ

! {{9a . [Ð59{/wlt ¤lhb	! {{9a . [Ðt! w¤ b- a . 9w	/ha thb9b¤ — ¤I 9tw9{9b/9hC! b! . . w9¹ L! ¤lhb lb5 L/! ¤9{ ¤I 9 tw9{9b/9hC¤I ! ¤/ha thb9b¤ — I h- {lbD Y9Ð h[hw	Dwha a 9¤ /! t	t[w	a ! ¤{9! [	. [h/Y95 ¤9wa lb! [{ — /! ¹ L¤Ð° L¤I ! b- a . 9wlb5 L/! ¤9{ . [h/Y95 ¤9wa lb! [th{L¤lhb / /! ¹ L¤Ð° L¤I h- ¤! b- a . 9wlb5 L/! ¤9{ ht9b ¤9wa lb! [th{L¤lhb — ろ	ゎ	わ	ゐ	ゑ	を	ん	ゔ	゛	ｽれ	ｽｽ	ｽゎ	{¤! ¤- {	/ha a 9b¤{	ht¤lhb! [! ¤¤! ¤/I a 9b¤{ {h[5 {9t9w! ¤9[Ð — . ! /Y{I 9[[° L¤I wL {	. ! /Y{I 9[[° L¤I h- ¤ wL {
Y9Ð! ☞[! /Y	[illegible]	! □[Y	D/t	t[w	a ⊠										ｽｲ	ｽｴ	ｽｷ	t[! bb95 h. {h[9{/9b/9	[illegible]	[illegible]	[illegible]
Y9Ð! ☞[! /Y	[illegible]	! □[Y	D/t	t[w	a ⊠				ð	ｽ	ｾ	ﾊ	ﾆ					t[! bb95 h. {h[9{/9b/9	[illegible]	[illegible]	[illegible]
Y9Ð! ☞[! /Y	[illegible]	! □[Y	D/t	t[w	a ⊠		ｷ		ð	ｽ			ﾆ		ｽｲ	ｽｴ		t[! bb95 h. {h[9{/9b/9	[illegible]	[illegible]	[illegible]
Y9Ð! ☞[! /Y	[illegible]	! □[Y	D/t	t[w	a ⊠							ﾊ						t[! bb95 h. {h[9{/9b/9	[illegible]	[illegible]	[illegible]
Y9Ð! ☞[! /Y	[illegible]	! □[Y	D/t	t[w	a ⊠		ｷ	ｵ	ð	ｽ	ｾ	ﾊ	ﾆ		ｽｲ	ｽｴ	ｽｷ	t[! bb95 h. {h[9{/9b/9	[illegible]	[illegible]	[illegible]
Y9Ð! ☞[! /Y	[illegible]	! □[Y	D/t	t[w	a ⊠		ｷ	ｵ	ð	ｽ					ｽｲ	ｽｴ	ｽｷ	t[! bb95 h. {h[9{/9b/9	[illegible]	[illegible]	[illegible]
Y9Ð! ☞[! /Y	[illegible]	! □[Y	D/t	t[w	a ⊠		ｷ	ｵ	ð	ｽ	ｾ	ﾊ			ｽｲ	ｽｴ	ｽｷ	t[! bb95 h. {h[9{/9b/9	[illegible]	[illegible]	[illegible]
Y9Ð! ☞[! /Y	[illegible]	! □[Y	D/t	t[w	a ⊠	ﾐ					ｾ	ﾊ						t[! bb95 h. {h[9{/9b/9	[illegible]	[illegible]	[illegible]
Y9Ð! ☞[! /Y	[illegible]	! □[Y	D/t	t[w	a ⊠										ｽｲ		ｽｷ	t[! bb95 h. {h[9{/9b/9	[illegible]	[illegible]	[illegible]
Y9Ð! ☞[! /Y	[illegible]	! □[Y	D/t	t[w	a ⊠		ｷ	ｵ								ｽｴ		t[! bb95 h. {h[9{/9b/9	[illegible]	[illegible]	[illegible]
Y9Ð! ☞[! /Y	[illegible]	! □[Y	D/t	t[w	a ⊠	ﾐ	ｷ	ｵ	ð	ｽ					ｽｲ	ｽｴ	ｽｷ	t[! bb95 h. {h[9{/9b/9	[illegible]	[illegible]	[illegible]
Y9Ð! ☞[! /Y	[illegible]	! □[Y	D/t	t[w	a ⊠											ｽｴ	ｽｷ	t[! bb95 h. {h[9{/9b/9	[illegible]	[illegible]	[illegible]
Y9Ð/¤5! wY Dw £	[illegible]	/ [5D	D/t	t[w	a ⊠													t[! bb95 h. {h[9{/9b/9	[illegible]	[illegible]	[illegible]
Y9Ð5¤{¤hb9 Dw £	[illegible]	5 [D	D/t	t[w	a ⊠													t[! bb95 h. {h[9{/9b/9	[illegible]	[illegible]	[illegible]
Y9Ð/¤5! wY Dw £	[illegible]	/ [5D	D/t	t[w	a ⊠	ﾐ	ｷ	ｵ	ð	ｽ	ｾ	ﾊ	ﾆ		ｽｲ	ｽｴ	ｽｷ	t[! bb95 h. {h[9{/9b/9	[illegible]	[illegible]	[illegible]
Y9Ð5¤{¤hb9 Dw £	[illegible]	5 [D	D/t	t[w	a ⊠	ﾐ	ｷ	ｵ	ð	ｽ	ｾ	ﾊ	ﾆ		ｽｲ	ｽｴ	ｽｷ	t[! bb95 h. {h[9{/9b/9	[illegible]	[illegible]	[illegible]
Y9Ð! ☞[! /Y	[illegible]	! □[Y	D/t	t[w	a ⊠						ｾ	ﾊ	ﾆ		ｽｲ	ｽｴ		t[! bb95 h. {h[9{/9b/9	[illegible]	[illegible]	[illegible]
Y9Ð! ☞[! /Y	[illegible]	! □[Y	D/t	t[w	a ⊠	ﾐ	ｷ	ｵ	ð	ｽ	ｾ	ﾊ					ｽｷ	t[! bb95 h. {h[9{/9b/9	[illegible]	[illegible]	[illegible]
Y9Ð! ☞[! /Y	[illegible]	! □[Y	D/t	t[w	a ⊠			ｵ	ð	ｽ	ｾ	ﾊ						t[! bb95 h. {h[9{/9b/9	[illegible]	[illegible]	[illegible]
Y9Ð! ☞[! /Y	[illegible]	! □[Y	D/t	t[w	a ⊠			ｵ	ð	ｽ	ｾ	ﾊ	ﾆ		ｽｲ	ｽｴ		t[! bb95 h. {h[9{/9b/9	[illegible]	[illegible]	[illegible]
Y9Ð! ☞[! /Y	[illegible]	! □[Y	D/t	t[w	a ⊠	ﾐ	ｷ	ｵ	ð	ｽ			ﾆ		ｽｲ	ｽｴ	ｽｷ	t[! bb95 h. {h[9{/9b/9	[illegible]	[illegible]	[illegible]
Y9Ð! ☞[! /Y	[illegible]	! □[Y	D/t	t[w	a ⊠		ｷ		ð			ﾊ	ﾆ		ｽｲ			t[! bb95 h. {h[9{/9b/9	[illegible]	[illegible]	[illegible]
Y9Ð! ☞[! /Y	[illegible]	! □[Y	D/t	t[w	a ⊠		ｷ					ﾊ	ﾆ					t[! bb95 h. {h[9{/9b/9	[illegible]	[illegible]	[illegible]
Y9Ð! ☞[! /Y	[illegible]	! □[Y	D/t	t[w	a ⊠		ｷ					ﾊ	ﾆ		ｽｲ			t[! bb95 h. {h[9{/9b/9	[illegible]	[illegible]	[illegible]
Y9Ð! ☞[! /Y	[illegible]	! □[Y	D/t	t[w	a ⊠								ﾆ					t[! bb95 h. {h[9{/9b/9	[illegible]	[illegible]	[illegible]
Y9Ð! ☞[! /Y	[illegible]	! □[Y	D/t	t[w	a ⊠	ﾐ		ｵ	ð	ｽ	ｾ		ﾆ		ｽｲ	ｽｴ	ｽｷ	t[! bb95 h. {h[9{/9b/9	[illegible]	[illegible]	[illegible]
Y9Ð! ☞[! /Y	[illegible]	! □[Y	D/t	t[w	a ⊠				ð				ﾆ		ｽｲ			t[! bb95 h. {h[9{/9b/9	[illegible]	[illegible]	[illegible]
Y9Ð! ☞[! /Y	[illegible]	! □[Y	D/t	t[w	a ⊠	ﾐ	ｷ	ｵ	ð		ｾ		ﾆ		ｽｲ	ｽｴ	ｽｷ	t[! bb95 h. {h[9{/9b/9	[illegible]	[illegible]	[illegible]
Y9Ð! ☞[! /Y	[illegible]	! □[Y	D/t	t[w	a ⊠	ﾐ	ｷ	ｵ								ｽｴ	ｽｷ	t[! bb95 h. {h[9{/9b/9	[illegible]	[illegible]	[illegible]
Y9Ð! ☞[! /Y	[illegible]	! □[Y	D/t	t[w	a ⊠						ｾ						ｽｷ	t[! bb95 h. {h[9{/9b/9	[illegible]	[illegible]	[illegible]
Y9Ð! ☞[! /Y	[illegible]	! □[Y	D/t	t[w	a ⊠	ﾐ	ｷ	ｵ	ð	ｽ		ﾊ	ﾆ		ｽｲ	ｽｴ		t[! bb95 h. {h[9{/9b/9	[illegible]	[illegible]	[illegible]
Y9Ð! ☞[! /Y	[illegible]	! □[Y	D/t	t[w	a ⊠	ﾐ	ｷ	ｵ	ð	ｽ	ｾ							t[! bb95 h. {h[9{/9b/9	[illegible]	[illegible]	[illegible]
Y9Ð! ☞[! /Y	[illegible]	! □[Y	D/t	t[w	a ⊠		ｷ		ð		ｾ		ﾆ		ｽｲ	ｽｴ		t[! bb95 h. {h[9{/9b/9	[illegible]	[illegible]	[illegible]
Y9Ð! ☞[! /Y	[illegible]	! □[Y	D/t	t[w	a ⊠	ﾐ	ｷ	ｵ	ð	ｽ	ｾ				ｽｲ	ｽｴ	ｽｷ	t[! bb95 h. {h[9{/9b/9	[illegible]	[illegible]	[illegible]
Y9Ð! ☞[! /Y	[illegible]	! □[Y	D/t	t[w	a ⊠						ｾ				ｽｲ	ｽｴ	ｽｷ	t[! bb95 h. {h[9{/9b/9	[illegible]	[illegible]	[illegible]
Y9Ð! ☞[! /Y	[illegible]	! □[Y	D/t	t[w	a ⊠	ﾐ		ｵ	ð	ｽ	ｾ	ﾊ	ﾆ		ｽｲ	ｽｴ	ｽｷ	t[! bb95 h. {h[9{/9b/9	[illegible]	[illegible]	[illegible]
Y9Ð5¤{¤hb9 Dw £	[illegible]	5 [D	D/t	t[w	a ⊠	ﾐ					ｾ	ﾊ						t[! bb95 h. {h[9{/9b/9	[illegible]	[illegible]	[illegible]
Y9Ð! ☞[! /Y	[illegible]	! □[Y	D/t	t[w	a ⊠		ｷ	ｵ					ﾆ					t[! bb95 h. {h[9{/9b/9	[illegible]	[illegible]	[illegible]
Y9Ð! ☞[! /Y	[illegible]	! □[Y	D/t	t[w	a ⊠	ﾐ						ﾊ						t[! bb95 h. {h[9{/9b/9	[illegible]	[illegible]	[illegible]
Y9Ð! ☞[! /Y	[illegible]	! □[Y	D/t	t[w	a ⊠	ﾐ					ｾ							t[! bb95 h. {h[9{/9b/9	[illegible]	[illegible]	[illegible]
Y9Ð! ☞[! /Y	[illegible]	! □[Y	D/t	t[w	a ⊠	ﾐ	ｷ	ｵ	ð	ｽ	ｾ		ﾆ					t[! bb95 h. {h[9{/9b/9	[illegible]	[illegible]	[illegible]
Y9Ð! ☞[! /Y	[illegible]	! □[Y	D/t	t[w	a ⊠	ﾐ						ﾊ					ｽｷ	t[! bb95 h. {h[9{/9b/9	[illegible]	[illegible]	[illegible]
Y9Ð! ☞[! /Y	[illegible]	! □[Y	D/t	t[w	a ⊠	ﾐ	ｷ	ｵ	ð	ｽ	ｾ	ﾊ	ﾆ				ｽｷ	t[! bb95 h. {h[9{/9b/9	[illegible]	[illegible]	[illegible]
Y9Ð! ☞[! /Y	[illegible]	! □[Y	D/t	t[w	a ⊠													t[! bb95 h. {h[9{/9b/9	[illegible]	[illegible]	[illegible]
Y9Ð! ☞[! /Y	[illegible]	! □[Y	D/t	t[w	a ⊠			ｵ	ð						ｽｲ	ｽｴ	ｽｷ	t[! bb95 h. {h[9{/9b/9	[illegible]	[illegible]	[illegible]
Y9Ð! ☞[! /Y	[illegible]	! □[Y	D/t	t[w	a ⊠	ﾐ	ｷ			ｽ	ｾ	ﾊ	ﾆ					t[! bb95 h. {h[9{/9b/9	[illegible]	[illegible]	[illegible]
Y9Ð! ☞[! /Y	[illegible]	! □[Y	D/t	t[w	a ⊠	ﾐ	ｷ			ｽ	ｾ	ﾊ	ﾆ			ｽｴ	ｽｷ	t[! bb95 h. {h[9{/9b/9	[illegible]	[illegible]	[illegible]
Y9Ð! ☞[! /Y	[illegible]	! □[Y	D/t	t[w	a ⊠	ﾐ	ｷ	ｵ	ð	ｽ	ｾ	ﾊ	ﾆ		ｽｲ			t[! bb95 h. {h[9{/9b/9	[illegible]	[illegible]	[illegible]
Y9Ð! ☞[! /Y	[illegible]	! □[Y	D/t	t[w	a ⊠				ð		ｾ				ｽｲ	ｽｴ	ｽｷ	t[! bb95 h. {h[9{/9b/9	[illegible]	[illegible]	[illegible]
Y9Ð! ☞[! /Y	[illegible]	! □[Y	D/t	t[w	a ⊠						ｾ					ｽｴ	ｽｷ	t[! bb95 h. {h[9{/9b/9	[illegible]	[illegible]	[illegible]
Y9Ð! ☞[! /Y	[illegible]	! □[Y	D/t	t[w	a ⊠	ﾐ	ｷ					ﾊ	ﾆ					t[! bb95 h. {h[9{/9b/9	[illegible]	[illegible]	[illegible]
Y9Ð! ☞[! /Y	[illegible]	! □[Y	D/t	t[w	a ⊠	ﾐ	ｷ	ｵ					ﾆ		ｽｲ	ｽｴ	ｽｷ	t[! bb95 h. {h[9{/9b/9	[illegible]	[illegible]	[illegible]
Y9Ð! ☞[! /Y	[illegible]	! □[Y	D/t	t[w	a ⊠	ﾐ	ｷ					ﾊ	ﾆ				ｽｷ	t[! bb95 h. {h[9{/9b/9	[illegible]	[illegible]	[illegible]
Y9Ð. ¤[lÐI ¤ Dw £	[illegible]	. [D	D/t	t[w	a ⊠										ｽｲ	ｽｴ		t[! bb95 h. {h[9{/9b/9	[illegible]	[illegible]	[illegible]
Y9Ð! ☞[! /Y	[illegible]	! □[Y	D/t	t[w	a ⊠	ﾐ	ｷ	ｵ	ð			ﾊ	ﾆ		ｽｲ		ｽｷ	t[! bb95 h. {h[9{/9b/9	[illegible]	[illegible]	[illegible]
Y9Ð! ☞[! /Y	[illegible]	! □[Y	D/t	t[w	a ⊠	ﾐ	ｷ	ｵ	ð			ﾊ	ﾆ		ｽｲ			t[! bb95 h. {h[9{/9b/9	[illegible]	[illegible]	[illegible]
Y9Ð. ¤[lÐI ¤ Dw £	[illegible]	. [D	D/t	t[w	a ⊠										ｽｲ	ｽｴ	ｽｷ	t[! bb95 h. {h[9{/9b/9	[illegible]	[illegible]	[illegible]
Y9Ð. ¤[lÐI ¤ Dw £	[illegible]	. [D	D/t	t[w	a ⊠	ﾐ	ｷ	ｵ	ð	ｽ	ｾ	ﾊ			ｽｲ	ｽｴ	ｽｷ	t[! bb95 h. {h[9{/9b/9	[illegible]	[illegible]	[illegible]
Y9Ð! ☞[! /Y	[illegible]	! □[Y	D/t	t[w	a ⊠	ﾐ	ｷ	ｵ	ð	ｽ		ﾊ	ﾆ					t[! bb95 h. {h[9{/9b/9	[illegible]	[illegible]	[illegible]
Y9Ð! ☞[! /Y	[illegible]	! □[Y	D/t	t[w	a ⊠							ﾊ	ﾆ		ｽｲ	ｽｴ	ｽｷ	t[! bb95 h. {h[9{/9b/9	[illegible]	[illegible]	[illegible]
Y9Ð! ☞[! /Y	[illegible]	! □[Y	D/t	t[w	a ⊠	ﾐ							ﾆ		ｽｲ	ｽｴ		t[! bb95 h. {h[9{/9b/9	[illegible]	[illegible]	[illegible]
Y9Ð! ☞[! /Y	[illegible]	! □[Y	D/t	t[w	a ⊠	ﾐ			ð							ｽｴ		t[! bb95 h. {h[9{/9b/9	[illegible]	[illegible]	[illegible]
Y9Ð! ☞[! /Y	[illegible]	! □[Y	D/t	t[w	a ⊠	ﾐ	ｷ		ð	ｽ	ｾ	ﾊ			ｽｲ	ｽｴ	ｽｷ	t[! bb95 h. {h[9{/9b/9	[illegible]	[illegible]	[illegible]
Y9Ð! ☞[! /Y	[illegible]	! □[Y	D/t	t[w	a ⊠								ﾆ					t[! bb95 h. {h[9{/9b/9	[illegible]	[illegible]	[illegible]
Y9Ð! ☞[! /Y	[illegible]	! □[Y	D/t	t[w	a ⊠			ｵ	ð	ｽ	ｾ		ﾆ		ｽｲ	ｽｴ		t[! bb95 h. {h[9{/9b/9	[illegible]	[illegible]	[illegible]
Y9Ð! ☞[! /Y	[illegible]	! □[Y	D/t	t[w	a ⊠			ｵ			ｾ	ﾊ	ﾆ		ｽｲ			t[! bb95 h. {h[9{/9b/9	[illegible]	[illegible]	[illegible]
Y9Ð! ☞[! /Y	[illegible]	! □[Y	D/t	t[w	a ⊠						ｾ	ﾊ	ﾆ					t[! bb95 h. {h[9{/9b/9	[illegible]	[illegible]	[illegible]
Y9Ð! ☞[! /Y	[illegible]	! □[Y	D/t	t[w	a ⊠					ｽ	ｾ	ﾊ	ﾆ			ｽｴ		t[! bb95 h. {h[9{/9b/9	[illegible]	[illegible]	[illegible]
Y9Ð! ☞[! /Y	[illegible]	! □[Y	D/t	t[w	a ⊠	ﾐ	ｷ											t[! bb95 h. {h[9{/9b/9	[illegible]	[illegible]	[illegible]
Y9Ð! ☞[! /Y	[illegible]	! □[Y	D/t	t[w	a ⊠	ﾐ	ｷ	ｵ	ð	ｽ	ｾ	ﾊ	ﾆ					t[! bb95 h. {h[9{/9b/9	[illegible]	[illegible]	[illegible]
Y9Ð! ☞[! /Y	[illegible]	! □[Y	D/t	t[w	a ⊠	ﾐ	ｷ	ｵ	ð	ｽ	ｾ	ﾊ	ﾆ					t[! bb95 h. {h[9{/9b/9	[illegible]	[illegible]	[illegible]
Y9Ð/¤5! wY Dw £	[illegible]	/ [5D	D/t	t[w	a ⊠	ﾐ					ｾ	ﾊ						t[! bb95 h. {h[9{/9b/9	[illegible]	[illegible]	[illegible]
Y9Ð/☞wh° b	[illegible]	/ □w	D/t	t[w	a ⊠	ﾐ	ｷ	ｵ	ð	ｽ	ｾ							t[! bb95 h. {h[9{/9b/9	[illegible]	[illegible]	[illegible]

molex

a Æゟれゎ㠠 [!59{9![95!{{Ða!¤{9![
.ha !b5 tĿb h-¤{I 99¤

!{{9a.[Ð59{/wĿt¤Ŀhb	!{{9a.[Ðt!w¤ b-a.9w	/ha thb9b¤ (¤I 9tw9{9b/9hC!b!..w9¹Ŀ!¤Ŀhb Ŀb5Ŀ/!¤9{ ¤I 9 tw9{9b/9hC¤I!¤/ha thb9b¤) Ih-{ĿbD Y9Ð..h[hw	Dwha a 9¤ /!t	t[w	a!¤{9![	.[h/Y95 ¤9wa Ŀb![{ (/!¹Ŀ¤Ð° Ŀ¤I ! b-a.9wĿb5Ŀ/!¤9{.[h/Y95 ¤9wa Ŀb![th{Ŀ¤Ŀhb / /!¹Ŀ¤Ð° Ŀ¤I h-¤! b-a.9wĿb5Ŀ/!¤9{ ht9b ¤9wa Ŀb![th{Ŀ¤Ŀhb) ろ	ゎ	わ	ゐ	ゑ	を	ん	ゔ	゛	ゟれ	ゟろ	ゟゎ	{¤!¤-{	/ha a 9b¤{	ht¤Ŀhb![!¤¤!¤/I a 9b¤{ {h[5 {9t9w!¤9[Ð: .!/Y{I9[[° Ŀ¤I wĿ{	.!/Y{I9[[° Ŀ¤I h-¤ wĿ{
Y9Ð/☞wh° b	[illegible]	/⊡w	D/t	t[w	a ⊠	ミ	ｫ			ゑ	ぇ							t[!bb95 h.{h[9{/9b/9	{99 [illegible]	[illegible]	[illegible]
Y9Ð!☞[!/Y	[illegible]	!⊡[Y	D/t	t[w	a ⊠			ｵ				ｶ			ｦ	ﾃ	ｽ	t[!bb95 h.{h[9{/9b/9	{99 [illegible]	[illegible]	[illegible]
Y9Ð!☞[!/Y	[illegible]	!⊡[Y	D/t	t[w	a ⊠			ｵ							ｦ	ﾃ	ｽ	t[!bb95 h.{h[9{/9b/9	{99 [illegible]	[illegible]	[illegible]
Y9Ð!☞[!/Y	[illegible]	!⊡[Y	D/t	t[w	a ⊠			ｵ										t[!bb95 h.{h[9{/9b/9	{99 [illegible]	[illegible]	[illegible]
Y9Ð!☞[!/Y	[illegible]	!⊡[Y	D/t	t[w	a ⊠					ゑ	ぇ	ｶ			ｦ	ﾃ		t[!bb95 h.{h[9{/9b/9	{99 [illegible]	[illegible]	[illegible]
Y9Ð!☞[!/Y	[illegible]	!⊡[Y	D/t	t[w	a ⊠							ｶ				ﾃ		t[!bb95 h.{h[9{/9b/9	{99 [illegible]	[illegible]	[illegible]
Y9Ð/☞5!wY DwĿ£	[illegible]	/5D	D/t	t[w	a ⊠	ミ	ｫ	ｵ	ã	ゑ	ぇ							t[!bb95 h.{h[9{/9b/9	{99 [illegible]	[illegible]	[illegible]
Y9Ð/☞5!wY DwĿ£	[illegible]	/5D	D/t	t[w	a ⊠	ミ	ｫ			ゑ	ぇ							t[!bb95 h.{h[9{/9b/9	{99 [illegible]	[illegible]	[illegible]
Y9Ð!☞[!/Y	[illegible]	!⊡[Y	D/t	t[w	a ⊠	ミ	ｫ	ｵ	ã						ｦ	ﾃ	ｽ	t[!bb95 h.{h[9{/9b/9	{99 [illegible]	[illegible]	[illegible]
Y9Ð!☞[!/Y	[illegible]	!⊡[Y	D/t	t[w	a ⊠	ミ	ｫ				ぇ	ｶ	ﾆ				ｽ	t[!bb95 h.{h[9{/9b/9	{99 [illegible]	[illegible]	[illegible]
Y9Ð!☞[!/Y	[illegible]	!⊡[Y	D/t	t[w	a ⊠				ã	ゑ		ｶ	ﾆ		ｦ			t[!bb95 h.{h[9{/9b/9	{99 [illegible]	[illegible]	[illegible]
Y9Ð!☞[!/Y	[illegible]	!⊡[Y	D/t	t[w	a ⊠				ã						ｦ			t[!bb95 h.{h[9{/9b/9	{99 [illegible]	[illegible]	[illegible]
Y9Ð!☞[!/Y	[illegible]	!⊡[Y	D/t	t[w	a ⊠				ã	ゑ			ﾆ		ｦ			t[!bb95 h.{h[9{/9b/9	{99 [illegible]	[illegible]	[illegible]
Y9Ð!☞[!/Y	[illegible]	!⊡[Y	D/t	t[w	a ⊠	ミ	ｫ		ã	ゑ	ぇ	ｶ					ｽ	t[!bb95 h.{h[9{/9b/9	{99 [illegible]	[illegible]	[illegible]
Y9Ð!☞Ð9[[h°	[illegible]	!Ð[	D/t	t[w	a ⊠													t[!bb95 h.{h[9{/9b/9	{99 [illegible]	[illegible]	[illegible]
Y9Ð.☞[ĿDI¤DwĿ£	[illegible]	.ĿD	D/t	t[w	a ⊠					ゑ			ﾆ					t[!bb95 h.{h[9{/9b/9	{99 [illegible]	[illegible]	[illegible]
Y9Ð.☞[ĿDI¤DwĿ£	[illegible]	.ĿD	D/t	t[w	a ⊠					ゑ			ﾆ			ﾃ	ｽ	t[!bb95 h.{h[9{/9b/9	{99 [illegible]	[illegible]	[illegible]
Y9Ð.☞[ĿDI¤DwĿ£	[illegible]	.ĿD	D/t	t[w	a ⊠			ｵ	ã	ゑ			ﾆ		ｦ	ﾃ	ｽ	t[!bb95 h.{h[9{/9b/9	{99 [illegible]	[illegible]	[illegible]
Y9Ð.☞[ĿDI¤DwĿ£	[illegible]	.ĿD	D/t	t[w	a ⊠	ミ	ｫ	ｵ	ã	ゑ			ﾆ		ｦ	ﾃ	ｽ	t[!bb95 h.{h[9{/9b/9	{99 [illegible]	[illegible]	[illegible]
Y9Ð!☞[!/Y	[illegible]	!⊡[Y	D/t	t[w	a ⊠	ミ	ｫ	ｵ		ゑ						ﾃ		t[!bb95 h.{h[9{/9b/9	{99 [illegible]	[illegible]	[illegible]
Y9Ð!☞[!/Y	[illegible]	!⊡[Y	D/t	t[w	a ⊠		ｫ	ｵ		ゑ						ﾃ		t[!bb95 h.{h[9{/9b/9	{99 [illegible]	[illegible]	[illegible]
Y9Ð!☞[!/Y	[illegible]	!⊡[Y	D/t	t[w	a ⊠	ミ	ｫ	ｵ								ﾃ		t[!bb95 h.{h[9{/9b/9	{99 [illegible]	[illegible]	[illegible]
Y9Ð!☞[!/Y	[illegible]	!⊡[Y	D/t	t[w	a ⊠	ミ	ｫ	ｵ	ã	ゑ						ﾃ	ｽ	t[!bb95 h.{h[9{/9b/9	{99 [illegible]	[illegible]	[illegible]
Y9Ð!☞[!/Y	[illegible]	!⊡[Y	D/t	t[w	a ⊠		ｫ	ｵ	ã	ゑ						ﾃ	ｽ	t[!bb95 h.{h[9{/9b/9	{99 [illegible]	[illegible]	[illegible]
Y9Ð!☞[!/Y	[illegible]	!⊡[Y	D/t	t[w	a ⊠	ミ												t[!bb95 h.{h[9{/9b/9	{99 [illegible]	[illegible]	[illegible]
Y9Ð!☞[!/Y	[illegible]	!⊡[Y	D/t	t[w	a ⊠	ミ	ｫ	ｵ										t[!bb95 h.{h[9{/9b/9	{99 [illegible]	[illegible]	[illegible]
Y9Ð.☞[ĿDI¤DwĿ£	[illegible]	.ĿD	D/t	t[w	a ⊠	ミ	ｫ	ｵ	ã		ぇ					ﾃ	ｽ	t[!bb95 h.{h[9{/9b/9	{99 [illegible]	[illegible]	[illegible]
Y9Ð!☞[!/Y	[illegible]	!⊡[Y	D/t	t[w	a ⊠				ã			ｶ	ﾆ					t[!bb95 h.{h[9{/9b/9	{99 [illegible]	[illegible]	[illegible]
Y9Ð!☞[!/Y	[illegible]	!⊡[Y	D/t	t[w	a ⊠		ｫ						ﾆ					t[!bb95 h.{h[9{/9b/9	{99 [illegible]	[illegible]	[illegible]
Y9Ð!☞[!/Y	[illegible]	!⊡[Y	D/t	t[w	a ⊠		ｫ		ã				ﾆ		ｦ			t[!bb95 h.{h[9{/9b/9	{99 [illegible]	[illegible]	[illegible]
Y9Ð!☞[!/Y	[illegible]	!⊡[Y	D/t	t[w	a ⊠	ミ	ｫ	ｵ	ã	ゑ	ぇ		ﾆ		ｦ	ﾃ	ｽ	t[!bb95 h.{h[9{/9b/9	{99 [illegible]	[illegible]	[illegible]
Y9Ð!☞[!/Y	[illegible]	!⊡[Y	D/t	t[w	a ⊠	ミ					ぇ	ｶ	ﾆ				ｽ	t[!bb95 h.{h[9{/9b/9	{99 [illegible]	[illegible]	[illegible]
Y9Ð!☞[!/Y	[illegible]	!⊡[Y	D/t	t[w	a ⊠		ｫ	ｵ	ã		ぇ		ﾆ		ｦ	ﾃ	ｽ	t[!bb95 h.{h[9{/9b/9	{99 [illegible]	[illegible]	[illegible]
Y9Ð!☞[!/Y	[illegible]	!⊡[Y	D/t	t[w	a ⊠		ｫ				ぇ	ｶ	ﾆ		ｦ	ﾃ		t[!bb95 h.{h[9{/9b/9	{99 [illegible]	[illegible]	[illegible]
Y9Ð!☞[!/Y	[illegible]	!⊡[Y	D/t	t[w	a ⊠	ミ	ｫ	ｵ	ã		ぇ				ｦ	ﾃ	ｽ	t[!bb95 h.{h[9{/9b/9	{99 [illegible]	[illegible]	[illegible]
Y9Ð!☞[!/Y	[illegible]	!⊡[Y	D/t	t[w	a ⊠					ゑ			ﾆ					t[!bb95 h.{h[9{/9b/9	{99 [illegible]	[illegible]	[illegible]
Y9Ð!☞[!/Y	[illegible]	!⊡[Y	D/t	t[w	a ⊠				ã						ｦ			t[!bb95 h.{h[9{/9b/9	{99 [illegible]	[illegible]	[illegible]
Y9Ð!☞[!/Y	[illegible]	!⊡[Y	D/t	t[w	a ⊠				ã			ｶ	ﾆ		ｦ	ﾃ	ｽ	t[!bb95 h.{h[9{/9b/9	{99 [illegible]	[illegible]	[illegible]
Y9Ð!☞[!/Y	[illegible]	!⊡[Y	D/t	t[w	a ⊠					ゑ	ぇ		ﾆ		ｦ	ﾃ	ｽ	t[!bb95 h.{h[9{/9b/9	{99 [illegible]	[illegible]	[illegible]
Y9Ð!☞[!/Y	[illegible]	!⊡[Y	D/t	t[w	a ⊠				ã	ゑ	ぇ		ﾆ		ｦ	ﾃ	ｽ	t[!bb95 h.{h[9{/9b/9	{99 [illegible]	[illegible]	[illegible]
Y9Ð!☞[!/Y	[illegible]	!⊡[Y	D/t	t[w	a ⊠	ミ	ｫ	ｵ		ゑ	ぇ	ｶ	ﾆ			ﾃ	ｽ	t[!bb95 h.{h[9{/9b/9	{99 [illegible]	[illegible]	[illegible]
Y9Ð!☞[!/Y	[illegible]	!⊡[Y	D/t	t[w	a ⊠				ã	ゑ		ｶ	ﾆ		ｦ	ﾃ	ｽ	t[!bb95 h.{h[9{/9b/9	{99 [illegible]	[illegible]	[illegible]
Y9Ð!☞[!/Y	[illegible]	!⊡[Y	D/t	t[w	a ⊠				ã			ｶ			ｦ			t[!bb95 h.{h[9{/9b/9	{99 [illegible]	[illegible]	[illegible]
Y9Ð!☞[!/Y	[illegible]	!⊡[Y	D/t	t[w	a ⊠						ぇ	ｶ	ﾆ		ｦ	ﾃ	ｽ	t[!bb95 h.{h[9{/9b/9	{99 [illegible]	[illegible]	[illegible]
Y9Ð!☞[!/Y	[illegible]	!⊡[Y	D/t	t[w	a ⊠	ミ	ｫ				ぇ	ｶ				ﾃ	ｽ	t[!bb95 h.{h[9{/9b/9	{99 [illegible]	[illegible]	[illegible]
Y9Ð!☞[!/Y	[illegible]	!⊡[Y	D/t	t[w	a ⊠					ゑ			ﾆ		ｦ			t[!bb95 h.{h[9{/9b/9	{99 [illegible]	[illegible]	[illegible]
Y9Ð!☞[!/Y	[illegible]	!⊡[Y	D/t	t[w	a ⊠	ミ	ｫ	ｵ	ã			ｶ	ﾆ		ｦ	ﾃ	ｽ	t[!bb95 h.{h[9{/9b/9	{99 [illegible]	[illegible]	[illegible]
Y9Ð!☞[!/Y	[illegible]	!⊡[Y	D/t	t[w	a ⊠				ã									t[!bb95 h.{h[9{/9b/9	{99 [illegible]	[illegible]	[illegible]
Y9Ð!☞[!/Y	[illegible]	!⊡[Y	D/t	t[w	a ⊠	ミ	ｫ	ｵ			ぇ	ｶ			ｦ	ﾃ	ｽ	t[!bb95 h.{h[9{/9b/9	{99 [illegible]	[illegible]	[illegible]
Y9Ð!☞[!/Y	[illegible]	!⊡[Y	D/t	t[w	a ⊠							ｶ	ﾆ			ﾃ		t[!bb95 h.{h[9{/9b/9	{99 [illegible]	[illegible]	[illegible]
Y9Ð!☞[!/Y	[illegible]	!⊡[Y	D/t	t[w	a ⊠	ミ		ｵ		ゑ			ﾆ		ｦ		ｽ	t[!bb95 h.{h[9{/9b/9	{99 [illegible]	[illegible]	[illegible]
Y9Ð!☞[!/Y	[illegible]	!⊡[Y	D/t	t[w	a ⊠		ｫ		ã		ぇ	ｶ				ﾃ		t[!bb95 h.{h[9{/9b/9	{99 [illegible]	[illegible]	[illegible]
Y9Ð!☞[!/Y	[illegible]	!⊡[Y	D/t	t[w	a ⊠		ｫ								ｦ	ﾃ	ｽ	t[!bb95 h.{h[9{/9b/9	{99 [illegible]	[illegible]	[illegible]
Y9Ð!☞[!/Y	[illegible]	!⊡[Y	D/t	t[w	a ⊠							ｶ			ｦ			t[!bb95 h.{h[9{/9b/9	{99 [illegible]	[illegible]	[illegible]
Y9Ð!☞[!/Y	[illegible]	!⊡[Y	D/t	t[w	a ⊠		ｫ		ã			ｶ						t[!bb95 h.{h[9{/9b/9	{99 [illegible]	[illegible]	[illegible]
Y9Ð!☞[!/Y	[illegible]	!⊡[Y	D/t	t[w	a ⊠	ミ	ｫ	ｵ	ã		ぇ				ｦ	ﾃ	ｽ	t[!bb95 h.{h[9{/9b/9	{99 [illegible]	[illegible]	[illegible]
Y9Ð!☞[!/Y	[illegible]	!⊡[Y	D/t	t[w	a ⊠	ミ		ｵ		ゑ						ﾃ	ｽ	t[!bb95 h.{h[9{/9b/9	{99 [illegible]	[illegible]	[illegible]
Y9Ð!☞[!/Y	[illegible]	!⊡[Y	D/t	t[w	a ⊠	ミ		ｵ		ゑ			ﾆ		ｦ	ﾃ	ｽ	t[!bb95 h.{h[9{/9b/9	{99 [illegible]	[illegible]	[illegible]
Y9Ð!☞[!/Y	[illegible]	!⊡[Y	D/t	t[w	a ⊠		ｫ					ｶ	ﾆ					t[!bb95 h.{h[9{/9b/9	{99 [illegible]	[illegible]	[illegible]
Y9Ð!☞[!/Y	[illegible]	!⊡[Y	D/t	t[w	a ⊠		ｫ		ã			ｶ	ﾆ					t[!bb95 h.{h[9{/9b/9	{99 [illegible]	[illegible]	[illegible]
Y9Ð!☞[!/Y	[illegible]	!⊡[Y	D/t	t[w	a ⊠				ã	ゑ	ぇ		ﾆ		ｦ	ﾃ		t[!bb95 h.{h[9{/9b/9	{99 [illegible]	[illegible]	[illegible]
Y9Ð!☞[!/Y	[illegible]	!⊡[Y	D/t	t[w	a ⊠	ミ	ｫ	ｵ	ã			ｶ	ﾆ		ｦ	ﾃ		t[!bb95 h.{h[9{/9b/9	{99 [illegible]	[illegible]	[illegible]
Y9Ð!☞[!/Y	[illegible]	!⊡[Y	D/t	t[w	a ⊠			ｵ	ã						ｦ			t[!bb95 h.{h[9{/9b/9	{99 [illegible]	[illegible]	[illegible]
Y9Ð!☞[!/Y	[illegible]	!⊡[Y	D/t	t[w	a ⊠			ｵ	ã							ﾃ	ｽ	t[!bb95 h.{h[9{/9b/9	{99 [illegible]	[illegible]	[illegible]
Y9Ð!☞[!/Y	[illegible]	!⊡[Y	D/t	t[w	a ⊠	ミ	ｫ	ｵ	ã		ぇ	ｶ	ﾆ		ｦ	ﾃ		t[!bb95 h.{h[9{/9b/9	{99 [illegible]	[illegible]	[illegible]
Y9Ð!☞[!/Y	[illegible]	!⊡[Y	D/t	t[w	a ⊠	ミ	ｫ	ｵ	ã	ゑ	ぇ	ｶ	ﾆ				ｽ	t[!bb95 h.{h[9{/9b/9	{99 [illegible]	[illegible]	[illegible]
Y9Ð!☞[!/Y	[illegible]	!⊡[Y	D/t	t[w	a ⊠	ミ	ｫ	ｵ							ｦ	ﾃ	ｽ	t[!bb95 h.{h[9{/9b/9	{99 [illegible]	[illegible]	[illegible]
Y9Ð!☞[!/Y	[illegible]	!⊡[Y	D/t	t[w	a ⊠	ミ	ｫ	ｵ			ぇ					ﾃ	ｽ	t[!bb95 h.{h[9{/9b/9	{99 [illegible]	[illegible]	[illegible]
Y9Ð!☞[!/Y	[illegible]	!⊡[Y	D/t	t[w	a ⊠	ミ		ｵ	ã							ﾃ		t[!bb95 h.{h[9{/9b/9	{99 [illegible]	[illegible]	[illegible]
Y9Ð!☞[!/Y	[illegible]	!⊡[Y	D/t	t[w	a ⊠	ミ	ｫ	ｵ			ぇ				ｦ	ﾃ	ｽ	t[!bb95 h.{h[9{/9b/9	{99 [illegible]	[illegible]	[illegible]
Y9Ð!☞[!/Y	[illegible]	!⊡[Y	D/t	t[w	a ⊠	ミ		ｵ	ã							ﾃ	ｽ	t[!bb95 h.{h[9{/9b/9	{99 [illegible]	[illegible]	[illegible]
Y9Ð!☞[!/Y	[illegible]	!⊡[Y	D/t	t[w	a ⊠				ã	ゑ		ｶ				ﾃ	ｽ	t[!bb95 h.{h[9{/9b/9	{99 [illegible]	[illegible]	[illegible]
Y9Ð.☞[ĿDI¤DwĿ£	[illegible]	.ĿD	D/t	t[w	a ⊠	ミ	ｫ	ｵ	ã				ﾆ		ｦ	ﾃ	ｽ	t[!bb95 h.{h[9{/9b/9	{99 [illegible]	[illegible]	[illegible]

a Æ3ｦれゎÆを [!59{9![95!{{Ða!¤{9![
.ha !b5 tLb h-¤{I 99¤

!{{9a.[Ð59{/wLt¤Lhb	!{{9a.[Ðt!w¤ b-a.9w	/ha thb9b¤				.[h/Y95 ¤9wa Lb![{												{¤!¤-{	/ha a 9b¤{	ht¤Lhb![!¤¤!¤/I a 9b¤{{h[5{9t9w!¤9[Ð	
		¤I 9tw9{9b/9hC!b!..w9¹L!¤Lhb Lb5L/!¤9{¤I 9 tw9{9b/9hC¤I!¤/ha thb9b¤				/!¹L¤Ð° L¤I ! b-a.9wLb5L/!¤9{.[h/Y95 ¤9wa Lb![th{L¤Lhb /!¹L¤Ð° L¤I h-¤! b-a.9wLb5L/!¤9{ht9b ¤9wa Lb![th{L¤Lhb															
		I h-{LbD Y9ÐLh[hw	Dwha a 9¤ /!t	t[w	a!¤{9![	ろ	ゎ	わ	ゐ	ゑ	を	ん	ゔ	゛	ｦれ	ｦろ	ｦゎ			.!/Y{I 9[[° L¤I wL{	.!/Y{I 9[[° L¤I h-¤ wL{
Y9Ð.☞[DI ¤ Dw! £	[illegible]	.[D	D/t	t[w	a ☒	ミ	ｨ	ｵ	ð				ﾆ		ｦｵ			t[! bb95 h. {h[9{/9b/9	{99 [illegible]	[illegible]	[illegible]
Y9Ð!☞[!/Y	[illegible]	!☐[Y	D/t	t[w	a ☒	ミ					を	ﾉ	ﾆ		ｦｵ			t[! bb95 h. {h[9{/9b/9	{99 [illegible]	[illegible]	[illegible]
Y9Ð!☞[!/Y	[illegible]	!☐[Y	D/t	t[w	a ☒				ð		を		ﾆ					t[! bb95 h. {h[9{/9b/9	{99 [illegible]	[illegible]	[illegible]
Y9Ð!☞[!/Y	[illegible]	!☐[Y	D/t	t[w	a ☒				ð	ゑ	を	ﾉ				ｦｴ	ｦｨ	t[! bb95 h. {h[9{/9b/9	{99 [illegible]	[illegible]	[illegible]
Y9Ð!☞[!/Y	[illegible]	!☐[Y	D/t	t[w	a ☒	ミ	ｨ	ｵ	ð	ゑ	を	ﾉ	ﾆ			ｦｴ	ｦｨ	t[! bb95 h. {h[9{/9b/9	{99 [illegible]	[illegible]	[illegible]
Y9Ð!☞[!/Y	[illegible]	!☐[Y	D/t	t[w	a ☒	ミ	ｨ	ｵ				ﾉ	ﾆ					t[! bb95 h. {h[9{/9b/9	{99 [illegible]	[illegible]	[illegible]
Y9Ð!☞[!/Y	[illegible]	!☐[Y	D/t	t[w	a ☒	ミ	ｨ	ｵ				ﾉ	ﾆ		ｦｵ			t[! bb95 h. {h[9{/9b/9	{99 [illegible]	[illegible]	[illegible]
Y9Ð!☞[!/Y	[illegible]	!☐[Y	D/t	t[w	a ☒				ð	ゑ	を		ﾆ					t[! bb95 h. {h[9{/9b/9	{99 [illegible]	[illegible]	[illegible]
Y9Ð!☞[!/Y	[illegible]	!☐[Y	D/t	t[w	a ☒					ゑ	を	ﾉ	ﾆ		ｦｵ	ｦｴ	ｦｨ	t[! bb95 h. {h[9{/9b/9	{99 [illegible]	[illegible]	[illegible]
Y9Ð!☞[!/Y	[illegible]	!☐[Y	D/t	t[w	a ☒					ゑ	を	ﾉ	ﾆ				ｦｨ	t[! bb95 h. {h[9{/9b/9	{99 [illegible]	[illegible]	[illegible]
Y9Ð!☞[!/Y	[illegible]	!☐[Y	D/t	t[w	a ☒							ﾉ	ﾆ				ｦｨ	t[! bb95 h. {h[9{/9b/9	{99 [illegible]	[illegible]	[illegible]
Y9Ð!☞[!/Y	[illegible]	!☐[Y	D/t	t[w	a ☒		ｨ	ｵ		ゑ	を	ﾉ			ｦｵ	ｦｴ	ｦｨ	t[! bb95 h. {h[9{/9b/9	{99 [illegible]	[illegible]	[illegible]
Y9Ð!☞[!/Y	[illegible]	!☐[Y	D/t	t[w	a ☒			ｵ							ｦｵ	ｦｴ	ｦｨ	t[! bb95 h. {h[9{/9b/9	{99 [illegible]	[illegible]	[illegible]
Y9Ð!☞[!/Y	[illegible]	!☐[Y	D/t	t[w	a ☒				ð	ゑ	を	ﾉ	ﾆ		ｦｵ	ｦｴ	ｦｨ	t[! bb95 h. {h[9{/9b/9	{99 [illegible]	[illegible]	[illegible]
Y9Ð!☞[!/Y	[illegible]	!☐[Y	D/t	t[w	a ☒			ｵ	ð	ゑ	を	ﾉ	ﾆ		ｦｵ	ｦｴ	ｦｨ	t[! bb95 h. {h[9{/9b/9	{99 [illegible]	[illegible]	[illegible]
Y9Ð!☞[!/Y	[illegible]	!☐[Y	D/t	t[w	a ☒	ミ	ｨ	ｵ	ð				ﾆ					t[! bb95 h. {h[9{/9b/9	{99 [illegible]	[illegible]	[illegible]
Y9Ð!☞[!/Y	[illegible]	!☐[Y	D/t	t[w	a ☒		ｨ	ｵ										t[! bb95 h. {h[9{/9b/9	{99 [illegible]	[illegible]	[illegible]
Y9Ð!☞[!/Y	[illegible]	!☐[Y	D/t	t[w	a ☒								ﾆ		ｦｵ	ｦｴ		t[! bb95 h. {h[9{/9b/9	{99 [illegible]	[illegible]	[illegible]
Y9Ð!☞[!/Y	[illegible]	!☐[Y	D/t	t[w	a ☒	ミ		ｵ		ゑ						ｦｴ		t[! bb95 h. {h[9{/9b/9	{99 [illegible]	[illegible]	[illegible]
Y9Ð!☞[!/Y	[illegible]	!☐[Y	D/t	t[w	a ☒	ミ		ｵ		ゑ			ﾆ		ｦｵ	ｦｴ		t[! bb95 h. {h[9{/9b/9	{99 [illegible]	[illegible]	[illegible]
Y9Ð!☞[!/Y	[illegible]	!☐[Y	D/t	t[w	a ☒		ｨ	ｵ		ゑ	を	ﾉ				ｦｴ	ｦｨ	t[! bb95 h. {h[9{/9b/9	{99 [illegible]	[illegible]	[illegible]
Y9Ð!☞[!/Y	[illegible]	!☐[Y	D/t	t[w	a ☒	ミ			ð	ゑ	を		ﾆ		ｦｵ		ｦｨ	t[! bb95 h. {h[9{/9b/9	{99 [illegible]	[illegible]	[illegible]
Y9Ð!☞[!/Y	[illegible]	!☐[Y	D/t	t[w	a ☒	ミ			ð	ゑ			ﾆ		ｦｵ		ｦｨ	t[! bb95 h. {h[9{/9b/9	{99 [illegible]	[illegible]	[illegible]
Y9Ð!☞[!/Y	[illegible]	!☐[Y	D/t	t[w	a ☒	ミ	ｨ	ｵ	ð	ゑ			ﾆ		ｦｵ	ｦｴ	ｦｨ	t[! bb95 h. {h[9{/9b/9	{99 [illegible]	[illegible]	[illegible]
Y9Ð!☞[!/Y	[illegible]	!☐[Y	D/t	t[w	a ☒		ｨ	ｵ		ゑ	を	ﾉ			ｦｵ	ｦｴ	ｦｨ	t[! bb95 h. {h[9{/9b/9	{99 [illegible]	[illegible]	[illegible]
Y9Ð!☞[!/Y	[illegible]	!☐[Y	D/t	t[w	a ☒	ミ	ｨ	ｵ	ð				ﾆ					t[! bb95 h. {h[9{/9b/9	{99 [illegible]	[illegible]	[illegible]
Y9Ð!☞[!/Y	[illegible]	!☐[Y	D/t	t[w	a ☒		ｨ	ｵ										t[! bb95 h. {h[9{/9b/9	{99 [illegible]	[illegible]	[illegible]
Y9Ð!☞[!/Y	[illegible]	!☐[Y	D/t	t[w	a ☒								ﾆ		ｦｵ	ｦｴ		t[! bb95 h. {h[9{/9b/9	{99 [illegible]	[illegible]	[illegible]
Y9Ð!☞[!/Y	[illegible]	!☐[Y	D/t	t[w	a ☒	ミ		ｵ		ゑ						ｦｴ		t[! bb95 h. {h[9{/9b/9	{99 [illegible]	[illegible]	[illegible]
Y9Ð!☞[!/Y	[illegible]	!☐[Y	D/t	t[w	a ☒	ミ		ｵ		ゑ			ﾆ		ｦｵ	ｦｴ		t[! bb95 h. {h[9{/9b/9	{99 [illegible]	[illegible]	[illegible]
Y9Ð!☞[!/Y	[illegible]	!☐[Y	D/t	t[w	a ☒		ｨ		ð		を	ﾉ	ﾆ		ｦｵ	ｦｴ	ｦｨ	t[! bb95 h. {h[9{/9b/9	{99 [illegible]	[illegible]	[illegible]
Y9Ð!☞[!/Y	[illegible]	!☐[Y	D/t	t[w	a ☒			ｵ	ð							ｦｴ	ｦｨ	t[! bb95 h. {h[9{/9b/9	{99 [illegible]	[illegible]	[illegible]
Y9Ð!☞[!/Y	[illegible]	!☐[Y	D/t	t[w	a ☒			ｵ	ð						ｦｵ	ｦｴ	ｦｨ	t[! bb95 h. {h[9{/9b/9	{99 [illegible]	[illegible]	[illegible]
Y9Ð!☞[!/Y	[illegible]	!☐[Y	D/t	t[w	a ☒	ミ	ｨ			ゑ	を	ﾉ	ﾆ		ｦｵ			t[! bb95 h. {h[9{/9b/9	{99 [illegible]	[illegible]	[illegible]
Y9Ð!☞[!/Y	[illegible]	!☐[Y	D/t	t[w	a ☒										ｦｵ			t[! bb95 h. {h[9{/9b/9	{99 [illegible]	[illegible]	[illegible]
Y9Ð!☞[!/Y	[illegible]	!☐[Y	D/t	t[w	a ☒			ｵ	ð	ゑ	を		ﾆ					t[! bb95 h. {h[9{/9b/9	{99 [illegible]	[illegible]	[illegible]
Y9Ð.☞[DI ¤ Dw! £	[illegible]	.[D	D/t	t[w	a ☒	ミ	ｨ	ｵ	ð				ﾆ			ｦｴ	ｦｨ	t[! bb95 h. {h[9{/9b/9	{99 [illegible]	[illegible]	[illegible]
Y9Ð.☞[DI ¤ Dw! £	[illegible]	.[D	D/t	t[w	a ☒	ミ	ｨ	ｵ	ð				ﾆ					t[! bb95 h. {h[9{/9b/9	{99 [illegible]	[illegible]	[illegible]
Y9Ð!☞[!/Y	[illegible]	!☐[Y	D/t	t[w	a ☒										ｦｵ	ｦｴ	ｦｨ	t[! bb95 h. {h[9{/9b/9	{99 [illegible]	[illegible]	[illegible]
Y9Ð.☞[DI ¤ Dw! £	[illegible]	.[D	D/t	t[w	a ☒							ﾉ	ﾆ				ｦｨ	t[! bb95 h. {h[9{/9b/9	{99 [illegible]	[illegible]	[illegible]
Y9Ð!☞[!/Y	[illegible]	!☐[Y	D/t	t[w	a ☒							ﾉ	ﾆ		ｦｵ	ｦｴ	ｦｨ	t[! bb95 h. {h[9{/9b/9	{99 [illegible]	[illegible]	[illegible]
Y9Ð!☞[!/Y	[illegible]	!☐[Y	D/t	t[w	a ☒		ｨ						ﾆ		ｦｵ	ｦｴ	ｦｨ	t[! bb95 h. {h[9{/9b/9	{99 [illegible]	[illegible]	[illegible]
Y9Ð!☞[!/Y	[illegible]	!☐[Y	D/t	t[w	a ☒		ｨ						ﾆ					t[! bb95 h. {h[9{/9b/9	{99 [illegible]	[illegible]	[illegible]
Y9Ð.☞[DI ¤ Dw! £	[illegible]	.[D	D/t	t[w	a ☒	ミ	ｨ	ｵ	ð				ﾆ			ｦｴ	ｦｨ	t[! bb95 h. {h[9{/9b/9	{99 [illegible]	[illegible]	[illegible]
Y9Ð.☞[DI ¤ Dw! £	[illegible]	.[D	D/t	t[w	a ☒	ミ	ｨ	ｵ	ð				ﾆ					t[! bb95 h. {h[9{/9b/9	{99 [illegible]	[illegible]	[illegible]
Y9Ð!☞[!/Y	[illegible]	!☐[Y	D/t	t[w	a ☒	ミ	ｨ				を				ｦｵ			t[! bb95 h. {h[9{/9b/9	{99 [illegible]	[illegible]	[illegible]
Y9Ð!☞[!/Y	[illegible]	!☐[Y	D/t	t[w	a ☒	ミ	ｨ	ｵ			を	ﾉ			ｦｵ	ｦｴ	ｦｨ	t[! bb95 h. {h[9{/9b/9	{99 [illegible]	[illegible]	[illegible]
Y9Ð!☞[!/Y	[illegible]	!☐[Y	D/t	t[w	a ☒		ｨ		ð		を		ﾆ					t[! bb95 h. {h[9{/9b/9	{99 [illegible]	[illegible]	[illegible]
Y9Ð!☞[!/Y	[illegible]	!☐[Y	D/t	t[w	a ☒		ｨ		ð		を							t[! bb95 h. {h[9{/9b/9	{99 [illegible]	[illegible]	[illegible]
Y9Ð!☞[!/Y	[illegible]	!☐[Y	D/t	t[w	a ☒			ｵ	ð		を		ﾆ					t[! bb95 h. {h[9{/9b/9	{99 [illegible]	[illegible]	[illegible]
Y9Ð!☞[!/Y	[illegible]	!☐[Y	D/t	t[w	a ☒				ð			ﾉ			ｦｵ	ｦｴ	ｦｨ	t[! bb95 h. {h[9{/9b/9	{99 [illegible]	[illegible]	[illegible]
Y9Ð/☞5!wY Dw! £	[illegible]	/5D	D/t	t[w	a ☒			ｵ	ð									t[! bb95 h. {h[9{/9b/9	{99 [illegible]	[illegible]	[illegible]
Y9Ð!☞[!/Y	[illegible]	!☐[Y	D/t	t[w	a ☒	ミ	ｨ	ｵ			を		ﾆ			ｦｴ	ｦｨ	t[! bb95 h. {h[9{/9b/9	{99 [illegible]	[illegible]	[illegible]
Y9Ð!☞[!/Y	[illegible]	!☐[Y	D/t	t[w	a ☒					ゑ	を	ﾉ	ﾆ		ｦｵ			t[! bb95 h. {h[9{/9b/9	{99 [illegible]	[illegible]	[illegible]
Y9Ð.☞[DI ¤ Dw! £	[illegible]	.[D	D/t	t[w	a ☒							ﾉ			ｦｵ	ｦｴ	ｦｨ	t[! bb95 h. {h[9{/9b/9	{99 [illegible]	[illegible]	[illegible]
Y9Ð!☞[!/Y	[illegible]	!☐[Y	D/t	t[w	a ☒		ｨ	ｵ		ゑ	を	ﾉ	ﾆ		ｦｵ	ｦｴ	ｦｨ	t[! bb95 h. {h[9{/9b/9	{99 [illegible]	[illegible]	[illegible]
Y9Ð!☞[!/Y	[illegible]	!☐[Y	D/t	t[w	a ☒					ゑ	を	ﾉ	ﾆ					t[! bb95 h. {h[9{/9b/9	{99 [illegible]	[illegible]	[illegible]
Y9Ð!☞[!/Y	[illegible]	!☐[Y	D/t	t[w	a ☒			ｵ	ð				ﾆ		ｦｵ	ｦｴ	ｦｨ	t[! bb95 h. {h[9{/9b/9	{99 [illegible]	[illegible]	[illegible]
Y9Ð!☞[!/Y	[illegible]	!☐[Y	D/t	t[w	a ☒	ミ	ｨ	ｵ	ð				ﾆ		ｦｵ	ｦｴ	ｦｨ	t[! bb95 h. {h[9{/9b/9	{99 [illegible]	[illegible]	[illegible]
Y9Ð!☞[!/Y	[illegible]	!☐[Y	D/t	t[w	a ☒	ミ		ｵ	ð			ﾉ	ﾆ				ｦｨ	t[! bb95 h. {h[9{/9b/9	{99 [illegible]	[illegible]	[illegible]
Y9Ð!☞[!/Y	[illegible]	!☐[Y	D/t	t[w	a ☒	ミ			ð			ﾉ	ﾆ				ｦｨ	t[! bb95 h. {h[9{/9b/9	{99 [illegible]	[illegible]	[illegible]
Y9Ð!☞[!/Y	[illegible]	!☐[Y	D/t	t[w	a ☒	ミ	ｨ		ð	ゑ	を					ｦｴ		t[! bb95 h. {h[9{/9b/9	{99 [illegible]	[illegible]	[illegible]
Y9Ð!☞[!/Y	[illegible]	!☐[Y	D/t	t[w	a ☒		ｨ		ð	ゑ	を	ﾉ					ｦｨ	t[! bb95 h. {h[9{/9b/9	{99 [illegible]	[illegible]	[illegible]
Y9Ð!☞[!/Y	[illegible]	!☐[Y	D/t	t[w	a ☒		ｨ				を						ｦｨ	t[! bb95 h. {h[9{/9b/9	{99 [illegible]	[illegible]	[illegible]
Y9Ð!☞[!/Y	[illegible]	!☐[Y	D/t	t[w	a ☒			ｵ				ﾉ	ﾆ					t[! bb95 h. {h[9{/9b/9	{99 [illegible]	[illegible]	[illegible]
Y9Ð!☞[!/Y	[illegible]	!☐[Y	D/t	t[w	a ☒	ミ						ﾉ	ﾆ				ｦｨ	t[! bb95 h. {h[9{/9b/9	{99 [illegible]	[illegible]	[illegible]
Y9Ð!☞[!/Y	[illegible]	!☐[Y	D/t	t[w	a ☒		ｨ			ゑ	を	ﾉ	ﾆ			ｦｴ		t[! bb95 h. {h[9{/9b/9	{99 [illegible]	[illegible]	[illegible]
Y9Ð!☞[!/Y	[illegible]	!☐[Y	D/t	t[w	a ☒		ｨ	ｵ		ゑ	を	ﾉ	ﾆ			ｦｴ		t[! bb95 h. {h[9{/9b/9	{99 [illegible]	[illegible]	[illegible]
Y9Ð!☞[!/Y	[illegible]	!☐[Y	D/t	t[w	a ☒	ミ	ｨ		ð	ゑ	を	ﾉ				ｦｴ	ｦｨ	t[! bb95 h. {h[9{/9b/9	{99 [illegible]	[illegible]	[illegible]
Y9Ð!☞[!/Y	[illegible]	!☐[Y	D/t	t[w	a ☒	ミ	ｨ		ð	ゑ	を	ﾉ	ﾆ		ｦｵ	ｦｴ	ｦｨ	t[! bb95 h. {h[9{/9b/9	{99 [illegible]	[illegible]	[illegible]
Y9Ð!☞[!/Y	[illegible]	!☐[Y	D/t	t[w	a ☒	ミ	ｨ	ｵ	ð	ゑ	を	ﾉ				ｦｴ	ｦｨ	t[! bb95 h. {h[9{/9b/9	{99 [illegible]	[illegible]	[illegible]
Y9Ð!☞[!/Y	[illegible]	!☐[Y	D/t	t[w	a ☒												ｦｨ	t[! bb95 h. {h[9{/9b/9	{99 [illegible]	[illegible]	[illegible]
Y9Ð!☞[!/Y	[illegible]	!☐[Y	D/t	t[w	a ☒		ｨ	ｵ	ð									t[! bb95 h. {h[9{/9b/9	{99 [illegible]	[illegible]	[illegible]

molex

a /E⁵ƺ [! 5 9 { 9! [9 5 ! { {Ða ! ¤ { 9! [
. ha ! b5 t Lb h- ¤ {I 99¤

! {{9a . [Ð5 9{/ wLt ¤Lhb	! {{9a . [Ðt! w¤ b- a . 9w	I h- {LbD Y9Ð/L h[hw	Dwha a 9¤ /! t	t[w	a ! ¤ { 9! [	ろ	ゎ	わ	ゐ	ゑ	を	ん	ゔ	˚	[illegible]	[illegible]	[illegible]	{¤! ¤- {	/ha a 9b¤{	. ! /Y{I 9[[° L¤I wL {	. ! /Y{I 9[[° L¤I h- ¤ wL {
Y9Ð! ¤[! /Y	[illegible]	! ⊡[Y	D/t	t[w	a ⊠				[illegible]	[illegible]			[illegible]		[illegible]	[illegible]	[illegible]	t[! bb95 h. {h[9(/9b/9	{99 [illegible]	[illegible]	[illegible]
Y9Ð! ¤[! /Y	[illegible]	! ⊡[Y	D/t	t[w	a ⊠	[illegible]												t[! bb95 h. {h[9(/9b/9	{99 [illegible]	[illegible]	[illegible]
Y9Ð! ¤[! /Y	[illegible]	! ⊡[Y	D/t	t[w	a ⊠							[illegible]	[illegible]				[illegible]	t[! bb95 h. {h[9(/9b/9	{99 [illegible]	[illegible]	[illegible]
Y9Ð/¤5! w\ DwL £	[illegible]	/ ⊡D	D/t	t[w	a ⊠			[illegible]	[illegible]				[illegible]					t[! bb95 h. {h[9(/9b/9	{99 [illegible]	[illegible]	[illegible]
Y9Ð! ¤[! /Y	[illegible]	! ⊡[Y	D/t	t[w	a ⊠	[illegible]	[illegible]					[illegible]	[illegible]		[illegible]	[illegible]	[illegible]	t[! bb95 h. {h[9(/9b/9	{99 [illegible]	[illegible]	[illegible]
Y9Ð! ¤[! /Y	[illegible]	! ⊡[Y	D/t	t[w	a ⊠					[illegible]		[illegible]	[illegible]			[illegible]		t[! bb95 h. {h[9(/9b/9	{99 [illegible]	[illegible]	[illegible]
Y9Ð! ¤[! /Y	[illegible]	! ⊡[Y	D/t	t[w	a ⊠	[illegible]	[illegible]			[illegible]					[illegible]		[illegible]	t[! bb95 h. {h[9(/9b/9	{99 [illegible]	[illegible]	[illegible]
Y9Ð! ¤[! /Y	[illegible]	! ⊡[Y	D/t	t[w	a ⊠					[illegible]								t[! bb95 h. {h[9(/9b/9	{99 [illegible]	[illegible]	[illegible]
Y9Ð! ¤[! /Y	[illegible]	! ⊡[Y	D/t	t[w	a ⊠			[illegible]	[illegible]	[illegible]								t[! bb95 h. {h[9(/9b/9	{99 [illegible]	[illegible]	[illegible]
Y9Ð! ¤[! /Y	[illegible]	! ⊡[Y	D/t	t[w	a ⊠	[illegible]	[illegible]			[illegible]					[illegible]	[illegible]	[illegible]	t[! bb95 h. {h[9(/9b/9	{99 [illegible]	[illegible]	[illegible]
Y9Ð! ¤[! /Y	[illegible]	! ⊡[Y	D/t	t[w	a ⊠					[illegible]						[illegible]		t[! bb95 h. {h[9(/9b/9	{99 [illegible]	[illegible]	[illegible]
Y9Ð! ¤[! /Y	[illegible]	! ⊡[Y	D/t	t[w	a ⊠	[illegible]							[illegible]			[illegible]		t[! bb95 h. {h[9(/9b/9	{99 [illegible]	[illegible]	[illegible]
Y9Ð! ¤[! /Y	[illegible]	! ⊡[Y	D/t	t[w	a ⊠	[illegible]			[illegible]	[illegible]	[illegible]	[illegible]						t[! bb95 h. {h[9(/9b/9	{99 [illegible]	[illegible]	[illegible]
Y9Ð! ¤[! /Y	[illegible]	! ⊡[Y	D/t	t[w	a ⊠	[illegible]			[illegible]	[illegible]	[illegible]	[illegible]	[illegible]			[illegible]		t[! bb95 h. {h[9(/9b/9	{99 [illegible]	[illegible]	[illegible]
Y9Ð! ¤[! /Y	[illegible]	! ⊡[Y	D/t	t[w	a ⊠	[illegible]	[illegible]	[illegible]	[illegible]	[illegible]	[illegible]	[illegible]	[illegible]			[illegible]		t[! bb95 h. {h[9(/9b/9	{99 [illegible]	[illegible]	[illegible]
Y9Ð. ¤[DI ¤ DwL £	[illegible]	. ⊡D	D/t	t[w	a ⊠	[illegible]					[illegible]	[illegible]			[illegible]	[illegible]	[illegible]	t[! bb95 h. {h[9(/9b/9	{99 [illegible]	[illegible]	[illegible]
Y9Ð. ¤[DI ¤ DwL £	[illegible]	. ⊡D	D/t	t[w	a ⊠	[illegible]					[illegible]	[illegible]	[illegible]		[illegible]	[illegible]	[illegible]	t[! bb95 h. {h[9(/9b/9	{99 [illegible]	[illegible]	[illegible]
Y9Ð. ¤[DI ¤ DwL £	[illegible]	. ⊡D	D/t	t[w	a ⊠	[illegible]				[illegible]	[illegible]	[illegible]	[illegible]		[illegible]	[illegible]	[illegible]	t[! bb95 h. {h[9(/9b/9	{99 [illegible]	[illegible]	[illegible]
Y9Ð! ¤[! /Y	[illegible]	! ⊡[Y	D/t	t[w	a ⊠	[illegible]	[illegible]			[illegible]		[illegible]	[illegible]		[illegible]	[illegible]	[illegible]	t[! bb95 h. {h[9(/9b/9	{99 [illegible]	[illegible]	[illegible]
Y9Ð! ¤[! /Y	[illegible]	! ⊡[Y	D/t	t[w	a ⊠							[illegible]				[illegible]	[illegible]	t[! bb95 h. {h[9(/9b/9	{99 [illegible]	[illegible]	[illegible]
Y9Ð! ¤[! /Y	[illegible]	! ⊡[Y	D/t	t[w	a ⊠	[illegible]	[illegible]	[illegible]	[illegible]	[illegible]	[illegible]	[illegible]	[illegible]			[illegible]	[illegible]	t[! bb95 h. {h[9(/9b/9	{99 [illegible]	[illegible]	[illegible]
Y9Ð! ¤[! /Y	[illegible]	! ⊡[Y	D/t	t[w	a ⊠			[illegible]				[illegible]	[illegible]			[illegible]	[illegible]	t[! bb95 h. {h[9(/9b/9	{99 [illegible]	[illegible]	[illegible]
Y9Ð! ¤[! /Y	[illegible]	! ⊡[Y	D/t	t[w	a ⊠	[illegible]	[illegible]	[illegible]	[illegible]							[illegible]	[illegible]	t[! bb95 h. {h[9(/9b/9	{99 [illegible]	[illegible]	[illegible]
Y9Ð! ¤[! /Y	[illegible]	! ⊡[Y	D/t	t[w	a ⊠	[illegible]		[illegible]		[illegible]		[illegible]						t[! bb95 h. {h[9(/9b/9	{99 [illegible]	[illegible]	[illegible]
Y9Ð! ¤[! /Y	[illegible]	! ⊡[Y	D/t	t[w	a ⊠		[illegible]				[illegible]	[illegible]	[illegible]					t[! bb95 h. {h[9(/9b/9	{99 [illegible]	[illegible]	[illegible]
Y9Ð! ¤[! /Y	[illegible]	! ⊡[Y	D/t	t[w	a ⊠					[illegible]		[illegible]			[illegible]	[illegible]	[illegible]	t[! bb95 h. {h[9(/9b/9	{99 [illegible]	[illegible]	[illegible]
Y9Ð! ¤[! /Y	[illegible]	! ⊡[Y	D/t	t[w	a ⊠					[illegible]					[illegible]	[illegible]		t[! bb95 h. {h[9(/9b/9	{99 [illegible]	[illegible]	[illegible]
Y9Ð! ¤[! /Y	[illegible]	! ⊡[Y	D/t	t[w	a ⊠	[illegible]	[illegible]	[illegible]	[illegible]	[illegible]	[illegible]		[illegible]		[illegible]	[illegible]		t[! bb95 h. {h[9(/9b/9	{99 [illegible]	[illegible]	[illegible]
Y9Ð! ¤[! /Y	[illegible]	! ⊡[Y	D/t	t[w	a ⊠	[illegible]	[illegible]	[illegible]	[illegible]		[illegible]	[illegible]	[illegible]				[illegible]	t[! bb95 h. {h[9(/9b/9	{99 [illegible]	[illegible]	[illegible]
Y9Ð! ¤[! /Y	[illegible]	! ⊡[Y	D/t	t[w	a ⊠							[illegible]					[illegible]	t[! bb95 h. {h[9(/9b/9	{99 [illegible]	[illegible]	[illegible]
Y9Ð! ¤[! /Y	[illegible]	! ⊡[Y	D/t	t[w	a ⊠	[illegible]	[illegible]		[illegible]	[illegible]	[illegible]	[illegible]	[illegible]				[illegible]	t[! bb95 h. {h[9(/9b/9	{99 [illegible]	[illegible]	[illegible]
Y9Ð! ¤[! /Y	[illegible]	! ⊡[Y	D/t	t[w	a ⊠			[illegible]							[illegible]	[illegible]		t[! bb95 h. {h[9(/9b/9	{99 [illegible]	[illegible]	[illegible]
Y9Ð! ¤[! /Y	[illegible]	! ⊡[Y	D/t	t[w	a ⊠		[illegible]			[illegible]		[illegible]			[illegible]			t[! bb95 h. {h[9(/9b/9	{99 [illegible]	[illegible]	[illegible]
Y9Ð! ¤[! /Y	[illegible]	! ⊡[Y	D/t	t[w	a ⊠				[illegible]			[illegible]						t[! bb95 h. {h[9(/9b/9	{99 [illegible]	[illegible]	[illegible]
Y9Ð! ¤[! /Y	[illegible]	! ⊡[Y	D/t	t[w	a ⊠				[illegible]		[illegible]	[illegible]						t[! bb95 h. {h[9(/9b/9	{99 [illegible]	[illegible]	[illegible]
Y9Ð! ¤[! /Y	[illegible]	! ⊡[Y	D/t	t[w	a ⊠						[illegible]	[illegible]	[illegible]					t[! bb95 h. {h[9(/9b/9	{99 [illegible]	[illegible]	[illegible]
Y9Ð! ¤[! /Y	[illegible]	! ⊡[Y	D/t	t[w	a ⊠		[illegible]	[illegible]	[illegible]	[illegible]	[illegible]		[illegible]		[illegible]	[illegible]	[illegible]	t[! bb95 h. {h[9(/9b/9	{99 [illegible]	[illegible]	[illegible]
Y9Ð. ¤[DI ¤ DwL £	[illegible]	I ⊡D	D/t	t[w	a ⊠					[illegible]			[illegible]		[illegible]	[illegible]	[illegible]	t[! bb95 h. {h[9(/9b/9	{99 [illegible]	[illegible]	[illegible]
Y9Ð! ¤[! /Y	[illegible]	! ⊡[Y	D/t	t[w	a ⊠								[illegible]				[illegible]	t[! bb95 h. {h[9(/9b/9	{99 [illegible]	[illegible]	[illegible]
Y9Ð! ¤[! /Y	[illegible]	! ⊡[Y	D/t	t[w	a ⊠	[illegible]	[illegible]		[illegible]	[illegible]	[illegible]		[illegible]					t[! bb95 h. {h[9(/9b/9	{99 [illegible]	[illegible]	[illegible]
Y9Ð! ¤[! /Y	[illegible]	! ⊡[Y	D/t	t[w	a ⊡													{! [9! . [9		[illegible]	[illegible]
Y9Ð. ¤[DI ¤ DwL £	[illegible]	. ⊡D	D/t	t[w	a ⊡													{! [9! . [9		[illegible]	[illegible]
Y9Ð/ ¤wh° b	[illegible]	/ ⊡w	D/t	t[w	a ⊡													bh¤w9/ha a 9b595	{99 [illegible]	[illegible]	[illegible]
Y9Ð5 ¤Dw9b	[illegible]	5 ⊡w	D/t	t[w	a ⊡													bh¤w9/ha a 9b595	{99 [illegible]	[illegible]	[illegible]
¹ h5 Y9£	[illegible]																				
Y9Ð! ¤[! /Y	[illegible]	! ⊡[Y	D/t	t[w	a ⊡						[illegible]							{! [9! . [9		[illegible]	[illegible]
Y9Ð. ¤[DI ¤ DwL £	[illegible]	. ⊡D	D/t	t[w	a ⊡						[illegible]							{! [9! . [9		[illegible]	[illegible]
Y9Ð/ ¤wh° b	[illegible]	/ ⊡w	D/t	t[w	a ⊡						[illegible]							bh¤w9/ha a 9b595		[illegible]	[illegible]
Y9Ð5 ¤Dw9b	[illegible]	5 ⊡w	D/t	t[w	a ⊡						[illegible]							bh¤w9/ha a 9b595		[illegible]	[illegible]
¹ h5 Y9£	[illegible]																				
Y9Ð! ¤[! /Y	[illegible]	! ⊡[Y	D/t	t[w	a ⊡						[illegible]	[illegible]						{! [9! . [9		[illegible]	[illegible]
Y9Ð. ¤[DI ¤ DwL £	[illegible]	. ⊡D	D/t	t[w	a ⊡						[illegible]	[illegible]						{! [9! . [9		[illegible]	[illegible]
Y9Ð/ ¤wh° b	[illegible]	/ ⊡w	D/t	t[w	a ⊡						[illegible]	[illegible]						bh¤w9/ha a 9b595		[illegible]	[illegible]
Y9Ð5 ¤Dw9b	[illegible]	5 ⊡w	D/t	t[w	a ⊡						[illegible]	[illegible]						bh¤w9/ha a 9b595		[illegible]	[illegible]
¹ h5 Y9£	[illegible]																				
Y9Ð! ¤[! /Y	[illegible]	! ⊡[Y	D/t	t[w	a ⊡	[illegible]					[illegible]	[illegible]						{! [9! . [9		[illegible]	[illegible]
Y9Ð. ¤[DI ¤ DwL £	[illegible]	. ⊡D	D/t	t[w	a ⊡	[illegible]					[illegible]	[illegible]						{! [9! . [9		[illegible]	[illegible]
Y9Ð/ ¤wh° b	[illegible]	/ ⊡w	D/t	t[w	a ⊡	[illegible]					[illegible]	[illegible]						bh¤w9/ha a 9b595	{99 [illegible]	[illegible]	[illegible]
Y9Ð5 ¤Dw9b	[illegible]	5 ⊡w	D/t	t[w	a ⊡	[illegible]					[illegible]	[illegible]						bh¤w9/ha a 9b595	{99 [illegible]	[illegible]	[illegible]
¹ h5 Y9£	[illegible]																				
Y9Ð! ¤[! /Y	[illegible]	! ⊡[Y	D/t	t[w	a ⊡	[illegible]					[illegible]	[illegible]					[illegible]	{! [9! . [9		[illegible]	[illegible]
Y9Ð. ¤[DI ¤ DwL £	[illegible]	. ⊡D	D/t	t[w	a ⊡	[illegible]					[illegible]	[illegible]					[illegible]	{! [9! . [9		[illegible]	[illegible]
Y9Ð/ ¤wh° b	[illegible]	/ ⊡w	D/t	t[w	a ⊡	[illegible]					[illegible]	[illegible]					[illegible]	bh¤w9/ha a 9b595		[illegible]	[illegible]
Y9Ð5 ¤Dw9b	[illegible]	5 ⊡w	D/t	t[w	a ⊡	[illegible]					[illegible]	[illegible]					[illegible]	bh¤w9/ha a 9b595		[illegible]	[illegible]
¹ h5 Y9£	[illegible]																				
Y9Ð! ¤[! /Y	[illegible]	! ⊡[Y	D/t	t[w	a ⊡						[illegible]						[illegible]	{! [9! . [9		[illegible]	[illegible]
Y9Ð! ¤[! /Y	[illegible]	! ⊡[Y	D/t	t[w	a ⊡	[illegible]	[illegible]	[illegible]	[illegible]	[illegible]	[illegible]	[illegible]	[illegible]		[illegible]	[illegible]	[illegible]	{! [9! . [9		[illegible]	[illegible]
Y9Ð. ¤[DI ¤ DwL £	[illegible]	. ⊡D	D/t	t[w	a ⊡	[illegible]	[illegible]	[illegible]	[illegible]	[illegible]	[illegible]	[illegible]	[illegible]		[illegible]	[illegible]	[illegible]	{! [9! . [9		[illegible]	[illegible]
Y9Ð/ ¤wh° b	[illegible]	/ ⊡w	D/t	t[w	a ⊡	[illegible]	[illegible]	[illegible]	[illegible]	[illegible]	[illegible]	[illegible]	[illegible]		[illegible]	[illegible]	[illegible]	bh¤w9/ha a 9b595	{99 [illegible]	[illegible]	[illegible]
Y9Ð5 ¤Dw9b	[illegible]	5 ⊡w	D/t	t[w	a ⊡	[illegible]	[illegible]	[illegible]	[illegible]	[illegible]	[illegible]	[illegible]	[illegible]		[illegible]	[illegible]	[illegible]	bh¤w9/ha a 9b595	{99 [illegible]	[illegible]	[illegible]
¹ h5 Y9£	[illegible]																				
Y9Ð! ¤[! /Y	[illegible]	! ⊡[Y	D/t	t[w	a ⊡		[illegible]	[illegible]					[illegible]			[illegible]		{! [9! . [9		[illegible]	[illegible]
Y9Ð! ¤[! /Y	[illegible]	! ⊡[Y	D/t	t[w	a ⊡		[illegible]	[illegible]		[illegible]	[illegible]	[illegible]	[illegible]			[illegible]		{! [9! . [9		[illegible]	[illegible]

a ΛΞろれゎΞを [!59{9![95!{{Ða!¤{9![
.ha !b5 tLb h-¤{I 99¤

!{{9a.[Ð59{/wLt¤Lhb	!{{9a.[Ðt!w¤ b-a.9w	/ha thb9b¤				.[h/Y95 ¤9wa Lb![{												{¤!¤-{	/ha a 9b¤{	ht¤Lhb![!¤¤!¤/I a 9b¤{ {h[5 {9t9w! ¤9[Ð	
		¤I 9tw9{9b/9hC! b!..w9¹L! ¤Lhb Lb5L/!¤9{ ¤I 9 tw9{9b/9hC¤I !¤/ha thb9b¤				/!¹L¤Ð° L¤I ! b-a.9wLb5L/!¤9{.[h/Y95 ¤9wa Lb![th{L¤Lhb /!¹L¤Ð° L¤I h-¤! b-a.9wLb5L/!¤9{ ht9b ¤9wa Lb![th{L¤Lhb															
		I h-{LbD Y9Ð/h[hw	Dwha a 9¤ /!t	t[w	a!¤{9![	ろ	ゎ	わ	ゐ	ゑ	を	ん	ゔ	゛	3れ	33	3ゎ			.!/Y{I 9[[° L¤I wL{	.!/Y{I 9[[° L¤I h-¤ wL{
Y9Ð!¤[!/Y	[illegible]	! ⊡[Y	D/t	t[w	a ⊡						ﾁ	ｱ						{![9!.[9		わゐ ゑれろゎゑ	わゐ ゑれろゎわ
Y9Ð!¤[!/Y	[illegible]	! ⊡[Y	D/t	t[w	a ⊡		ｨ	ｷ			ﾁ	ｱ	ﾐ		ｵ	ｺ		{![9!.[9		わゐ ゑれろゎゑ	わゐ ゑれろゎわ
Y9Ð.¤[LDI¤DwL£	[illegible]	. ⊡D	D/t	t[w	a ⊡	ﾆ				ｽ	ﾁ	ｱ	ﾐ		ｵ			{![9!.[9		わゐ ゑれろゎゑ	わゐ ゑれろゎわ
Y9Ð!¤[!/Y	[illegible]	! ⊡[Y	D/t	t[w	a ⊡		ｨ											{![9!.[9		わゐ ゑれろゎゑ	わゐ ゑれろゎわ
Y9Ð.¤[LDI¤DwL£	[illegible]	. ⊡D	D/t	t[w	a ⊡		ｨ								ｵ			{![9!.[9		わゐ ゑれろゎゑ	わゐ ゑれろゎわ
Y9Ð!¤[!/Y	[illegible]	! ⊡[Y	D/t	t[w	a ⊡	ﾆ				ｽ	ﾁ	ｱ	ﾐ					{![9!.[9		わゐ ゑれろゎゑ	わゐ ゑれろゎわ
Y9Ð!¤[!/Y	[illegible]	! ⊡[Y	D/t	t[w	a ⊡		ｨ	ｷ					ﾐ		ｵ	ｺ		{![9!.[9		わゐ ゑれろゎゑ	わゐ ゑれろゎわ
Y9Ð!¤[!/Y	[illegible]	! ⊡[Y	D/t	t[w	a ⊡							ｱ	ﾐ		ｵ	ｺ		{![9!.[9		わゐ ゑれろゎゑ	わゐ ゑれろゎわ
Y9Ð!¤[!/Y	[illegible]	! ⊡[Y	D/t	t[w	a ⊡							ｱ	ﾐ					{![9!.[9		わゐ ゑれろゎゑ	わゐ ゑれろゎわ
Y9Ð!¤[!/Y	[illegible]	! ⊡[Y	D/t	t[w	a ⊡		ｨ								ｵ			{![9!.[9		わゐ ゑれろゎゑ	わゐ ゑれろゎわ
Y9Ð!¤[!/Y	[illegible]	! ⊡[Y	D/t	t[w	a ⊡		ｨ		ﾃ									{![9!.[9		わゐ ゑれろゎゑ	わゐ ゑれろゎわ
Y9Ð!¤[!/Y	[illegible]	! ⊡[Y	D/t	t[w	a ⊡										ｵ	ｺ	ｶ	{![9!.[9		わゐ ゑれろゎゑ	わゐ ゑれろゎわ
Y9Ð!¤[!/Y	[illegible]	! ⊡[Y	D/t	t[w	a ⊡											ｺ		{![9!.[9		わゐ ゑれろゎゑ	わゐ ゑれろゎわ
Y9Ð!¤[!/Y	[illegible]	! ⊡[Y	D/t	t[w	a ⊡		ｨ	ｷ	ﾃ			ｱ	ﾐ					{![9!.[9		わゐ ゑれろゎゑ	わゐ ゑれろゎわ
Y9Ð!¤[!/Y	[illegible]	! ⊡[Y	D/t	t[w	a ⊡	ﾆ		ｷ	ﾃ	ｽ	ﾁ	ｱ	ﾐ					{![9!.[9		わゐ ゑれろゎゑ	わゐ ゑれろゎわ
Y9Ð!¤[!/Y	[illegible]	! ⊡[Y	D/t	t[w	a ⊡										ｵ	ｺ	ｶ	{![9!.[9		わゐ ゑれろゎゑ	わゐ ゑれろゎわ
Y9Ð!¤[!/Y	[illegible]	! ⊡[Y	D/t	t[w	a ⊡				ﾃ	ｽ	ﾁ	ｱ	ﾐ					{![9!.[9		わゐ ゑれろゎゑ	わゐ ゑれろゎわ
Y9Ð!¤[!/Y	[illegible]	! ⊡[Y	D/t	t[w	a ⊡		ｨ		ﾃ	ｽ			ﾐ		ｵ	ｺ		{![9!.[9		わゐ ゑれろゎゑ	わゐ ゑれろゎわ
Y9Ð!¤[!/Y	[illegible]	! ⊡[Y	D/t	t[w	a ⊡							ｱ						{![9!.[9		わゐ ゑれろゎゑ	わゐ ゑれろゎわ
Y9Ð!¤[!/Y	[illegible]	! ⊡[Y	D/t	t[w	a ⊡		ｨ	ｷ	ﾃ	ｽ	ﾁ	ｱ	ﾐ		ｵ	ｺ	ｶ	{![9!.[9		わゐ ゑれろゎゑ	わゐ ゑれろゎわ
Y9Ð!¤[!/Y	[illegible]	! ⊡[Y	D/t	t[w	a ⊡		ｨ	ｷ	ﾃ	ｽ					ｵ	ｺ	ｶ	{![9!.[9		わゐ ゑれろゎゑ	わゐ ゑれろゎわ
Y9Ð!¤[!/Y	[illegible]	! ⊡[Y	D/t	t[w	a ⊡		ｨ	ｷ	ﾃ	ｽ	ﾁ	ｱ			ｵ	ｺ	ｶ	{![9!.[9		わゐ ゑれろゎゑ	わゐ ゑれろゎわ
Y9Ð!¤[!/Y	[illegible]	! ⊡[Y	D/t	t[w	a ⊡	ﾆ					ﾁ	ｱ						{![9!.[9		わゐ ゑれろゎゑ	わゐ ゑれろゎわ
Y9Ð!¤[!/Y	[illegible]	! ⊡[Y	D/t	t[w	a ⊡										ｵ		ｶ	{![9!.[9		わゐ ゑれろゎゑ	わゐ ゑれろゎわ
Y9Ð!¤[!/Y	[illegible]	! ⊡[Y	D/t	t[w	a ⊡		ｨ	ｷ								ｺ		{![9!.[9		わゐ ゑれろゎゑ	わゐ ゑれろゎわ
Y9Ð!¤[!/Y	[illegible]	! ⊡[Y	D/t	t[w	a ⊡	ﾆ	ｨ	ｷ	ﾃ	ｽ					ｵ	ｺ	ｶ	{![9!.[9		わゐ ゑれろゎゑ	わゐ ゑれろゎわ
Y9Ð!¤[!/Y	[illegible]	! ⊡[Y	D/t	t[w	a ⊡											ｺ	ｶ	{![9!.[9		わゐ ゑれろゎゑ	わゐ ゑれろゎわ
Y9Ð/¤5!wYDwL£	[illegible]	/ ⊡D	D/t	t[w	a ⊡													{![9!.[9		わゐ ゑれろゎゑ	わゐ ゑれろゎわ
Y9Ð5¤(¤hb9DwL£	[illegible]	5 ⊡D	D/t	t[w	a ⊡													{![9!.[9		わゐ ゑれろゎゑ	わゐ ゑれろゎわ
Y9Ð/¤5!wYDwL£	[illegible]	/ ⊡D	D/t	t[w	a ⊡	ﾆ	ｨ	ｷ	ﾃ	ｽ	ﾁ	ｱ	ﾐ		ｵ	ｺ	ｶ	{![9!.[9		わゐ ゑれろゎゑ	わゐ ゑれろゎわ
Y9Ð5¤(¤hb9DwL£	[illegible]	5 ⊡D	D/t	t[w	a ⊡	ﾆ	ｨ	ｷ	ﾃ	ｽ	ﾁ	ｱ	ﾐ		ｵ	ｺ	ｶ	{![9!.[9		わゐ ゑれろゎゑ	わゐ ゑれろゎわ
Y9Ð!¤[!/Y	[illegible]	! ⊡[Y	D/t	t[w	a ⊡						ﾁ	ｱ	ﾐ		ｵ	ｺ		{![9!.[9		わゐ ゑれろゎゑ	わゐ ゑれろゎわ
Y9Ð!¤[!/Y	[illegible]	! ⊡[Y	D/t	t[w	a ⊡	ﾆ	ｨ	ｷ	ﾃ	ｽ	ﾁ	ｱ					ｶ	{![9!.[9		わゐ ゑれろゎゑ	わゐ ゑれろゎわ
Y9Ð!¤[!/Y	[illegible]	! ⊡[Y	D/t	t[w	a ⊡			ｷ	ﾃ	ｽ	ﾁ	ｱ						{![9!.[9		わゐ ゑれろゎゑ	わゐ ゑれろゎわ
Y9Ð!¤[!/Y	[illegible]	! ⊡[Y	D/t	t[w	a ⊡			ｷ	ﾃ	ｽ	ﾁ	ｱ	ﾐ		ｵ	ｺ		{![9!.[9		わゐ ゑれろゎゑ	わゐ ゑれろゎわ
Y9Ð!¤[!/Y	[illegible]	! ⊡[Y	D/t	t[w	a ⊡	ﾆ	ｨ	ｷ	ﾃ	ｽ			ﾐ		ｵ	ｺ	ｶ	{![9!.[9		わゐ ゑれろゎゑ	わゐ ゑれろゎわ
Y9Ð!¤[!/Y	[illegible]	! ⊡[Y	D/t	t[w	a ⊡		ｨ		ﾃ			ｱ	ﾐ		ｵ			{![9!.[9		わゐ ゑれろゎゑ	わゐ ゑれろゎわ
Y9Ð!¤[!/Y	[illegible]	! ⊡[Y	D/t	t[w	a ⊡		ｨ					ｱ	ﾐ					{![9!.[9		わゐ ゑれろゎゑ	わゐ ゑれろゎわ
Y9Ð!¤[!/Y	[illegible]	! ⊡[Y	D/t	t[w	a ⊡		ｨ					ｱ	ﾐ		ｵ			{![9!.[9		わゐ ゑれろゎゑ	わゐ ゑれろゎわ
Y9Ð!¤[!/Y	[illegible]	! ⊡[Y	D/t	t[w	a ⊡								ﾐ					{![9!.[9		わゐ ゑれろゎゑ	わゐ ゑれろゎわ
Y9Ð!¤[!/Y	[illegible]	! ⊡[Y	D/t	t[w	a ⊡	ﾆ		ｷ	ﾃ	ｽ	ﾁ		ﾐ		ｵ	ｺ	ｶ	{![9!.[9		わゐ ゑれろゎゑ	わゐ ゑれろゎわ
Y9Ð!¤[!/Y	[illegible]	! ⊡[Y	D/t	t[w	a ⊡				ﾃ				ﾐ		ｵ			{![9!.[9		わゐ ゑれろゎゑ	わゐ ゑれろゎわ
Y9Ð!¤[!/Y	[illegible]	! ⊡[Y	D/t	t[w	a ⊡	ﾆ	ｨ	ｷ	ﾃ		ﾁ		ﾐ		ｵ	ｺ	ｶ	{![9!.[9		わゐ ゑれろゎゑ	わゐ ゑれろゎわ
Y9Ð!¤[!/Y	[illegible]	! ⊡[Y	D/t	t[w	a ⊡	ﾆ	ｨ	ｷ								ｺ	ｶ	{![9!.[9		わゐ ゑれろゎゑ	わゐ ゑれろゎわ
Y9Ð!¤[!/Y	[illegible]	! ⊡[Y	D/t	t[w	a ⊡						ﾁ						ｶ	{![9!.[9		わゐ ゑれろゎゑ	わゐ ゑれろゎわ
Y9Ð!¤[!/Y	[illegible]	! ⊡[Y	D/t	t[w	a ⊡	ﾆ	ｨ	ｷ	ﾃ	ｽ		ｱ	ﾐ		ｵ	ｺ		{![9!.[9		わゐ ゑれろゎゑ	わゐ ゑれろゎわ
Y9Ð!¤[!/Y	[illegible]	! ⊡[Y	D/t	t[w	a ⊡	ﾆ	ｨ	ｷ	ﾃ	ｽ	ﾁ							{![9!.[9		わゐ ゑれろゎゑ	わゐ ゑれろゎわ
Y9Ð!¤[!/Y	[illegible]	! ⊡[Y	D/t	t[w	a ⊡		ｨ		ﾃ		ﾁ		ﾐ		ｵ	ｺ		{![9!.[9		わゐ ゑれろゎゑ	わゐ ゑれろゎわ
Y9Ð!¤[!/Y	[illegible]	! ⊡[Y	D/t	t[w	a ⊡	ﾆ	ｨ	ｷ	ﾃ	ｽ	ﾁ				ｵ	ｺ	ｶ	{![9!.[9		わゐ ゑれろゎゑ	わゐ ゑれろゎわ
Y9Ð!¤[!/Y	[illegible]	! ⊡[Y	D/t	t[w	a ⊡						ﾁ				ｵ	ｺ	ｶ	{![9!.[9		わゐ ゑれろゎゑ	わゐ ゑれろゎわ
Y9Ð!¤[!/Y	[illegible]	! ⊡[Y	D/t	t[w	a ⊡	ﾆ		ｷ	ﾃ	ｽ	ﾁ	ｱ	ﾐ		ｵ	ｺ	ｶ	{![9!.[9		わゐ ゑれろゎゑ	わゐ ゑれろゎわ
Y9Ð5¤(¤hb9DwL£	[illegible]	5 ⊡D	D/t	t[w	a ⊡	ﾆ					ﾁ	ｱ						{![9!.[9		わゐ ゑれろゎゑ	わゐ ゑれろゎわ
Y9Ð!¤[!/Y	[illegible]	! ⊡[Y	D/t	t[w	a ⊡		ｨ	ｷ					ﾐ					{![9!.[9		わゐ ゑれろゎゑ	わゐ ゑれろゎわ
Y9Ð!¤[!/Y	[illegible]	! ⊡[Y	D/t	t[w	a ⊡	ﾆ						ｱ						{![9!.[9		わゐ ゑれろゎゑ	わゐ ゑれろゎわ
Y9Ð!¤[!/Y	[illegible]	! ⊡[Y	D/t	t[w	a ⊡	ﾆ					ﾁ							{![9!.[9		わゐ ゑれろゎゑ	わゐ ゑれろゎわ
Y9Ð!¤[!/Y	[illegible]	! ⊡[Y	D/t	t[w	a ⊡	ﾆ	ｨ	ｷ	ﾃ		ﾁ		ﾐ					{![9!.[9		わゐ ゑれろゎゑ	わゐ ゑれろゎわ
Y9Ð!¤[!/Y	[illegible]	! ⊡[Y	D/t	t[w	a ⊡	ﾆ						ｱ					ｶ	{![9!.[9		わゐ ゑれろゎゑ	わゐ ゑれろゎわ
Y9Ð!¤[!/Y	[illegible]	! ⊡[Y	D/t	t[w	a ⊡	ﾆ	ｨ	ｷ	ﾃ	ｽ	ﾁ	ｱ	ﾐ				ｶ	{![9!.[9		わゐ ゑれろゎゑ	わゐ ゑれろゎわ
Y9Ð!¤[!/Y	[illegible]	! ⊡[Y	D/t	t[w	a ⊡													{![9!.[9		わゐ ゑれろゎゑ	わゐ ゑれろゎわ
Y9Ð!¤[!/Y	[illegible]	! ⊡[Y	D/t	t[w	a ⊡			ｷ	ﾃ						ｵ	ｺ	ｶ	{![9!.[9		わゐ ゑれろゎゑ	わゐ ゑれろゎわ
Y9Ð!¤[!/Y	[illegible]	! ⊡[Y	D/t	t[w	a ⊡	ﾆ	ｨ			ｽ	ﾁ	ｱ	ﾐ					{![9!.[9		わゐ ゑれろゎゑ	わゐ ゑれろゎわ
Y9Ð!¤[!/Y	[illegible]	! ⊡[Y	D/t	t[w	a ⊡	ﾆ	ｨ			ｽ	ﾁ	ｱ	ﾐ			ｺ	ｶ	{![9!.[9		わゐ ゑれろゎゑ	わゐ ゑれろゎわ
Y9Ð!¤[!/Y	[illegible]	! ⊡[Y	D/t	t[w	a ⊡	ﾆ	ｨ	ｷ	ﾃ	ｽ	ﾁ	ｱ	ﾐ		ｵ			{![9!.[9		わゐ ゑれろゎゑ	わゐ ゑれろゎわ
Y9Ð!¤[!/Y	[illegible]	! ⊡[Y	D/t	t[w	a ⊡				ﾃ		ﾁ				ｵ	ｺ	ｶ	{![9!.[9		わゐ ゑれろゎゑ	わゐ ゑれろゎわ
Y9Ð!¤[!/Y	[illegible]	! ⊡[Y	D/t	t[w	a ⊡						ﾁ					ｺ	ｶ	{![9!.[9		わゐ ゑれろゎゑ	わゐ ゑれろゎわ
Y9Ð!¤[!/Y	[illegible]	! ⊡[Y	D/t	t[w	a ⊡	ﾆ	ｨ					ｱ	ﾐ					{![9!.[9		わゐ ゑれろゎゑ	わゐ ゑれろゎわ
Y9Ð!¤[!/Y	[illegible]	! ⊡[Y	D/t	t[w	a ⊡	ﾆ	ｨ	ｷ					ﾐ		ｵ	ｺ	ｶ	{![9!.[9		わゐ ゑれろゎゑ	わゐ ゑれろゎわ
Y9Ð!¤[!/Y	[illegible]	! ⊡[Y	D/t	t[w	a ⊡	ﾆ	ｨ					ｱ	ﾐ				ｶ	{![9!.[9		わゐ ゑれろゎゑ	わゐ ゑれろゎわ
Y9Ð.¤[LDI¤DwL£	[illegible]	. ⊡D	D/t	t[w	a ⊡										ｵ	ｺ		{![9!.[9		わゐ ゑれろゎゑ	わゐ ゑれろゎわ
Y9Ð!¤[!/Y	[illegible]	! ⊡[Y	D/t	t[w	a ⊡	ﾆ	ｨ	ｷ	ﾃ			ｱ	ﾐ		ｵ		ｶ	{![9!.[9		わゐ ゑれろゎゑ	わゐ ゑれろゎわ
Y9Ð!¤[!/Y	[illegible]	! ⊡[Y	D/t	t[w	a ⊡	ﾆ	ｨ	ｷ	ﾃ			ｱ	ﾐ		ｵ			{![9!.[9		わゐ ゑれろゎゑ	わゐ ゑれろゎわ
Y9Ð.¤[LDI¤DwL£	[illegible]	. ⊡D	D/t	t[w	a ⊡										ｵ	ｺ	ｶ	{![9!.[9		わゐ ゑれろゎゑ	わゐ ゑれろゎわ
Y9Ð.¤[LDI¤DwL£	[illegible]	. ⊡D	D/t	t[w	a ⊡	ﾆ	ｨ	ｷ	ﾃ	ｽ	ﾁ	ｱ			ｵ	ｺ	ｶ	{![9!.[9		わゐ ゑれろゎゑ	わゐ ゑれろゎわ

a /Eろ気れわEを [!59{9! [95!{{Ða!¤{9![
.ha !b5 tLb h-¤{I 99¤

!{{9a .[Ð59{/wLt¤Lhb	!{{9a .[Ðt!w¤ b-a .9w	/ha thb9b¤				.[h/Y95 ¤9wa Lb![{												{¤!¤-{	/ha a 9b¤{	ht¤Lhb![!¤¤!¤/I a 9b¤{{h[5{9t9w!¤9[Ð	
		¤I 9tw9{9b/9hC!b!..w9¹L!¤Lhb Lb5L/!¤9{ ¤I 9 tw9{9b/9hC¤I!¤/ha thb9b¤☆				/!¹L¤Ð° L¤I ! b-a .9wLb5L/!¤9{.[h/Y95 ¤9wa Lb![th{L¤Lhb /!¹L¤Ð° L¤I h-¤! b-a .9wLb5L/!¤9{ht9b ¤9wa Lb![th{L¤Lhb															
		I h-{LbD Y9Ð☆h[hw	Dwha a 9¤ /!t	t[w	a!¤{9![	ろ	ゎ	わ	ゐ	ゑ	を	ん	ゔ	゛	ろれ	ろろ	ろゎ			.!/Y{I 9[[° L¤I wL{	.!/Y{I 9[[° L¤I h-¤ wL{
Y9Ð!☞[!/Y	わわみうわ㊞わん	!⊡[Y	D/t	t[w	a⊡	ミ	ォ	オ	ā	ゑ		ん	ミ					{![9!.[9		わあ 気れろォろオ	わあ 気れろォわオ
Y9Ð!☞[!/Y	わわみうわ㊞わこ	!⊡[Y	D/t	t[w	a⊡							ん	ミ		ろオ	ろえ	ろォ	{![9!.[9		わあ 気れろォろオ	わあ 気れろォわオ
Y9Ð!☞[!/Y	わわみうわ㊞れ	!⊡[Y	D/t	t[w	a⊡	ミ							ミ		ろオ	ろえ		{![9!.[9		わあ 気れろォろオ	わあ 気れろォわオ
Y9Ð!☞[!/Y	わわみうわ㊞ろオ	!⊡[Y	D/t	t[w	a⊡	ミ			ā							ろえ		{![9!.[9		わあ 気れろォろオ	わあ 気れろォわオ
Y9Ð!☞[!/Y	わわみうわ㊞ろえ	!⊡[Y	D/t	t[w	a⊡	ミ	ォ		ā	ゑ	を	ん			ろオ	ろえ	ろォ	{![9!.[9		わあ 気れろォろオ	わあ 気れろォわオ
Y9Ð!☞[!/Y	わわみうわ㊞ろォ	!⊡[Y	D/t	t[w	a⊡								ミ					{![9!.[9		わあ 気れろォろオ	わあ 気れろォわオ
Y9Ð!☞[!/Y	わわみうわ㊞ろオ	!⊡[Y	D/t	t[w	a⊡			オ	ā	ゑ	を		ミ		ろオ	ろえ		{![9!.[9		わあ 気れろォろオ	わあ 気れろォわオ
Y9Ð!☞[!/Y	わわみうわ㊞ろゐ	!⊡[Y	D/t	t[w	a⊡			オ			を	ん	ミ		ろオ			{![9!.[9		わあ 気れろォろオ	わあ 気れろォわオ
Y9Ð!☞[!/Y	わわみうわ㊞ろゑ	!⊡[Y	D/t	t[w	a⊡						を	ん	ミ					{![9!.[9		わあ 気れろォろオ	わあ 気れろォわオ
Y9Ð!☞[!/Y	わわみうわ㊞ろを	!⊡[Y	D/t	t[w	a⊡					ゑ	を	ん	ミ			ろえ		{![9!.[9		わあ 気れろォろオ	わあ 気れろォわオ
Y9Ð!☞[!/Y	わわみうわ㊞ろん	!⊡[Y	D/t	t[w	a⊡	ミ	ォ											{![9!.[9		わあ 気れろォろオ	わあ 気れろォわオ
Y9Ð!☞[!/Y	わわみうわ㊞ろこ	!⊡[Y	D/t	t[w	a⊡	ミ	ォ	オ	ā	ゑ	を	ん	ミ					{![9!.[9		わあ 気れろォろオ	わあ 気れろォわオ
Y9Ð!☞[!/Y	わわみうわ㊞ろ	!⊡[Y	D/t	t[w	a⊡	ミ	ォ	オ	ā	ゑ	を	ん	ミ					{![9!.[9		わあ 気れろォろオ	わあ 気れろォわオ
Y9Ð/¤5!w\DwL£	わわみうわ㊞ゎオ	/⊡5D	D/t	t[w	a⊡	ミ					を	ん						{![9!.[9		わあ 気れろォろオ	わあ 気れろォわオ
Y9Ð/☞wh° b	わわみうわ㊞ゎえ	/⊡w	D/t	t[w	a⊡	ミ	ォ	オ	ā	ゑ	を							bh¤w9/ha a 9b595	{99 わわみうわ㊞わえ	わあ 気れろォろオ	わあ 気れろォわオ
Y9Ð/☞wh° b	わわみうわ㊞ゎォ	/⊡w	D/t	t[w	a⊡	ミ	ォ			ゑ	を							bh¤w9/ha a 9b595	{99 わわみうわ㊞わ	わあ 気れろォろオ	わあ 気れろォわオ
Y9Ð!☞[!/Y	わわみうわ㊞ゎオ	!⊡[Y	D/t	t[w	a⊡			オ				ん			ろオ	ろえ	ろォ	{![9!.[9		わあ 気れろォろオ	わあ 気れろォわオ
Y9Ð!☞[!/Y	わわみうわ㊞ゎゐ	!⊡[Y	D/t	t[w	a⊡			オ							ろオ	ろえ	ろォ	{![9!.[9		わあ 気れろォろオ	わあ 気れろォわオ
Y9Ð!☞[!/Y	わわみうわ㊞ゎゑ	!⊡[Y	D/t	t[w	a⊡			オ										{![9!.[9		わあ 気れろォろオ	わあ 気れろォわオ
Y9Ð!☞[!/Y	わわみうわ㊞ゎを	!⊡[Y	D/t	t[w	a⊡					ゑ	を	ん			ろオ	ろえ		{![9!.[9		わあ 気れろォろオ	わあ 気れろォわオ
Y9Ð!☞[!/Y	わわみうわ㊞ゎん	!⊡[Y	D/t	t[w	a⊡							ん				ろえ		{![9!.[9		わあ 気れろォろオ	わあ 気れろォわオ
Y9Ð/¤5!w\DwL£	わわみうわ㊞ゎこ	/⊡5D	D/t	t[w	a⊡	ミ	ォ	オ	ā	ゑ	を							{![9!.[9		わあ 気れろォろオ	わあ 気れろォわオ
Y9Ð/¤5!w\DwL£	わわみうわ㊞ゎ	/⊡5D	D/t	t[w	a⊡	ミ	ォ			ゑ	を							{![9!.[9		わあ 気れろォろオ	わあ 気れろォわオ
Y9Ð!☞[!/Y	わわみうわ㊞わオ	!⊡[Y	D/t	t[w	a⊡	ミ	ォ	オ	ā						ろオ	ろえ	ろォ	{![9!.[9		わあ 気れろォろオ	わあ 気れろォわオ
Y9Ð!☞[!/Y	わわみうわ㊞わえ	!⊡[Y	D/t	t[w	a⊡	ミ	ォ				を	ん	ミ				ろォ	{![9!.[9		わあ 気れろォろオ	わあ 気れろォわオ
Y9Ð!☞[!/Y	わわみうわ㊞わォ	!⊡[Y	D/t	t[w	a⊡				ā	ゑ		ん	ミ		ろオ			{![9!.[9		わあ 気れろォろオ	わあ 気れろォわオ
Y9Ð!☞[!/Y	わわみうわ㊞わオ	!⊡[Y	D/t	t[w	a⊡				ā						ろオ			{![9!.[9		わあ 気れろォろオ	わあ 気れろォわオ
Y9Ð!☞[!/Y	わわみうわ㊞わゐ	!⊡[Y	D/t	t[w	a⊡				ā	ゑ			ミ		ろオ			{![9!.[9		わあ 気れろォろオ	わあ 気れろォわオ
Y9Ð!☞[!/Y	わわみうわ㊞わゑ	!⊡[Y	D/t	t[w	a⊡	ミ	ォ		ā	ゑ	を	ん					ろォ	{![9!.[9		わあ 気れろォろオ	わあ 気れろォわオ
Y9Ð!¤Ð9[h°	わわみうわ㊞わを	!⊡I	D/t	t[w	a⊡													{![9!.[9		わあ 気れろォろオ	わあ 気れろォわオ
Y9Ð.¤[DI¤DwL£	わわみうわ㊞わん	.⊡D	D/t	t[w	a⊡					ゑ			ミ					{![9!.[9		わあ 気れろォろオ	わあ 気れろォわオ
Y9Ð.¤[DI¤DwL£	わわみうわ㊞わこ	.⊡D	D/t	t[w	a⊡					ゑ			ミ			ろえ	ろォ	{![9!.[9		わあ 気れろォろオ	わあ 気れろォわオ
Y9Ð.¤[DI¤DwL£	わわみうわ㊞わ	.⊡D	D/t	t[w	a⊡			オ	ā	ゑ			ミ		ろオ	ろえ	ろォ	{![9!.[9		わあ 気れろォろオ	わあ 気れろォわオ
Y9Ð.¤[DI¤DwL£	わわみうわ㊞みオ	.⊡D	D/t	t[w	a⊡	ミ	ォ	オ	ā	ゑ			ミ		ろオ	ろえ	ろォ	{![9!.[9		わあ 気れろォろオ	わあ 気れろォわオ
Y9Ð!☞[!/Y	わわみうわ㊞みえ	!⊡[Y	D/t	t[w	a⊡	ミ	ォ	オ		ゑ						ろえ		{![9!.[9		わあ 気れろォろオ	わあ 気れろォわオ
Y9Ð!☞[!/Y	わわみうわ㊞みォ	!⊡[Y	D/t	t[w	a⊡		ォ	オ		ゑ						ろえ		{![9!.[9		わあ 気れろォろオ	わあ 気れろォわオ
Y9Ð!☞[!/Y	わわみうわ㊞みオ	!⊡[Y	D/t	t[w	a⊡	ミ	ォ	オ								ろえ		{![9!.[9		わあ 気れろォろオ	わあ 気れろォわオ
Y9Ð!☞[!/Y	わわみうわ㊞みゐ	!⊡[Y	D/t	t[w	a⊡	ミ	ォ	オ	ā	ゑ						ろえ	ろォ	{![9!.[9		わあ 気れろォろオ	わあ 気れろォわオ
Y9Ð!☞[!/Y	わわみうわ㊞みゑ	!⊡[Y	D/t	t[w	a⊡		ォ	オ	ā	ゑ						ろえ	ろォ	{![9!.[9		わあ 気れろォろオ	わあ 気れろォわオ
Y9Ð!☞[!/Y	わわみうわ㊞みを	!⊡[Y	D/t	t[w	a⊡	ミ												{![9!.[9		わあ 気れろォろオ	わあ 気れろォわオ
Y9Ð!☞[!/Y	わわみうわ㊞みん	!⊡[Y	D/t	t[w	a⊡	ミ	ォ	オ										{![9!.[9		わあ 気れろォろオ	わあ 気れろォわオ
Y9Ð.¤[DI¤DwL£	わわみうわ㊞みこ	.⊡D	D/t	t[w	a⊡	ミ	ォ	オ	ā		を					ろえ	ろォ	{![9!.[9		わあ 気れろォろオ	わあ 気れろォわオ
Y9Ð!☞[!/Y	わわみうわ㊞み	!⊡[Y	D/t	t[w	a⊡				ā			ん	ミ					{![9!.[9		わあ 気れろォろオ	わあ 気れろォわオ
Y9Ð!☞[!/Y	わわみうわ㊞ゑオ	!⊡[Y	D/t	t[w	a⊡		ォ						ミ					{![9!.[9		わあ 気れろォろオ	わあ 気れろォわオ
Y9Ð!☞[!/Y	わわみうわ㊞ゑえ	!⊡[Y	D/t	t[w	a⊡		ォ		ā				ミ		ろオ			{![9!.[9		わあ 気れろォろオ	わあ 気れろォわオ
Y9Ð!☞[!/Y	わわみうわ㊞ゑォ	!⊡[Y	D/t	t[w	a⊡	ミ	ォ	オ	ā	ゑ	を		ミ		ろオ	ろえ	ろォ	{![9!.[9		わあ 気れろォろオ	わあ 気れろォわオ
Y9Ð!☞[!/Y	わわみうわ㊞ゑオ	!⊡[Y	D/t	t[w	a⊡	ミ					を	ん	ミ				ろォ	{![9!.[9		わあ 気れろォろオ	わあ 気れろォわオ
Y9Ð!☞[!/Y	わわみうわ㊞ゑゐ	!⊡[Y	D/t	t[w	a⊡		ォ	オ	ā		を		ミ		ろオ	ろえ	ろォ	{![9!.[9		わあ 気れろォろオ	わあ 気れろォわオ
Y9Ð!☞[!/Y	わわみうわ㊞ゑゑ	!⊡[Y	D/t	t[w	a⊡		ォ				を	ん	ミ		ろオ	ろえ		{![9!.[9		わあ 気れろォろオ	わあ 気れろォわオ
Y9Ð!☞[!/Y	わわみうわ㊞ゑを	!⊡[Y	D/t	t[w	a⊡	ミ	ォ	オ	ā		を				ろオ	ろえ	ろォ	{![9!.[9		わあ 気れろォろオ	わあ 気れろォわオ
Y9Ð!☞[!/Y	わわみうわ㊞ゑん	!⊡[Y	D/t	t[w	a⊡					ゑ			ミ					{![9!.[9		わあ 気れろォろオ	わあ 気れろォわオ
Y9Ð!☞[!/Y	わわみうわ㊞ゑこ	!⊡[Y	D/t	t[w	a⊡				ā						ろオ			{![9!.[9		わあ 気れろォろオ	わあ 気れろォわオ
Y9Ð!☞[!/Y	わわみうわ㊞ゑ	!⊡[Y	D/t	t[w	a⊡				ā			ん	ミ		ろオ	ろえ	ろォ	{![9!.[9		わあ 気れろォろオ	わあ 気れろォわオ
Y9Ð!☞[!/Y	わわみうわ㊞をオ	!⊡[Y	D/t	t[w	a⊡					ゑ	を		ミ		ろオ	ろえ	ろォ	{![9!.[9		わあ 気れろォろオ	わあ 気れろォわオ
Y9Ð!☞[!/Y	わわみうわ㊞をえ	!⊡[Y	D/t	t[w	a⊡				ā	ゑ	を		ミ		ろオ	ろえ	ろォ	{![9!.[9		わあ 気れろォろオ	わあ 気れろォわオ
Y9Ð!☞[!/Y	わわみうわ㊞をォ	!⊡[Y	D/t	t[w	a⊡	ミ	ォ			ゑ	を	ん	ミ			ろえ	ろォ	{![9!.[9		わあ 気れろォろオ	わあ 気れろォわオ
Y9Ð!☞[!/Y	わわみうわ㊞をオ	!⊡[Y	D/t	t[w	a⊡				ā	ゑ		ん	ミ		ろオ	ろえ	ろォ	{![9!.[9		わあ 気れろォろオ	わあ 気れろォわオ
Y9Ð!☞[!/Y	わわみうわ㊞をゐ	!⊡[Y	D/t	t[w	a⊡				ā			ん			ろオ			{![9!.[9		わあ 気れろォろオ	わあ 気れろォわオ
Y9Ð!☞[!/Y	わわみうわ㊞をゑ	!⊡[Y	D/t	t[w	a⊡						を	ん	ミ		ろオ	ろえ	ろォ	{![9!.[9		わあ 気れろォろオ	わあ 気れろォわオ
Y9Ð!☞[!/Y	わわみうわ㊞をを	!⊡[Y	D/t	t[w	a⊡	ミ	ォ				を	ん				ろえ	ろォ	{![9!.[9		わあ 気れろォろオ	わあ 気れろォわオ
Y9Ð!☞[!/Y	わわみうわ㊞をん	!⊡[Y	D/t	t[w	a⊡					ゑ			ミ		ろオ			{![9!.[9		わあ 気れろォろオ	わあ 気れろォわオ
Y9Ð!☞[!/Y	わわみうわ㊞をこ	!⊡[Y	D/t	t[w	a⊡	ミ	ォ	オ	ā			ん	ミ		ろオ	ろえ	ろォ	{![9!.[9		わあ 気れろォろオ	わあ 気れろォわオ
Y9Ð!☞[!/Y	わわみうわ㊞を	!⊡[Y	D/t	t[w	a⊡				ā									{![9!.[9		わあ 気れろォろオ	わあ 気れろォわオ
Y9Ð!☞[!/Y	わわみうわ㊞んオ	!⊡[Y	D/t	t[w	a⊡	ミ	ォ	オ			を	ん			ろオ	ろえ	ろォ	{![9!.[9		わあ 気れろォろオ	わあ 気れろォわオ
Y9Ð!☞[!/Y	わわみうわ㊞んえ	!⊡[Y	D/t	t[w	a⊡							ん	ミ			ろえ		{![9!.[9		わあ 気れろォろオ	わあ 気れろォわオ
Y9Ð!☞[!/Y	わわみうわ㊞んォ	!⊡[Y	D/t	t[w	a⊡	ミ		オ		ゑ			ミ		ろオ		ろォ	{![9!.[9		わあ 気れろォろオ	わあ 気れろォわオ
Y9Ð!☞[!/Y	わわみうわ㊞んオ	!⊡[Y	D/t	t[w	a⊡		ォ		ā		を	ん				ろえ		{![9!.[9		わあ 気れろォろオ	わあ 気れろォわオ
Y9Ð!☞[!/Y	わわみうわ㊞んゐ	!⊡[Y	D/t	t[w	a⊡		ォ								ろオ	ろえ	ろォ	{![9!.[9		わあ 気れろォろオ	わあ 気れろォわオ
Y9Ð!☞[!/Y	わわみうわ㊞んゑ	!⊡[Y	D/t	t[w	a⊡							ん			ろオ			{![9!.[9		わあ 気れろォろオ	わあ 気れろォわオ
Y9Ð!☞[!/Y	わわみうわ㊞んを	!⊡[Y	D/t	t[w	a⊡		ォ		ā			ん						{![9!.[9		わあ 気れろォろオ	わあ 気れろォわオ
Y9Ð!☞[!/Y	わわみうわ㊞んん	!⊡[Y	D/t	t[w	a⊡	ミ	ォ	オ	ā		を				ろオ	ろえ	ろォ	{![9!.[9		わあ 気れろォろオ	わあ 気れろォわオ
Y9Ð!☞[!/Y	わわみうわ㊞んこ	!⊡[Y	D/t	t[w	a⊡	ミ		オ		ゑ						ろえ	ろォ	{![9!.[9		わあ 気れろォろオ	わあ 気れろォわオ
Y9Ð!☞[!/Y	わわみうわ㊞ん	!⊡[Y	D/t	t[w	a⊡	ミ		オ		ゑ			ミ		ろオ	ろえ	ろォ	{![9!.[9		わあ 気れろォろオ	わあ 気れろォわオ

! {{9a . [Ð59{/wLt¤Lhb	! {{9a . [Ðt! w¤ b- a . 9w	/ha thb9b¤				. [h/Y95 ¤9wa Lb! [{												{¤! ¤- {	/ha a 9b¤{	ht¤Lhb! [! ¤¤! ¤/I a 9b¤{ {h[5 {9t9wL ¤9[Ð	
		¤I 9tw9{9b/9hC! b ! . . w9¹ L! ¤Lhb Lb5L/! ¤9{ ¤I 9 tw9{9b/9hC¤I ! ¤/ha thb9b¤♕				/! ¹ L¤Ð° L¤I ! b- a . 9wLb5L/! ¤9{ . [h/Y95 ¤9wa Lb! [th{L¤Lhb /! ¹ L¤Ð° L¤I h- ¤! b- a . 9wLb5L/! ¤9{ ht9b ¤9wa Lb! [th{L¤Lhb															
		I h- {LbD Y9Ð♨h[hw	Dwha a 9¤ /! t	t[w	a ! ¤{9! [	ろ	ゎ	わ	ゐ	ゑ	を	ん	ゔ	゛	ゑれ	ゑろ	ゑゎ			. ! /Y{I 9[[° L¤I wL {	. ! /Y{I 9[[° L¤I h- ¤ wL {
Y9Ð! ☞[! /Y	わわゔわゐ[illegible]	! ⊡[Y	D/t	t[w	a ⊡		ｨ					ﾉ	ﾆ					{! [9! . [9		わあ 気⊡ゑわゑ	わあ 気⊡ゑわわ
Y9Ð! ☞[! /Y	わわゔわゐ[illegible]	! ⊡[Y	D/t	t[w	a ⊡		ｨ		ā			ﾉ	ﾆ					{! [9! . [9		わあ 気⊡ゑわゑ	わあ 気⊡ゑわわ
Y9Ð! ☞[! /Y	わわゔわゐ[illegible]	! ⊡[Y	D/t	t[w	a ⊡				ā	ゑ	を		ﾆ		ゑｵ	ゑｴ		{! [9! . [9		わあ 気⊡ゑわゑ	わあ 気⊡ゑわわ
Y9Ð! ☞[! /Y	わわゔわゐ[illegible]	! ⊡[Y	D/t	t[w	a ⊡	ﾐ	ｨ	ｵ	ā			ﾉ	ﾆ		ゑｵ	ゑｴ		{! [9! . [9		わあ 気⊡ゑわゑ	わあ 気⊡ゑわわ
Y9Ð! ☞[! /Y	わわゔわゐ[illegible]	! ⊡[Y	D/t	t[w	a ⊡			ｵ	ā						ゑｵ			{! [9! . [9		わあ 気⊡ゑわゑ	わあ 気⊡ゑわわ
Y9Ð! ☞[! /Y	わわゔわゐ[illegible]	! ⊡[Y	D/t	t[w	a ⊡			ｵ	ā							ゑｴ	ゑｨ	{! [9! . [9		わあ 気⊡ゑわゑ	わあ 気⊡ゑわわ
Y9Ð! ☞[! /Y	わわゔわゐ[illegible]	! ⊡[Y	D/t	t[w	a ⊡	ﾐ	ｨ	ｵ	ā		を	ﾉ	ﾆ		ゑｵ	ゑｴ		{! [9! . [9		わあ 気⊡ゑわゑ	わあ 気⊡ゑわわ
Y9Ð! ☞[! /Y	わわゔわゐ[illegible]	! ⊡[Y	D/t	t[w	a ⊡	ﾐ	ｨ	ｵ	ā	ゑ	を	ﾉ	ﾆ				ゑｨ	{! [9! . [9		わあ 気⊡ゑわゑ	わあ 気⊡ゑわわ
Y9Ð! ☞[! /Y	わわゔわゐ[illegible]	! ⊡[Y	D/t	t[w	a ⊡	ﾐ	ｨ	ｵ							ゑｵ	ゑｴ	ゑｨ	{! [9! . [9		わあ 気⊡ゑわゑ	わあ 気⊡ゑわわ
Y9Ð! ☞[! /Y	わわゔわゐ[illegible]	! ⊡[Y	D/t	t[w	a ⊡	ﾐ	ｨ	ｵ			を					ゑｴ	ゑｨ	{! [9! . [9		わあ 気⊡ゑわゑ	わあ 気⊡ゑわわ
Y9Ð! ☞[! /Y	わわゔわゐ[illegible]	! ⊡[Y	D/t	t[w	a ⊡	ﾐ		ｵ	ā							ゑｴ		{! [9! . [9		わあ 気⊡ゑわゑ	わあ 気⊡ゑわわ
Y9Ð! ☞[! /Y	わわゔわゐ[illegible]	! ⊡[Y	D/t	t[w	a ⊡	ﾐ	ｨ	ｵ			を				ゑｵ	ゑｴ	ゑｨ	{! [9! . [9		わあ 気⊡ゑわゑ	わあ 気⊡ゑわわ
Y9Ð! ☞[! /Y	わわゔわゐ[illegible]	! ⊡[Y	D/t	t[w	a ⊡	ﾐ		ｵ	ā							ゑｴ	ゑｨ	{! [9! . [9		わあ 気⊡ゑわゑ	わあ 気⊡ゑわわ
Y9Ð! ☞[! /Y	わわゔわゐ[illegible]	! ⊡[Y	D/t	t[w	a ⊡				ā	ゑ		ﾉ				ゑｴ	ゑｨ	{! [9! . [9		わあ 気⊡ゑわゑ	わあ 気⊡ゑわわ
Y9Ð. ☞[DI ¤DwL£	わわゔわゐ[illegible]	. [D	D/t	t[w	a ⊡	ﾐ	ｨ	ｵ	ā				ﾆ		ゑｵ	ゑｴ	ゑｨ	{! [9! . [9		わあ 気⊡ゑわゑ	わあ 気⊡ゑわわ
Y9Ð. ☞[DI ¤DwL£	わわゔわゐ[illegible]	. [D	D/t	t[w	a ⊡	ﾐ	ｨ	ｵ	ā				ﾆ		ゑｵ			{! [9! . [9		わあ 気⊡ゑわゑ	わあ 気⊡ゑわわ
Y9Ð! ☞[! /Y	わわゔわゐ[illegible]	! ⊡[Y	D/t	t[w	a ⊡	ﾐ					を	ﾉ	ﾆ		ゑｵ			{! [9! . [9		わあ 気⊡ゑわゑ	わあ 気⊡ゑわわ
Y9Ð! ☞[! /Y	わわゔわゐ[illegible]	! ⊡[Y	D/t	t[w	a ⊡				ā		を		ﾆ					{! [9! . [9		わあ 気⊡ゑわゑ	わあ 気⊡ゑわわ
Y9Ð! ☞[! /Y	わわゔわゐ[illegible]	! ⊡[Y	D/t	t[w	a ⊡				ā	ゑ	を	ﾉ				ゑｴ	ゑｨ	{! [9! . [9		わあ 気⊡ゑわゑ	わあ 気⊡ゑわわ
Y9Ð! ☞[! /Y	わわゔわゐ[illegible]	! ⊡[Y	D/t	t[w	a ⊡	ﾐ	ｨ	ｵ	ā	ゑ	を	ﾉ	ﾆ			ゑｴ	ゑｨ	{! [9! . [9		わあ 気⊡ゑわゑ	わあ 気⊡ゑわわ
Y9Ð! ☞[! /Y	わわゔわゐ[illegible]	! ⊡[Y	D/t	t[w	a ⊡	ﾐ	ｨ	ｵ				ﾉ	ﾆ					{! [9! . [9		わあ 気⊡ゑわゑ	わあ 気⊡ゑわわ
Y9Ð! ☞[! /Y	わわゔわゐ[illegible]	! ⊡[Y	D/t	t[w	a ⊡	ﾐ	ｨ	ｵ				ﾉ	ﾆ		ゑｵ			{! [9! . [9		わあ 気⊡ゑわゑ	わあ 気⊡ゑわわ
Y9Ð! ☞[! /Y	わわゔわゐ[illegible]	! ⊡[Y	D/t	t[w	a ⊡				ā	ゑ	を		ﾆ					{! [9! . [9		わあ 気⊡ゑわゑ	わあ 気⊡ゑわわ
Y9Ð! ☞[! /Y	わわゔわゐ[illegible]	! ⊡[Y	D/t	t[w	a ⊡					ゑ	を	ﾉ	ﾆ		ゑｵ	ゑｴ	ゑｨ	{! [9! . [9		わあ 気⊡ゑわゑ	わあ 気⊡ゑわわ
Y9Ð! ☞[! /Y	わわゔわゐ[illegible]	! ⊡[Y	D/t	t[w	a ⊡					ゑ	を	ﾉ	ﾆ				ゑｨ	{! [9! . [9		わあ 気⊡ゑわゑ	わあ 気⊡ゑわわ
Y9Ð! ☞[! /Y	わわゔわゐ[illegible]	! ⊡[Y	D/t	t[w	a ⊡							ﾉ	ﾆ				ゑｨ	{! [9! . [9		わあ 気⊡ゑわゑ	わあ 気⊡ゑわわ
Y9Ð! ☞[! /Y	わわゔわゐ[illegible]	! ⊡[Y	D/t	t[w	a ⊡		ｨ	ｵ		ゑ	を	ﾉ			ゑｵ	ゑｴ	ゑｨ	{! [9! . [9		わあ 気⊡ゑわゑ	わあ 気⊡ゑわわ
Y9Ð! ☞[! /Y	わわゔわゐ[illegible]	! ⊡[Y	D/t	t[w	a ⊡			ｵ							ゑｵ	ゑｴ	ゑｨ	{! [9! . [9		わあ 気⊡ゑわゑ	わあ 気⊡ゑわわ
Y9Ð! ☞[! /Y	わわゔわゐ[illegible]	! ⊡[Y	D/t	t[w	a ⊡				ā	ゑ	を	ﾉ	ﾆ		ゑｵ	ゑｴ	ゑｨ	{! [9! . [9		わあ 気⊡ゑわゑ	わあ 気⊡ゑわわ
Y9Ð! ☞[! /Y	わわゔわゐ[illegible]	! ⊡[Y	D/t	t[w	a ⊡			ｵ	ā	ゑ	を	ﾉ	ﾆ		ゑｵ	ゑｴ	ゑｨ	{! [9! . [9		わあ 気⊡ゑわゑ	わあ 気⊡ゑわわ
Y9Ð! ☞[! /Y	わわゔわゐ[illegible]	! ⊡[Y	D/t	t[w	a ⊡	ﾐ	ｨ	ｵ	ā				ﾆ					{! [9! . [9		わあ 気⊡ゑわゑ	わあ 気⊡ゑわわ
Y9Ð! ☞[! /Y	わわゔわゐ[illegible]	! ⊡[Y	D/t	t[w	a ⊡		ｨ	ｵ										{! [9! . [9		わあ 気⊡ゑわゑ	わあ 気⊡ゑわわ
Y9Ð! ☞[! /Y	わわゔわゐ[illegible]	! ⊡[Y	D/t	t[w	a ⊡								ﾆ		ゑｵ	ゑｴ		{! [9! . [9		わあ 気⊡ゑわゑ	わあ 気⊡ゑわわ
Y9Ð! ☞[! /Y	わわゔわゐ[illegible]	! ⊡[Y	D/t	t[w	a ⊡	ﾐ		ｵ		ゑ						ゑｴ		{! [9! . [9		わあ 気⊡ゑわゑ	わあ 気⊡ゑわわ
Y9Ð! ☞[! /Y	わわゔわゐ[illegible]	! ⊡[Y	D/t	t[w	a ⊡	ﾐ		ｵ		ゑ			ﾆ		ゑｵ	ゑｴ		{! [9! . [9		わあ 気⊡ゑわゑ	わあ 気⊡ゑわわ
Y9Ð! ☞[! /Y	わわゔわゐ[illegible]	! ⊡[Y	D/t	t[w	a ⊡		ｨ	ｵ		ゑ	を	ﾉ				ゑｴ	ゑｨ	{! [9! . [9		わあ 気⊡ゑわゑ	わあ 気⊡ゑわわ
Y9Ð! ☞[! /Y	わわゔわゐ[illegible]	! ⊡[Y	D/t	t[w	a ⊡	ﾐ			ā	ゑ	を		ﾆ		ゑｵ		ゑｨ	{! [9! . [9		わあ 気⊡ゑわゑ	わあ 気⊡ゑわわ
Y9Ð! ☞[! /Y	わわゔわゐ[illegible]	! ⊡[Y	D/t	t[w	a ⊡	ﾐ			ā	ゑ			ﾆ		ゑｵ		ゑｨ	{! [9! . [9		わあ 気⊡ゑわゑ	わあ 気⊡ゑわわ
Y9Ð! ☞[! /Y	わわゔわゐ[illegible]	! ⊡[Y	D/t	t[w	a ⊡	ﾐ	ｨ	ｵ	ā	ゑ			ﾆ		ゑｵ	ゑｴ	ゑｨ	{! [9! . [9		わあ 気⊡ゑわゑ	わあ 気⊡ゑわわ
Y9Ð! ☞[! /Y	わわゔわゐ[illegible]	! ⊡[Y	D/t	t[w	a ⊡		ｨ	ｵ		ゑ	を	ﾉ			ゑｵ	ゑｴ	ゑｨ	{! [9! . [9	{99 わわゔわゐ[illegible]	わあ 気⊡ゑわゑ	わあ 気⊡ゑわわ
Y9Ð! ☞[! /Y	わわゔわゐ[illegible]	! ⊡[Y	D/t	t[w	a ⊡	ﾐ	ｨ	ｵ	ā				ﾆ					{! [9! . [9	{99 わわゔわゐ[illegible]	わあ 気⊡ゑわゑ	わあ 気⊡ゑわわ
Y9Ð! ☞[! /Y	わわゔわゐ[illegible]	! ⊡[Y	D/t	t[w	a ⊡		ｨ	ｵ										{! [9! . [9	{99 わわゔわゐ[illegible]	わあ 気⊡ゑわゑ	わあ 気⊡ゑわわ
Y9Ð! ☞[! /Y	わわゔわゐ[illegible]	! ⊡[Y	D/t	t[w	a ⊡								ﾆ		ゑｵ	ゑｴ		{! [9! . [9	{99 わわゔわゐ[illegible]	わあ 気⊡ゑわゑ	わあ 気⊡ゑわわ
Y9Ð! ☞[! /Y	わわゔわゐ[illegible]	! ⊡[Y	D/t	t[w	a ⊡	ﾐ		ｵ		ゑ						ゑｴ		{! [9! . [9	{99 わわゔわゐ[illegible]	わあ 気⊡ゑわゑ	わあ 気⊡ゑわわ
Y9Ð! ☞[! /Y	わわゔわゐ[illegible]	! ⊡[Y	D/t	t[w	a ⊡	ﾐ		ｵ		ゑ			ﾆ		ゑｵ	ゑｴ		{! [9! . [9	{99 わわゔわゐ[illegible]	わあ 気⊡ゑわゑ	わあ 気⊡ゑわわ
Y9Ð! ☞[! /Y	わわゔわゐ[illegible]	! ⊡[Y	D/t	t[w	a ⊡		ｨ		ā		を	ﾉ	ﾆ		ゑｵ	ゑｴ	ゑｨ	{! [9! . [9		わあ 気⊡ゑわゑ	わあ 気⊡ゑわわ
Y9Ð! ☞[! /Y	わわゔわゐ[illegible]	! ⊡[Y	D/t	t[w	a ⊡			ｵ	ā							ゑｴ	ゑｨ	{! [9! . [9	{99 わわゔわゐ[illegible]	わあ 気⊡ゑわゑ	わあ 気⊡ゑわわ
Y9Ð! ☞[! /Y	わわゔわゐ[illegible]	! ⊡[Y	D/t	t[w	a ⊡			ｵ	ā						ゑｵ	ゑｴ	ゑｨ	{! [9! . [9	{99 わわゔわゐ[illegible]	わあ 気⊡ゑわゑ	わあ 気⊡ゑわわ
Y9Ð! ☞[! /Y	わわゔわゐ[illegible]	! ⊡[Y	D/t	t[w	a ⊡	ﾐ	ｨ			ゑ	を	ﾉ	ﾆ		ゑｵ			{! [9! . [9		わあ 気⊡ゑわゑ	わあ 気⊡ゑわわ
Y9Ð! ☞[! /Y	わわゔわゐ[illegible]	! ⊡[Y	D/t	t[w	a ⊡										ゑｵ			{! [9! . [9		わあ 気⊡ゑわゑ	わあ 気⊡ゑわわ
Y9Ð! ☞[! /Y	わわゔわゐ[illegible]	! ⊡[Y	D/t	t[w	a ⊡			ｵ	ā	ゑ	を		ﾆ					{! [9! . [9		わあ 気⊡ゑわゑ	わあ 気⊡ゑわわ
Y9Ð. ☞[DI ¤DwL£	わわゔわゐ[illegible]	. [D	D/t	t[w	a ⊡	ﾐ	ｨ	ｵ	ā				ﾆ			ゑｴ	ゑｨ	{! [9! . [9		わあ 気⊡ゑわゑ	わあ 気⊡ゑわわ
Y9Ð. ☞[DI ¤DwL£	わわゔわゐ[illegible]	. [D	D/t	t[w	a ⊡	ﾐ	ｨ	ｵ	ā				ﾆ					{! [9! . [9		わあ 気⊡ゑわゑ	わあ 気⊡ゑわわ
Y9Ð! ☞[! /Y	わわゔわゐ[illegible]	! ⊡[Y	D/t	t[w	a ⊡										ゑｵ	ゑｴ	ゑｨ	{! [9! . [9	{99 わわゔわゐ[illegible]	わあ 気⊡ゑわゑ	わあ 気⊡ゑわわ
Y9Ð. ☞[DI ¤DwL£	わわゔわゐ[illegible]	. [D	D/t	t[w	a ⊡							ﾉ	ﾆ				ゑｨ	{! [9! . [9		わあ 気⊡ゑわゑ	わあ 気⊡ゑわわ
Y9Ð! ☞[! /Y	わわゔわゐ[illegible]	! ⊡[Y	D/t	t[w	a ⊡							ﾉ	ﾆ		ゑｵ	ゑｴ	ゑｨ	{! [9! . [9	{99 わわゔわゐ[illegible]	わあ 気⊡ゑわゑ	わあ 気⊡ゑわわ
Y9Ð! ☞[! /Y	わわゔわゐ[illegible]	! ⊡[Y	D/t	t[w	a ⊡		ｨ						ﾆ		ゑｵ	ゑｴ	ゑｨ	{! [9! . [9		わあ 気⊡ゑわゑ	わあ 気⊡ゑわわ
Y9Ð! ☞[! /Y	わわゔわゐ[illegible]	! ⊡[Y	D/t	t[w	a ⊡		ｨ						ﾆ					{! [9! . [9		わあ 気⊡ゑわゑ	わあ 気⊡ゑわわ
Y9Ð. ☞[DI ¤DwL£	わわゔわゐ[illegible]	. [D	D/t	t[w	a ⊡	ﾐ	ｨ	ｵ	ā				ﾆ			ゑｴ	ゑｨ	bh¤w9/ha a 9b595	{99 わわゔわゐ[illegible]	わあ 気⊡ゑわゑ	わあ 気⊡ゑわわ
Y9Ð. ☞[DI ¤DwL£	わわゔわゐ[illegible]	. [D	D/t	t[w	a ⊡	ﾐ	ｨ	ｵ	ā				ﾆ					bh¤w9/ha a 9b595	{99 わわゔわゐ[illegible]	わあ 気⊡ゑわゑ	わあ 気⊡ゑわわ
Y9Ð! ☞[! /Y	わわゔわゐ[illegible]	! ⊡[Y	D/t	t[w	a ⊡	ﾐ	ｨ				を				ゑｵ			{! [9! . [9		わあ 気⊡ゑわゑ	わあ 気⊡ゑわわ
Y9Ð! ☞[! /Y	わわゔわゐ[illegible]	! ⊡[Y	D/t	t[w	a ⊡	ﾐ	ｨ	ｵ			を	ﾉ			ゑｵ	ゑｴ	ゑｨ	{! [9! . [9	{99 わわゔわゐ[illegible]	わあ 気⊡ゑわゑ	わあ 気⊡ゑわわ
Y9Ð! ☞[! /Y	わわゔわゐ[illegible]	! ⊡[Y	D/t	t[w	a ⊡		ｨ		ā		を		ﾆ					{! [9! . [9		わあ 気⊡ゑわゑ	わあ 気⊡ゑわわ
Y9Ð! ☞[! /Y	わわゔわゐ[illegible]	! ⊡[Y	D/t	t[w	a ⊡		ｨ		ā		を							{! [9! . [9		わあ 気⊡ゑわゑ	わあ 気⊡ゑわわ
Y9Ð! ☞[! /Y	わわゔわゐ[illegible]	! ⊡[Y	D/t	t[w	a ⊡			ｵ	ā		を		ﾆ					{! [9! . [9		わあ 気⊡ゑわゑ	わあ 気⊡ゑわわ
Y9Ð! ☞[! /Y	わわゔわゐ[illegible]	! ⊡[Y	D/t	t[w	a ⊡				ā			ﾉ			ゑｵ	ゑｴ	ゑｨ	{! [9! . [9		わあ 気⊡ゑわゑ	わあ 気⊡ゑわわ
Y9Ð/☞5! wY DwL£	わわゔわゐ[illegible]	/ 5D	D/t	t[w	a ⊡			ｵ	ā									{! [9! . [9		わあ 気⊡ゑわゑ	わあ 気⊡ゑわわ
Y9Ð! ☞[! /Y	わわゔわゐ[illegible]	! ⊡[Y	D/t	t[w	a ⊡	ﾐ	ｨ	ｵ			を		ﾆ			ゑｴ	ゑｨ	{! [9! . [9		わあ 気⊡ゑわゑ	わあ 気⊡ゑわわ
Y9Ð! ☞[! /Y	わわゔわゐ[illegible]	! ⊡[Y	D/t	t[w	a ⊡					ゑ	を	ﾉ	ﾆ		ゑｵ			{! [9! . [9		わあ 気⊡ゑわゑ	わあ 気⊡ゑわわ
Y9Ð. ☞[DI ¤DwL£	わわゔわゐ[illegible]	. [D	D/t	t[w	a ⊡							ﾉ			ゑｵ	ゑｴ	ゑｨ	{! [9! . [9		わあ 気⊡ゑわゑ	わあ 気⊡ゑわわ
Y9Ð! ☞[! /Y	わわゔわゐ[illegible]	! ⊡[Y	D/t	t[w	a ⊡		ｨ	ｵ		ゑ	を	ﾉ	ﾆ		ゑｵ	ゑｴ	ゑｨ	{! [9! . [9		わあ 気⊡ゑわゑ	わあ 気⊡ゑわわ
Y9Ð! ☞[! /Y	わわゔわゐ[illegible]	! ⊡[Y	D/t	t[w	a ⊡					ゑ	を	ﾉ	ﾆ					{! [9! . [9		わあ 気⊡ゑわゑ	わあ 気⊡ゑわわ
Y9Ð! ☞[! /Y	わわゔわゐ[illegible]	! ⊡[Y	D/t	t[w	a ⊡			ｵ	ā				ﾆ		ゑｵ	ゑｴ	ゑｨ	{! [9! . [9		わあ 気⊡ゑわゑ	わあ 気⊡ゑわわ

a ÆゑゑれゎÆを [! 5 9 { 9! [95 ! { { Ð a ! ¤ { 9! [
. h a ! b 5 t Lb h - ¤ { I 99¤

! { { 9a . [Ð 5 9{ / wLt ¤Lhb	! { { 9a . [Ð t ! w¤ b - a . 9w	/ h a t h b 9b ¤				. [h / Y95 ¤9wa Lb ! [{												{ ¤! ¤ - {	/ h a a 9b ¤{	ht ¤Lhb ! [! ¤¤! ¤/ I a 9b ¤{ { h [5 { 9t 9w! ¤9[Ð	
		¤I 9 t w9{ 9b / 9 h C! b ! . . w9¹ L! ¤Lhb Lb5 L/ ! ¤9{ ¤I 9 t w9{ 9b / 9 h C¤I ! ¤ / h a t h b 9b ¤				/ ! ¹ L¤Ð° L¤I ! b - a . 9wLb5 L/ ! ¤9{ . [h / Y95 ¤9wa Lb ! [t h { L¤Lhb / ! ¹ L¤Ð° L¤I h - ¤ ! b - a . 9wLb5 L/ ! ¤9{ ht 9b ¤9wa Lb ! [t h { L¤Lhb															
		I h - { LbD Y9Ð ¥ h [hw	Dwha a 9¤ / ! t	t [w	a ! ¤ { 9! [	ろ	ゎ	わ	ゐ	ゑ	を	ん	う	゛	ゑれ	ゑゑ	ゑゎ			. ! / Y{ I 9[[° L¤I wL {	. ! / Y{ I 9[[° L¤I h - ¤ wL {
Y9Ð! ☞[! / Y	[illegible]	! ☐[Y	D/ t	t [w	a ☐	ﾆ	ｫ	ｵ	ā				ﾆ		ｵ	ｴ	ｵ	{! [9! . [9		[illegible]	[illegible]
Y9Ð! ☞[! / Y	[illegible]	! ☐[Y	D/ t	t [w	a ☐	ﾆ		ｵ	ā			ﾉ	ﾆ				ｵ	{! [9! . [9		[illegible]	[illegible]
Y9Ð! ☞[! / Y	[illegible]	! ☐[Y	D/ t	t [w	a ☐	ﾆ			ā			ﾉ	ﾆ				ｵ	{! [9! . [9		[illegible]	[illegible]
Y9Ð! ☞[! / Y	[illegible]	! ☐[Y	D/ t	t [w	a ☐	ﾆ	ｫ		ā	ﾇ	ｾ					ｴ		{! [9! . [9		[illegible]	[illegible]
Y9Ð! ☞[! / Y	[illegible]	! ☐[Y	D/ t	t [w	a ☐		ｫ		ā	ﾇ	ｾ	ﾉ					ｵ	{! [9! . [9		[illegible]	[illegible]
Y9Ð! ☞[! / Y	[illegible]	! ☐[Y	D/ t	t [w	a ☐		ｫ				ｾ						ｵ	{! [9! . [9		[illegible]	[illegible]
Y9Ð! ☞[! / Y	[illegible]	! ☐[Y	D/ t	t [w	a ☐			ｵ				ﾉ	ﾆ					{! [9! . [9		[illegible]	[illegible]
Y9Ð! ☞[! / Y	[illegible]	! ☐[Y	D/ t	t [w	a ☐	ﾆ						ﾉ	ﾆ				ｵ	{! [9! . [9		[illegible]	[illegible]
Y9Ð! ☞[! / Y	[illegible]	! ☐[Y	D/ t	t [w	a ☐		ｫ			ﾇ	ｾ	ﾉ	ﾆ			ｴ		{! [9! . [9		[illegible]	[illegible]
Y9Ð! ☞[! / Y	[illegible]	! ☐[Y	D/ t	t [w	a ☐		ｫ	ｵ		ﾇ	ｾ	ﾉ	ﾆ			ｴ		{! [9! . [9		[illegible]	[illegible]
Y9Ð! ☞[! / Y	[illegible]	! ☐[Y	D/ t	t [w	a ☐	ﾆ	ｫ		ā	ﾇ	ｾ	ﾉ				ｴ	ｵ	{! [9! . [9		[illegible]	[illegible]
Y9Ð! ☞[! / Y	[illegible]	! ☐[Y	D/ t	t [w	a ☐	ﾆ	ｫ		ā	ﾇ	ｾ	ﾉ	ﾆ		ｵ	ｴ	ｵ	{! [9! . [9		[illegible]	[illegible]
Y9Ð! ☞[! / Y	[illegible]	! ☐[Y	D/ t	t [w	a ☐	ﾆ	ｫ	ｵ	ā	ﾇ	ｾ	ﾉ				ｴ	ｵ	{! [9! . [9		[illegible]	[illegible]
Y9Ð! ☞[! / Y	[illegible]	! ☐[Y	D/ t	t [w	a ☐												ｵ	{! [9! . [9		[illegible]	[illegible]
Y9Ð! ☞[! / Y	[illegible]	! ☐[Y	D/ t	t [w	a ☐		ｫ	ｵ	ā									{! [9! . [9		[illegible]	[illegible]
Y9Ð! ☞[! / Y	[illegible]	! ☐[Y	D/ t	t [w	a ☐				ā	ﾇ			ﾆ		ｵ	ｴ	ｵ	{! [9! . [9		[illegible]	[illegible]
Y9Ð! ☞[! / Y	[illegible]	! ☐[Y	D/ t	t [w	a ☐	ﾆ									ｵ			{! [9! . [9		[illegible]	[illegible]
Y9Ð! ☞[! / Y	[illegible]	! ☐[Y	D/ t	t [w	a ☐							ﾉ	ﾆ				ｵ	{! [9! . [9		[illegible]	[illegible]
Y9Ð/ ¤5! w Dw[£	[illegible]	/ [5D	D/ t	t [w	a ☐			ｵ	ā				ﾆ					{! [9! . [9		[illegible]	[illegible]
Y9Ð! ☞[! / Y	[illegible]	! ☐[Y	D/ t	t [w	a ☐	ﾆ	ｫ					ﾉ	ﾆ		ｵ	ｴ	ｵ	{! [9! . [9		[illegible]	[illegible]
Y9Ð! ☞[! / Y	[illegible]	! ☐[Y	D/ t	t [w	a ☐					ﾇ		ﾉ	ﾆ			ｴ		{! [9! . [9		[illegible]	[illegible]
Y9Ð! ☞[! / Y	[illegible]	! ☐[Y	D/ t	t [w	a ☐	ﾆ	ｫ			ﾇ					ｵ		ｵ	{! [9! . [9		[illegible]	[illegible]
Y9Ð! ☞[! / Y	[illegible]	! ☐[Y	D/ t	t [w	a ☐					ﾇ								{! [9! . [9		[illegible]	[illegible]
Y9Ð! ☞[! / Y	[illegible]	! ☐[Y	D/ t	t [w	a ☐			ｵ	ā	ﾇ								{! [9! . [9		[illegible]	[illegible]
Y9Ð! ☞[! / Y	[illegible]	! ☐[Y	D/ t	t [w	a ☐	ﾆ	ｫ			ﾇ					ｵ	ｴ	ｵ	{! [9! . [9		[illegible]	[illegible]
Y9Ð! ☞[! / Y	[illegible]	! ☐[Y	D/ t	t [w	a ☐					ﾇ						ｴ		{! [9! . [9		[illegible]	[illegible]
Y9Ð! ☞[! / Y	[illegible]	! ☐[Y	D/ t	t [w	a ☐	ﾆ							ﾆ			ｴ		{! [9! . [9		[illegible]	[illegible]
Y9Ð! ☞[! / Y	[illegible]	! ☐[Y	D/ t	t [w	a ☐	ﾆ			ā	ﾇ	ｾ	ﾉ						{! [9! . [9		[illegible]	[illegible]
Y9Ð! ☞[! / Y	[illegible]	! ☐[Y	D/ t	t [w	a ☐	ﾆ			ā	ﾇ	ｾ	ﾉ	ﾆ			ｴ		{! [9! . [9		[illegible]	[illegible]
Y9Ð! ☞[! / Y	[illegible]	! ☐[Y	D/ t	t [w	a ☐	ﾆ	ｫ	ｵ	ā	ﾇ	ｾ	ﾉ	ﾆ			ｴ		{! [9! . [9		[illegible]	[illegible]
Y9Ð. ¤[ÐI ¤ Dw[£	[illegible]	. [ÐD	D/ t	t [w	a ☐	ﾆ					ｾ	ﾉ			ｵ	ｴ	ｵ	{! [9! . [9		[illegible]	[illegible]
Y9Ð. ¤[ÐI ¤ Dw[£	[illegible]	. [ÐD	D/ t	t [w	a ☐	ﾆ					ｾ	ﾉ	ﾆ		ｵ	ｴ	ｵ	{! [9! . [9		[illegible]	[illegible]
Y9Ð. ¤[ÐI ¤ Dw[£	[illegible]	. [ÐD	D/ t	t [w	a ☐	ﾆ				ﾇ	ｾ	ﾉ	ﾆ		ｵ	ｴ	ｵ	{! [9! . [9		[illegible]	[illegible]
Y9Ð! ☞[! / Y	[illegible]	! ☐[Y	D/ t	t [w	a ☐	ﾆ	ｫ			ﾇ		ﾉ	ﾆ		ｵ	ｴ	ｵ	{! [9! . [9		[illegible]	[illegible]
Y9Ð! ☞[! / Y	[illegible]	! ☐[Y	D/ t	t [w	a ☐							ﾉ				ｴ	ｵ	{! [9! . [9		[illegible]	[illegible]
Y9Ð! ☞[! / Y	[illegible]	! ☐[Y	D/ t	t [w	a ☐	ﾆ	ｫ	ｵ	ā	ﾇ	ｾ	ﾉ	ﾆ			ｴ	ｵ	{! [9! . [9		[illegible]	[illegible]
Y9Ð! ☞[! / Y	[illegible]	! ☐[Y	D/ t	t [w	a ☐			ｵ				ﾉ	ﾆ			ｴ	ｵ	{! [9! . [9		[illegible]	[illegible]
Y9Ð! ☞[! / Y	[illegible]	! ☐[Y	D/ t	t [w	a ☐	ﾆ	ｫ	ｵ	ā							ｴ	ｵ	{! [9! . [9		[illegible]	[illegible]
Y9Ð! ☞[! / Y	[illegible]	! ☐[Y	D/ t	t [w	a ☐	ﾆ		ｵ		ﾇ		ﾉ						{! [9! . [9		[illegible]	[illegible]
Y9Ð! ☞[! / Y	[illegible]	! ☐[Y	D/ t	t [w	a ☐		ｫ				ｾ	ﾉ	ﾆ					{! [9! . [9		[illegible]	[illegible]
Y9Ð! ☞[! / Y	[illegible]	! ☐[Y	D/ t	t [w	a ☐					ﾇ		ﾉ			ｵ	ｴ	ｵ	{! [9! . [9		[illegible]	[illegible]
Y9Ð! ☞[! / Y	[illegible]	! ☐[Y	D/ t	t [w	a ☐					ﾇ					ｵ	ｴ		{! [9! . [9		[illegible]	[illegible]
Y9Ð! ☞[! / Y	[illegible]	! ☐[Y	D/ t	t [w	a ☐	ﾆ	ｫ	ｵ	ā	ﾇ	ｾ		ﾆ		ｵ	ｴ		{! [9! . [9		[illegible]	[illegible]
Y9Ð! ☞[! / Y	[illegible]	! ☐[Y	D/ t	t [w	a ☐	ﾆ	ｫ	ｵ	ā		ｾ	ﾉ	ﾆ				ｵ	{! [9! . [9		[illegible]	[illegible]
Y9Ð! ☞[! / Y	[illegible]	! ☐[Y	D/ t	t [w	a ☐							ﾉ					ｵ	{! [9! . [9		[illegible]	[illegible]
Y9Ð! ☞[! / Y	[illegible]	! ☐[Y	D/ t	t [w	a ☐	ﾆ	ｫ		ā	ﾇ	ｾ	ﾉ	ﾆ				ｵ	{! [9! . [9		[illegible]	[illegible]
Y9Ð! ☞[! / Y	[illegible]	! ☐[Y	D/ t	t [w	a ☐			ｵ							ｵ	ｴ		{! [9! . [9		[illegible]	[illegible]
Y9Ð! ☞[! / Y	[illegible]	! ☐[Y	D/ t	t [w	a ☐		ｫ			ﾇ		ﾉ			ｵ			{! [9! . [9		[illegible]	[illegible]
Y9Ð! ☞[! / Y	[illegible]	! ☐[Y	D/ t	t [w	a ☐				ā			ﾉ						{! [9! . [9		[illegible]	[illegible]
Y9Ð! ☞[! / Y	[illegible]	! ☐[Y	D/ t	t [w	a ☐				ā		ｾ	ﾉ						{! [9! . [9		[illegible]	[illegible]
Y9Ð! ☞[! / Y	[illegible]	! ☐[Y	D/ t	t [w	a ☐						ｾ	ﾉ	ﾆ					{! [9! . [9		[illegible]	[illegible]
Y9Ð! ☞[! / Y	[illegible]	! ☐[Y	D/ t	t [w	a ☐		ｫ	ｵ	ā	ﾇ	ｾ		ﾆ		ｵ	ｴ	ｵ	{! [9! . [9		[illegible]	[illegible]
Y9Ð. ¤[ÐI ¤ Dw[£	[illegible]	. [ÐD	D/ t	t [w	a ☐					ﾇ			ﾆ		ｵ	ｴ	ｵ	{! [9! . [9		[illegible]	[illegible]
Y9Ð! ☞[! / Y	[illegible]	! ☐[Y	D/ t	t [w	a ☐								ﾆ				ｵ	{! [9! . [9		[illegible]	[illegible]
Y9Ð! ☞[! / Y	[illegible]	! ☐[Y	D/ t	t [w	a ☐	ﾆ	ｫ		ā	ﾇ	ｾ		ﾆ					{! [9! . [9		[illegible]	[illegible]
Y9Ð! ¤Ð9[[h°	[illegible]	! ÐI	D/ t	t [w	a ☐						ｾ	ﾉ	ﾆ		ｵ	ｴ	ｵ	{! [9! . [9		[illegible]	[illegible]
Y9Ð! ☞[! / Y	[illegible]	! ☐[Y	D/ t	t [w	a ☐				ā	ﾇ		ﾉ	ﾆ			ｴ	ｵ	{! [9! . [9		[illegible]	[illegible]
Y9Ð! ☞[! / Y	[illegible]	! ☐[Y	D/ t	t [w	a ☐							ﾉ	ﾆ			ｴ	ｵ	{! [9! . [9		[illegible]	[illegible]
Y9Ð! ☞[! / Y	[illegible]	! ☐[Y	D/ t	t [w	a ☐								ﾆ			ｴ	ｵ	{! [9! . [9		[illegible]	[illegible]
Y9Ð. ¤[ÐI ¤ Dw[£	[illegible]	. [ÐD	D/ t	t [w	a ☐	ﾆ		ｵ		ﾇ	ｾ	ﾉ			ｵ	ｴ	ｵ	{! [9! . [9		[illegible]	[illegible]
Y9Ð! ☞[! / Y	[illegible]	! ☐[Y	D/ t	t [w	a ☐	ﾆ		ｵ									ｵ	{! [9! . [9		[illegible]	[illegible]
Y9Ð! ☞[! / Y	[illegible]	! ☐[Y	D/ t	t [w	a ☐	ﾆ	ｫ		ā	ﾇ	ｾ	ﾉ	ﾆ					{! [9! . [9		[illegible]	[illegible]
Y9Ð. ¤[ÐI ¤ Dw[£	[illegible]	. [ÐD	D/ t	t [w	a ☐								ﾆ					{! [9! . [9		[illegible]	[illegible]
Y9Ð. ¤[ÐI ¤ Dw[£	[illegible]	. [ÐD	D/ t	t [w	a ☐											ｴ		{! [9! . [9		[illegible]	[illegible]
Y9Ð. ¤[ÐI ¤ Dw[£	[illegible]	. [ÐD	D/ t	t [w	a ☐		ｫ	ｵ	ā	ﾇ		ﾉ	ﾆ			ｴ		{! [9! . [9		[illegible]	[illegible]
Y9Ð. ¤[ÐI ¤ Dw[£	[illegible]	. [ÐD	D/ t	t [w	a ☐							ﾉ				ｴ	ｵ	{! [9! . [9		[illegible]	[illegible]
Y9Ð. ¤[ÐI ¤ Dw[£	[illegible]	. [ÐD	D/ t	t [w	a ☐	ﾆ	ｫ	ｵ				ﾉ	ﾆ				ｵ	{! [9! . [9		[illegible]	[illegible]
Y9Ð. ¤[ÐI ¤ Dw[£	[illegible]	. [ÐD	D/ t	t [w	a ☐	ﾆ	ｫ	ｵ	ā	ﾇ		ﾉ				ｴ	ｵ	{! [9! . [9		[illegible]	[illegible]
Y9Ð! ☞[! / Y	[illegible]	! ☐[Y	D/ t	t [w	a ☐	ﾆ	ｫ	ｵ	ā	ﾇ								{! [9! . [9		[illegible]	[illegible]
Y9Ð! ☞[! / Y	[illegible]	! ☐[Y	D/ t	t [w	a ☐	ﾆ					ｾ	ﾉ	ﾆ		ｵ	ｴ	ｵ	{! [9! . [9		[illegible]	[illegible]
Y9Ð. ¤[ÐI ¤ Dw[£	[illegible]	. [ÐD	D/ t	t [w	a ☐			ｵ				ﾉ						{! [9! . [9		[illegible]	[illegible]

molex

a AE⊠ƒ\hdE; [! 59{9! [95 ! {{Ða ! ¤{9! [
. ha ! b5 tlb h- ¤{I 99¤

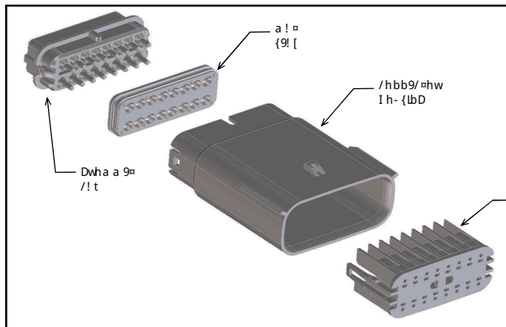

Chw! 55¤lhb! [lbChwa ! ¤lhb {99 {5□ｵｶｷｸｹｺ

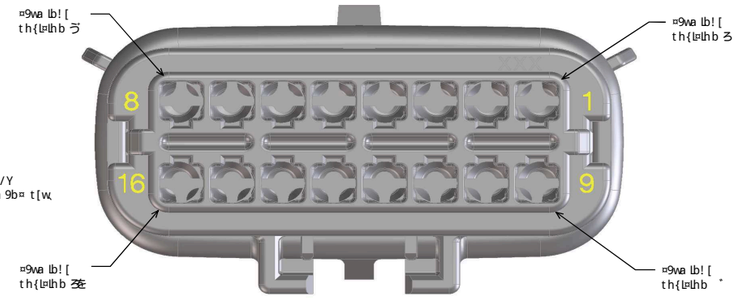

! . . w9¦ Ll ¤lhb	59{/wLt ¤lhb	/h[hw	a ! ¤9wLt [
! □[Y	I h- {lbD¤¥9ElbD ht ¤lhb !	. [! / Y	{t{ .lb E[hb DC ｵｷ
. □D	I h- {lbD¤¥9ElbD ht ¤lhb .	[LDl ¤ Dwl E	{t{ .lb E[hb DC ｵｷ
/ □.w	I h- {lbD¤¥9ElbD ht ¤lhb /	. wh° b	{t{ .lb E[hb DC ｵｷ
5 □Dw	I h- {lbD¤¥9ElbD ht ¤lhb 5	Dw99b	{t{ .lb E[hb DC ｵｷ
/ □5D	I h- {lbD¤¥9ElbD ht ¤lhb /	5! wl Dwl E	{t{ .lb E[hb DC ｵｷ
5 □[D	I h- {lbD¤¥9ElbD ht ¤lhb 5	{¤hb9 Dwl E	{t{ .lb E[hb DC ｵｷ
! □Ð	I h- {lbD¤¥9ElbD ht ¤lhb !	Ð9[[h°	{t{ .lb E[hb DC ｵｷ
D/t	Dwha a 9¤/! t t[- DD95、	. [! / Y	{t{ .lb E[hb DC ｵｷ
t[w	t[w	b! ¤- wl [	{t{ .lb E[hb DC ｵｷ
a w	a ! ¤{9! [	w- {¤w95	lbI 9w8b¤[Ð[- . wL/ ! ¤95 {l[L/ hb9
a □	a ! ¤{9! [	whÐ[. [- 9	lbI 9w8b¤[Ð[- . wL/ ! ¤95 {l[L/ hb9

! {{9a . [Ð59{/wLt ¤lhb	! {{9a . [Ðt! w¤ b- a . 9w	/ha thb9b¤				. [h/Y95 ¤9wa lb! [{												{¤! ¤- {	/ha a 9b¤{	ht ¤lhb! [! ¤¤! ¤/I a 9b¤{ {h[5 {9t 9wl ¤9{Ð			
		¤I 9 tw8{9b/9 hC! b ! . . w9¦ Ll ¤lhb lb5l/! ¤9{ ¤I 9 tw8{9b/9 hC¤I ! ¤/ha thb9b¤☆				/! ! ⊔Ð° ⊔I h- ¤! b- a . 9wlb5l/! ¤9{ hl 9b ¤9wa lb! [th{¤lhb /! ! ⊔Ð° ⊔I h- ¤! b- a . 9wlb5l/! ¤9{ . [h/Y95 ¤9wa lb! [th{¤lhb																
		I h- {lbD Y9Ð.wl h[hw	Dwha a 9¤ /! t	t[w	a ! ¤{9! [	ろ	わ	わ	ゐ	ゑ	を	ん	う	゛	ゔゕ	ゔゖ	ゔろ	ゔわ	ゔゐ	ゔゑ	ゔを					
Y9Ð! ｷ[! / Y	ｵｶｷｸｹｺ	! □[Y	D/t	t[w	a w																	t[! bb95 h . {h[9(/9b/9	{99 ｵｶｷｸｹｺ	ｵゐ ｽｲ□ｾｿ	ｵゐ ｽｲ□ｾｿ	ｵゐ ｽｲ□ｾｿ	ｵゐ ｽｲ□ｾｿ
Y9Ð. ｷ[lDl ¤ Dwl E	ｵｶｷｸｹｻ	. □D	D/t	t[w	a w																	t[! bb95 h . {h[9(/9b/9	{99 ｵｶｷｸｹｻ	ｵゐ ｽｲ□ｾｿ	ｵゐ ｽｲ□ｾｿ	ｵゐ ｽｲ□ｾｿ	ｵゐ ｽｲ□ｾｿ
Y9Ð/ ｷ wh° b	ｵｶｷｸｹｼ	/ □.w	D/t	t[w	a w																	t[! bb95 h . {h[9(/9b/9	{99 ｵｶｷｸｹｼ	ｵゐ ｽｲ□ｾｿ	ｵゐ ｽｲ□ｾｿ	ｵゐ ｽｲ□ｾｿ	ｵゐ ｽｲ□ｾｿ
Y9Ð5 ¤Ðw99b	ｵｶｷｸｹｽ	5 □Dw	D/t	t[w	a w																	t[! bb95 h . {h[9(/9b/9	{99 ｵｶｷｸｹｽ	ｵゐ ｽｲ□ｾｿ	ｵゐ ｽｲ□ｾｿ	ｵゐ ｽｲ□ｾｿ	ｵゐ ｽｲ□ｾｿ
¹ hl5 Y9E	ｵｶｷｸｹｾ																									
Y9Ð! ｷ[! / Y	ｵｶｷｸｹｿ	! □[Y	D/t	t[w	a w																	t[! bb95 h . {h[9(/9b/9	{99 ｵｶｷｸｹｿ	ｵゐ ｽｲ□ｾｿ	ｵゐ ｽｲ□ｾｿ	ｵゐ ｽｲ□ｾｿ	ｵゐ ｽｲ□ｾｿ
Y9Ð. ｷ[lDl ¤ Dwl E	ｵｶｸ｀	. □D	D/t	t[w	a w																	t[! bb95 h . {h[9(/9b/9	{99 ｵｶｸ｀	ｵゐ ｽｲ□ｾｿ	ｵゐ ｽｲ□ｾｿ	ｵゐ ｽｲ□ｾｿ	ｵゐ ｽｲ□ｾｿ
Y9Ð/ ｷ wh° b	ｵｶｸａ	/ □.w	D/t	t[w	a w																	t[! bb95 h . {h[9(/9b/9	{99 ｵｶｸａ	ｵゐ ｽｲ□ｾｿ	ｵゐ ｽｲ□ｾｿ	ｵゐ ｽｲ□ｾｿ	ｵゐ ｽｲ□ｾｿ
Y9Ð5 ¤Ðw99b	ｵｶｸｂ	5 □Dw	D/t	t[w	a w																	t[! bb95 h . {h[9(/9b/9	{99 ｵｶｸｂ	ｵゐ ｽｲ□ｾｿ	ｵゐ ｽｲ□ｾｿ	ｵゐ ｽｲ□ｾｿ	ｵゐ ｽｲ□ｾｿ
¹ hl5 Y9E	ｵｶｸｃ																									
Y9Ð! ｷ[! / Y	ｵｶｸｄ	! □[Y	D/t	t[w	a w	ろ																t[! bb95 h . {h[9(/9b/9	{99 ｵｶｸｄ	ｵゐ ｽｲ□ｾｿ	ｵゐ ｽｲ□ｾｿ	ｵゐ ｽｲ□ｾｿ	ｵゐ ｽｲ□ｾｿ
Y9Ð. ｷ[lDl ¤ Dwl E	ｵｶｸｅ	. □D	D/t	t[w	a w	ろ																t[! bb95 h . {h[9(/9b/9	{99 ｵｶｸｅ	ｵゐ ｽｲ□ｾｿ	ｵゐ ｽｲ□ｾｿ	ｵゐ ｽｲ□ｾｿ	ｵゐ ｽｲ□ｾｿ
Y9Ð/ ｷ wh° b	ｵｶｸｆ	/ □.w	D/t	t[w	a w	ろ																t[! bb95 h . {h[9(/9b/9	{99 ｵｶｸｆ	ｵゐ ｽｲ□ｾｿ	ｵゐ ｽｲ□ｾｿ	ｵゐ ｽｲ□ｾｿ	ｵゐ ｽｲ□ｾｿ
Y9Ð5 ¤Ðw99b	ｵｶｸｇ	5 □Dw	D/t	t[w	a w	ろ																t[! bb95 h . {h[9(/9b/9	{99 ｵｶｸｇ	ｵゐ ｽｲ□ｾｿ	ｵゐ ｽｲ□ｾｿ	ｵゐ ｽｲ□ｾｿ	ｵゐ ｽｲ□ｾｿ
¹ hl5 Y9E	ｵｶｸｈ																									
Y9Ð! ｷ[! / Y	ｵｶｸｉ	! □[Y	D/t	t[w	a w																	t[! bb95 h . {h[9(/9b/9	{99 ｵｶｸｉ	ｵゐ ｽｲ□ｾｿ	ｵゐ ｽｲ□ｾｿ	ｵゐ ｽｲ□ｾｿ	ｵゐ ｽｲ□ｾｿ
Y9Ð. ｷ[lDl ¤ Dwl E	ｵｶｸｊ	. □D	D/t	t[w	a w																	t[! bb95 h . {h[9(/9b/9	{99 ｵｶｸｊ	ｵゐ ｽｲ□ｾｿ	ｵゐ ｽｲ□ｾｿ	ｵゐ ｽｲ□ｾｿ	ｵゐ ｽｲ□ｾｿ
Y9Ð/ ｷ wh° b	ｵｶｸｋ	/ □.w	D/t	t[w	a w																	t[! bb95 h . {h[9(/9b/9	{99 ｵｶｸｋ	ｵゐ ｽｲ□ｾｿ	ｵゐ ｽｲ□ｾｿ	ｵゐ ｽｲ□ｾｿ	ｵゐ ｽｲ□ｾｿ
Y9Ð5 ¤Ðw99b	ｵｶｸｌ	5 □Dw	D/t	t[w	a w																	t[! bb95 h . {h[9(/9b/9	{99 ｵｶｸｌ	ｵゐ ｽｲ□ｾｿ	ｵゐ ｽｲ□ｾｿ	ｵゐ ｽｲ□ｾｿ	ｵゐ ｽｲ□ｾｿ
¹ hl5 Y9E	ｵｶｸｍ																									
Y9Ð! ｷ[! / Y	ｵｶｸｎ	! □[Y	D/t	t[w	a w																	t[! bb95 h . {h[9(/9b/9	{99 ｵｶｸｎ	ｵゐ ｽｲ□ｾｿ	ｵゐ ｽｲ□ｾｿ	ｵゐ ｽｲ□ｾｿ	ｵゐ ｽｲ□ｾｿ
Y9Ð! ｷ[! / Y	ｵｶｸｏ	! □[Y	D/t	t[w	a w																	t[! bb95 h . {h[9(/9b/9	{99 ｵｶｸｏ	ｵゐ ｽｲ□ｾｿ	ｵゐ ｽｲ□ｾｿ	ｵゐ ｽｲ□ｾｿ	ｵゐ ｽｲ□ｾｿ
Y9Ð. ｷ[lDl ¤ Dwl E	ｵｶｸｐ	. □D	D/t	t[w	a w																	t[! bb95 h . {h[9(/9b/9	{99 ｵｶｸｐ	ｵゐ ｽｲ□ｾｿ	ｵゐ ｽｲ□ｾｿ	ｵゐ ｽｲ□ｾｿ	ｵゐ ｽｲ□ｾｿ
Y9Ð. ｷ[lDl ¤ Dwl E	ｵｶｸｑ	. □D	D/t	t[w	a w																	t[! bb95 h . {h[9(/9b/9	{99 ｵｶｸｑ	ｵゐ ｽｲ□ｾｿ	ｵゐ ｽｲ□ｾｿ	ｵゐ ｽｲ□ｾｿ	ｵゐ ｽｲ□ｾｿ
Y9Ð. ｷ[lDl ¤ Dwl E	ｵｶｸｒ	. □D	D/t	t[w	a w																	t[! bb95 h . {h[9(/9b/9	{99 ｵｶｸｒ	ｵゐ ｽｲ□ｾｿ	ｵゐ ｽｲ□ｾｿ	ｵゐ ｽｲ□ｾｿ	ｵゐ ｽｲ□ｾｿ
Y9Ð! ｷ[! / Y	ｵｶｸｓ	! □[Y	D/t	t[w	a w																	t[! bb95 h . {h[9(/9b/9	{99 ｵｶｸｓ	ｵゐ ｽｲ□ｾｿ	ｵゐ ｽｲ□ｾｿ	ｵゐ ｽｲ□ｾｿ	ｵゐ ｽｲ□ｾｿ
Y9Ð. ｷ[lDl ¤ Dwl E	ｵｶｸｔ	. □D	D/t	t[w	a w																	t[! bb95 h . {h[9(/9b/9	{99 ｵｶｸｔ	ｵゐ ｽｲ□ｾｿ	ｵゐ ｽｲ□ｾｿ	ｵゐ ｽｲ□ｾｿ	ｵゐ ｽｲ□ｾｿ
Y9Ð. ｷ[lDl ¤ Dwl E	ｵｶｸｕ	. □D	D/t	t[w	a w																	t[! bb95 h . {h[9(/9b/9	{99 ｵｶｸｕ	ｵゐ ｽｲ□ｾｿ	ｵゐ ｽｲ□ｾｿ	ｵゐ ｽｲ□ｾｿ	ｵゐ ｽｲ□ｾｿ
Y9Ð! ｷ[! / Y	ｵｶｸｖ	! □[Y	D/t	t[w	a w																	t[! bb95 h . {h[9(/9b/9	{99 ｵｶｸｖ	ｵゐ ｽｲ□ｾｿ	ｵゐ ｽｲ□ｾｿ	ｵゐ ｽｲ□ｾｿ	ｵゐ ｽｲ□ｾｿ
Y9Ð. ｷ[lDl ¤ Dwl E	ｵｶｸｗ	. □D	D/t	t[w	a w																	t[! bb95 h . {h[9(/9b/9	{99 ｵｶｸｗ	ｵゐ ｽｲ□ｾｿ	ｵゐ ｽｲ□ｾｿ	ｵゐ ｽｲ□ｾｿ	ｵゐ ｽｲ□ｾｿ
Y9Ð. ｷ[lDl ¤ Dwl E	ｵｶｸｘ	. □D	D/t	t[w	a w																	t[! bb95 h . {h[9(/9b/9	{99 ｵｶｸｘ	ｵゐ ｽｲ□ｾｿ	ｵゐ ｽｲ□ｾｿ	ｵゐ ｽｲ□ｾｿ	ｵゐ ｽｲ□ｾｿ
Y9Ð. ｷ[lDl ¤ Dwl E	ｵｶｸｙ	. □D	D/t	t[w	a w																	t[! bb95 h . {h[9(/9b/9	{99 ｵｶｸｙ	ｵゐ ｽｲ□ｾｿ	ｵゐ ｽｲ□ｾｿ	ｵゐ ｽｲ□ｾｿ	ｵゐ ｽｲ□ｾｿ
Y9Ð! ｷ[! / Y	ｵｶｸｚ	! □[Y	D/t	t[w	a w																	t[! bb95 h . {h[9(/9b/9	{99 ｵｶｸｚ	ｵゐ ｽｲ□ｾｿ	ｵゐ ｽｲ□ｾｿ	ｵゐ ｽｲ□ｾｿ	ｵゐ ｽｲ□ｾｿ
Y9Ð. ｷ[lDl ¤ Dwl E	ｵｶｹ｀	. □D	D/t	t[w	a w																	t[! bb95 h . {h[9(/9b/9	{99 ｵｶｹ｀	ｵゐ ｽｲ□ｾｿ	ｵゐ ｽｲ□ｾｿ	ｵゐ ｽｲ□ｾｿ	ｵゐ ｽｲ□ｾｿ
Y9Ð! ｷ[! / Y	ｵｶｹａ	! □[Y	D/t	t[w	a w																	t[! bb95 h . {h[9(/9b/9	{99 ｵｶｹａ	ｵゐ ｽｲ□ｾｿ	ｵゐ ｽｲ□ｾｿ	ｵゐ ｽｲ□ｾｿ	ｵゐ ｽｲ□ｾｿ
Y9Ð. ｷ[lDl ¤ Dwl E	ｵｶｹｂ	. □D	D/t	t[w	a w																	t[! bb95 h . {h[9(/9b/9	{99 ｵｶｹｂ	ｵゐ ｽｲ□ｾｿ	ｵゐ ｽｲ□ｾｿ	ｵゐ ｽｲ□ｾｿ	ｵゐ ｽｲ□ｾｿ
Y9Ð! ｷ[! / Y	ｵｶｹｃ	! □[Y	D/t	t[w	a w																	t[! bb95 h . {h[9(/9b/9	{99 ｵｶｹｃ	ｵゐ ｽｲ□ｾｿ	ｵゐ ｽｲ□ｾｿ	ｵゐ ｽｲ□ｾｿ	ｵゐ ｽｲ□ｾｿ
Y9Ð. ｷ[lDl ¤ Dwl E	ｵｶｹｄ	. □D	D/t	t[w	a w																	t[! bb95 h . {h[9(/9b/9	{99 ｵｶｹｄ	ｵゐ ｽｲ□ｾｿ	ｵゐ ｽｲ□ｾｿ	ｵゐ ｽｲ□ｾｿ	ｵゐ ｽｲ□ｾｿ
Y9Ð! ｷ[! / Y	ｵｶｹｅ	! □[Y	D/t	t[w	a w																	t[! bb95 h . {h[9(/9b/9	{99 ｵｶｹｅ	ｵゐ ｽｲ□ｾｿ	ｵゐ ｽｲ□ｾｿ	ｵゐ ｽｲ□ｾｿ	ｵゐ ｽｲ□ｾｿ
Y9Ð. ｷ[lDl ¤ Dwl E	ｵｶｹｆ	. □D	D/t	t[w	a w																	t[! bb95 h . {h[9(/9b/9	{99 ｵｶｹｆ	ｵゐ ｽｲ□ｾｿ	ｵゐ ｽｲ□ｾｿ	ｵゐ ｽｲ□ｾｿ	ｵゐ ｽｲ□ｾｿ
Y9Ð! ｷ[! / Y	ｵｶｹｇ	! □[Y	D/t	t[w	a w																	t[! bb95 h . {h[9(/9b/9	{99 ｵｶｹｇ	ｵゐ ｽｲ□ｾｿ	ｵゐ ｽｲ□ｾｿ	ｵゐ ｽｲ□ｾｿ	ｵゐ ｽｲ□ｾｿ
Y9Ð! ｷ[! / Y	ｵｶｹｈ	! □[Y	D/t	t[w	a w																	t[! bb95 h . {h[9(/9b/9	{99 ｵｶｹｈ	ｵゐ ｽｲ□ｾｿ	ｵゐ ｽｲ□ｾｿ	ｵゐ ｽｲ□ｾｿ	ｵゐ ｽｲ□ｾｿ
Y9Ð! ｷ[! / Y	ｵｶｹｉ	! □[Y	D/t	t[w	a w																	t[! bb95 h . {h[9(/9b/9	{99 ｵｶｹｉ	ｵゐ ｽｲ□ｾｿ	ｵゐ ｽｲ□ｾｿ	ｵゐ ｽｲ□ｾｿ	ｵゐ ｽｲ□ｾｿ
Y9Ð! ｷ[! / Y	ｵｶｹｊ	! □[Y	D/t	t[w	a w																	t[! bb95 h . {h[9(/9b/9	{99 ｵｶｹｊ	ｵゐ ｽｲ□ｾｿ	ｵゐ ｽｲ□ｾｿ	ｵゐ ｽｲ□ｾｿ	ｵゐ ｽｲ□ｾｿ
Y9Ð! ｷ[! / Y	ｵｶｹｋ	! □[Y	D/t	t[w	a w																	t[! bb95 h . {h[9(/9b/9	{99 ｵｶｹｋ	ｵゐ ｽｲ□ｾｿ	ｵゐ ｽｲ□ｾｿ	ｵゐ ｽｲ□ｾｿ	ｵゐ ｽｲ□ｾｿ

molex

molex

a ÆƷ亦れゎÆ う. [! 5 9 { 9! [95 ! { {Ða ! ¤ { 9! [

. ha ! b5 t Ŀb h- ¤ { I 99¤

a Æ3ゐれゎÆゔ [! 59{9! [95 ! {{Đa ! ¤{9! [
. ha ! b5 t lb h- ¤{I 99¤

! {{9a . [Đ59(/wLt¤Lhb	! {{9a . [Đt! w¤ b- a . 9w	/ha thb9b¤				. [h/Y95 ¤9wa lb! [{																{¤! ¤- {	/ha a 9b¤{	ht¤Lhb! [! ¤¤! ¤/I a 9b¤{ {h[5 {9t 9wL ¤9[Đ			
		¤I 9tw9(9b/9hC! b! . . w9¹ L! ¤Lhb lb5L/! ¤9(¤I 9 tw9(9b/9hC¤I ! ¤/ha thb9b¤				/! ¹ L¤Đ° L¤I ! b- a . 9wLb5L/! ¤9(. [h/Y95 ¤9wa lb! [th{L¤Lhb /! ¹ L¤Đ° L¤I h- ¤! b- a . 9wLb5L/! ¤9(ht9b ¤9wa lb! [th{L¤Lhb																					
		I h- {lbD Y9ĐL/h[hw	Dwha a 9¤ /! t	t[w	a ! ¤{9! [	ろ	ゎ	わ	ゐ	ゑ	を	ん	ゔ	゛	ゐれ	ゐろ	ゐゎ	ゐわ	ゐゐ	ゐゑ	ゐを			. ! /Y{I 9[[° L¤I wL {	. ! /Y{I 9[[° L¤I h- ¤wL {	れ! 5! t¤hw° L¤I wL {	れ! 5! t¤hw° L¤I h- ¤ wL {
Y9D! ¤c[! /Y	[illegible]	! ⊡[Y	D/t	t[w	a ⊠	ﾐ	ｷ		∂		ﾓ	ｈ	ﾆ		ｵ		ｵ					t[! bb95 h. {h[9(/9b/9	{99 [illegible]	[illegible]	[illegible]	[illegible]	[illegible]
Y9D! ¤c[! /Y	[illegible]	! ⊡[Y	D/t	t[w	a ⊠	ﾐ	ｷ	ｷ	∂		ﾓ	ｈ	ﾆ		ｵ			ｵ	ﾖ		ﾖ	t[! bb95 h. {h[9(/9b/9	{99 [illegible]	[illegible]	[illegible]	[illegible]	[illegible]
Y9D! ¤c[! /Y	[illegible]	! ⊡[Y	D/t	t[w	a ⊠		ｷ			ゑ		ｈ			ｵ	ﾖ	ｵ	ｵ	ﾖ		ﾖ	t[! bb95 h. {h[9(/9b/9	{99 [illegible]	[illegible]	[illegible]	[illegible]	[illegible]
Y9D! ¤c[! /Y	[illegible]	! ⊡[Y	D/t	t[w	a ⊠										ｵ	ﾖ	ｵ	ｵ			ﾖ	t[! bb95 h. {h[9(/9b/9	{99 [illegible]	[illegible]	[illegible]	[illegible]	[illegible]
Y9D! ¤c[! /Y	[illegible]	! ⊡[Y	D/t	t[w	a ⊠	ﾐ	ｷ	ｷ		ゑ	ﾓ	ｈ	ﾆ		ｵ	ﾖ		ｵ	ﾖ	ﾖ	ﾖ	t[! bb95 h. {h[9(/9b/9	{99 [illegible]	[illegible]	[illegible]	[illegible]	[illegible]
Y9D! ¤c[! /Y	[illegible]	! ⊡[Y	D/t	t[w	a ⊠	ﾐ	ｷ	ｷ		ゑ	ﾓ	ｈ	ﾆ			ﾖ		ｵ	ﾖ	ﾖ	ﾖ	t[! bb95 h. {h[9(/9b/9	{99 [illegible]	[illegible]	[illegible]	[illegible]	[illegible]
Y9D! ¤c[! /Y	[illegible]	! ⊡[Y	D/t	t[w	a ⊠							ｈ	ﾆ					ｵ			ﾖ	t[! bb95 h. {h[9(/9b/9	{99 [illegible]	[illegible]	[illegible]	[illegible]	[illegible]
Y9D! ¤c[! /Y	[illegible]	! ⊡[Y	D/t	t[w	a ⊠							ｈ	ﾆ					ｵ			ﾖ	t[! bb95 h. {h[9(/9b/9	{99 [illegible]	[illegible]	[illegible]	[illegible]	[illegible]
Y9D! ¤c[! /Y	[illegible]	! ⊡[Y	D/t	t[w	a ⊠							ｈ	ﾆ		ｵ	ﾖ	ｵ	ｵ	ﾖ			t[! bb95 h. {h[9(/9b/9	{99 [illegible]	[illegible]	[illegible]	[illegible]	[illegible]
Y9D! ¤c[! /Y	[illegible]	! ⊡[Y	D/t	t[w	a ⊠						ﾓ					ﾖ	ｵ	ｵ	ﾖ			t[! bb95 h. {h[9(/9b/9	{99 [illegible]	[illegible]	[illegible]	[illegible]	[illegible]
Y9D! ¤c[! /Y	[illegible]	! ⊡[Y	D/t	t[w	a ⊠	ﾐ	ｷ	ｷ	∂	ゑ	ﾓ	ｈ	ﾆ		ｵ	ﾖ	ｵ	ｵ	ﾖ	ﾖ		t[! bb95 h. {h[9(/9b/9	{99 [illegible]	[illegible]	[illegible]	[illegible]	[illegible]
Y9D! ¤c[! /Y	[illegible]	! ⊡[Y	D/t	t[w	a ⊠	ﾐ	ｷ	ｷ	∂	ゑ	ﾓ	ｈ	ﾆ		ｵ	ﾖ				ﾖ	ﾖ	t[! bb95 h. {h[9(/9b/9	{99 [illegible]	[illegible]	[illegible]	[illegible]	[illegible]
Y9D! ¤c[! /Y	[illegible]	! ⊡[Y	D/t	t[w	a ⊠			ｷ			ﾓ											t[! bb95 h. {h[9(/9b/9	{99 [illegible]	[illegible]	[illegible]	[illegible]	[illegible]
Y9D. ¤[DI ¤DwI £	[illegible]	. [D	D/t	t[w	a ⊠						ﾓ							ｵ	ﾖ	ﾖ	ﾖ	t[! bb95 h. {h[9(/9b/9	{99 [illegible]	[illegible]	[illegible]	[illegible]	[illegible]
Y9D. ¤[DI ¤DwI £	[illegible]	. [D	D/t	t[w	a ⊠					ゑ								ｵ	ﾖ	ﾖ	ﾖ	t[! bb95 h. {h[9(/9b/9	{99 [illegible]	[illegible]	[illegible]	[illegible]	[illegible]
Y9D! ¤c[! /Y	[illegible]	! ⊡[Y	D/t	t[w	a ⊠			ｷ	∂											ﾖ	ﾖ	t[! bb95 h. {h[9(/9b/9	{99 [illegible]	[illegible]	[illegible]	[illegible]	[illegible]
Y9D! ¤c[! /Y	[illegible]	! ⊡[Y	D/t	t[w	a ⊠										ｵ	ﾖ		ｵ			ﾖ	t[! bb95 h. {h[9(/9b/9	{99 [illegible]	[illegible]	[illegible]	[illegible]	[illegible]
Y9D! ¤c[! /Y	[illegible]	! ⊡[Y	D/t	t[w	a ⊠		ｷ					ｈ	ﾆ					ｵ	ﾖ	ﾖ	ﾖ	t[! bb95 h. {h[9(/9b/9	{99 [illegible]	[illegible]	[illegible]	[illegible]	[illegible]
Y9D! ¤c[! /Y	[illegible]	! ⊡[Y	D/t	t[w	a ⊠						ﾓ				ｵ	ﾖ	ｵ					t[! bb95 h. {h[9(/9b/9	{99 [illegible]	[illegible]	[illegible]	[illegible]	[illegible]
Y9D! ¤c[! /Y	[illegible]	! ⊡[Y	D/t	t[w	a ⊠	ﾐ	ｷ	ｷ	∂	ゑ	ﾓ											t[! bb95 h. {h[9(/9b/9	{99 [illegible]	[illegible]	[illegible]	[illegible]	[illegible]
Y9D! ¤c[! /Y	[illegible]	! ⊡[Y	D/t	t[w	a ⊠		ｷ			ゑ							ｵ	ｵ				t[! bb95 h. {h[9(/9b/9	{99 [illegible]	[illegible]	[illegible]	[illegible]	[illegible]
Y9D! ¤c[! /Y	[illegible]	! ⊡[Y	D/t	t[w	a ⊠		ｷ					ｈ			ｵ	ﾖ	ｵ	ｵ	ﾖ		ﾖ	t[! bb95 h. {h[9(/9b/9	{99 [illegible]	[illegible]	[illegible]	[illegible]	[illegible]
Y9D! ¤c[! /Y	[illegible]	! ⊡[Y	D/t	t[w	a ⊠	ﾐ	ｷ	ｷ	∂	ゑ		ｈ	ﾆ									t[! bb95 h. {h[9(/9b/9	{99 [illegible]	[illegible]	[illegible]	[illegible]	[illegible]
Y9D! ¤c[! /Y	[illegible]	! ⊡[Y	D/t	t[w	a ⊠							ｈ	ﾆ			ﾖ	ｵ		ﾖ	ﾖ	ﾖ	t[! bb95 h. {h[9(/9b/9	{99 [illegible]	[illegible]	[illegible]	[illegible]	[illegible]
Y9D! ¤c[! /Y	[illegible]	! ⊡[Y	D/t	t[w	a ⊠	ﾐ	ｷ															t[! bb95 h. {h[9(/9b/9	{99 [illegible]	[illegible]	[illegible]	[illegible]	[illegible]
Y9D! ¤c[! /Y	[illegible]	! ⊡[Y	D/t	t[w	a ⊠			ｷ			ﾓ				ｵ	ﾖ	ｵ	ｵ	ﾖ	ﾖ	ﾖ	t[! bb95 h. {h[9(/9b/9	{99 [illegible]	[illegible]	[illegible]	[illegible]	[illegible]
Y9D! ¤c[! /Y	[illegible]	! ⊡[Y	D/t	t[w	a ⊠						ﾓ		ﾆ							ﾖ	ﾖ	t[! bb95 h. {h[9(/9b/9	{99 [illegible]	[illegible]	[illegible]	[illegible]	[illegible]
Y9D! ¤c[! /Y	[illegible]	! ⊡[Y	D/t	t[w	a ⊠						ﾓ		ﾆ		ｵ	ﾖ	ｵ			ﾖ	ﾖ	t[! bb95 h. {h[9(/9b/9	{99 [illegible]	[illegible]	[illegible]	[illegible]	[illegible]
Y9D! ¤c[! /Y	[illegible]	! ⊡[Y	D/t	t[w	a ⊠			ｷ	∂		ﾓ		ﾆ		ｵ	ﾖ	ｵ			ﾖ	ﾖ	t[! bb95 h. {h[9(/9b/9	{99 [illegible]	[illegible]	[illegible]	[illegible]	[illegible]
Y9D! ¤c[! /Y	[illegible]	! ⊡[Y	D/t	t[w	a ⊠			ｷ	∂		ﾓ		ﾆ							ﾖ	ﾖ	t[! bb95 h. {h[9(/9b/9	{99 [illegible]	[illegible]	[illegible]	[illegible]	[illegible]
Y9D! ¤c[! /Y	[illegible]	! ⊡[Y	D/t	t[w	a ⊠				∂				ﾆ		ｵ					ﾖ	ﾖ	t[! bb95 h. {h[9(/9b/9	{99 [illegible]	[illegible]	[illegible]	[illegible]	[illegible]
Y9D! ¤c[! /Y	[illegible]	! ⊡[Y	D/t	t[w	a ⊠								ﾆ							ﾖ	ﾖ	t[! bb95 h. {h[9(/9b/9	{99 [illegible]	[illegible]	[illegible]	[illegible]	[illegible]
Y9D! ¤c[! /Y	[illegible]	! ⊡[Y	D/t	t[w	a ⊠				∂				ﾆ		ｵ			ｵ	ﾖ	ﾖ	ﾖ	t[! bb95 h. {h[9(/9b/9	{99 [illegible]	[illegible]	[illegible]	[illegible]	[illegible]
Y9D! ¤c[! /Y	[illegible]	! ⊡[Y	D/t	t[w	a ⊠										ｵ	ﾖ		ｵ		ﾖ	ﾖ	t[! bb95 h. {h[9(/9b/9	{99 [illegible]	[illegible]	[illegible]	[illegible]	[illegible]
Y9D! ¤c[! /Y	[illegible]	! ⊡[Y	D/t	t[w	a ⊠	ﾐ							ﾆ		ｵ	ﾖ		ｵ		ﾖ	ﾖ	t[! bb95 h. {h[9(/9b/9	{99 [illegible]	[illegible]	[illegible]	[illegible]	[illegible]
Y9D! ¤c[! /Y	[illegible]	! ⊡[Y	D/t	t[w	a ⊠	ﾐ	ｷ	ｷ	∂	ゑ	ﾓ	ｈ	ﾆ		ｵ	ﾖ		ｵ		ﾖ	ﾖ	t[! bb95 h. {h[9(/9b/9	{99 [illegible]	[illegible]	[illegible]	[illegible]	[illegible]
Y9D! ¤c[! /Y	[illegible]	! ⊡[Y	D/t	t[w	a ⊠	ﾐ	ｷ	ｷ				ｈ					ｵ	ｵ			ﾖ	t[! bb95 h. {h[9(/9b/9	{99 [illegible]	[illegible]	[illegible]	[illegible]	[illegible]
Y9D! ¤c[! /Y	[illegible]	! ⊡[Y	D/t	t[w	a ⊠			ｷ			ﾓ					ﾖ		ｵ	ﾖ			t[! bb95 h. {h[9(/9b/9	{99 [illegible]	[illegible]	[illegible]	[illegible]	[illegible]
Y9D! ¤c[! /Y	[illegible]	! ⊡[Y	D/t	t[w	a ⊠								ﾆ								ﾖ	t[! bb95 h. {h[9(/9b/9	{99 [illegible]	[illegible]	[illegible]	[illegible]	[illegible]
Y9D! ¤c[! /Y	[illegible]	! ⊡[Y	D/t	t[w	a ⊠			ｷ			ﾓ					ﾖ			ﾖ			t[! bb95 h. {h[9(/9b/9	{99 [illegible]	[illegible]	[illegible]	[illegible]	[illegible]
Y9D! ¤c[! /Y	[illegible]	! ⊡[Y	D/t	t[w	a ⊠	ﾐ	ｷ	ｷ	∂	ゑ	ﾓ	ｈ	ﾆ		ｵ	ﾖ	ｵ	ｵ	ﾖ	ﾖ		t[! bb95 h. {h[9(/9b/9	{99 [illegible]	[illegible]	[illegible]	[illegible]	[illegible]
Y9D! ¤c[! /Y	[illegible]	! ⊡[Y	D/t	t[w	a ⊠	ﾐ	ｷ	ｷ	∂	ゑ		ｈ	ﾆ		ｵ	ﾖ	ｵ	ｵ	ﾖ	ﾖ		t[! bb95 h. {h[9(/9b/9	{99 [illegible]	[illegible]	[illegible]	[illegible]	[illegible]
Y9D! ¤c[! /Y	[illegible]	! ⊡[Y	D/t	t[w	a ⊠	ﾐ	ｷ	ｷ				ｈ	ﾆ		ｵ				ﾖ			t[! bb95 h. {h[9(/9b/9	{99 [illegible]	[illegible]	[illegible]	[illegible]	[illegible]
Y9D! ¤c[! /Y	[illegible]	! ⊡[Y	D/t	t[w	a ⊠	ﾐ	ｷ					ｈ	ﾆ		ｵ				ﾖ			t[! bb95 h. {h[9(/9b/9	{99 [illegible]	[illegible]	[illegible]	[illegible]	[illegible]
Y9D! ¤c[! /Y	[illegible]	! ⊡[Y	D/t	t[w	a ⊠		ｷ	ｷ	∂	ゑ		ｈ			ｵ	ﾖ	ｵ	ｵ	ﾖ	ﾖ		t[! bb95 h. {h[9(/9b/9	{99 [illegible]	[illegible]	[illegible]	[illegible]	[illegible]
Y9D! ¤c[! /Y	[illegible]	! ⊡[Y	D/t	t[w	a ⊠		ｷ	ｷ				ｈ			ｵ	ﾖ			ﾖ			t[! bb95 h. {h[9(/9b/9	{99 [illegible]	[illegible]	[illegible]	[illegible]	[illegible]
Y9D! ¤c[! /Y	[illegible]	! ⊡[Y	D/t	t[w	a ⊠		ｷ					ｈ			ｵ				ﾖ			t[! bb95 h. {h[9(/9b/9	{99 [illegible]	[illegible]	[illegible]	[illegible]	[illegible]
Y9D! ¤c[! /Y	[illegible]	! ⊡[Y	D/t	t[w	a ⊠	ﾐ	ｷ			ゑ	ﾓ		ﾆ		ｵ	ﾖ	ｵ	ｵ	ﾖ	ﾖ	ﾖ	t[! bb95 h. {h[9(/9b/9	{99 [illegible]	[illegible]	[illegible]	[illegible]	[illegible]
Y9D! ¤c[! /Y	[illegible]	! ⊡[Y	D/t	t[w	a ⊠	ﾐ	ｷ									ﾖ	ｵ	ｵ	ﾖ	ﾖ	ﾖ	t[! bb95 h. {h[9(/9b/9	{99 [illegible]	[illegible]	[illegible]	[illegible]	[illegible]
Y9D! ¤c[! /Y	[illegible]	! ⊡[Y	D/t	t[w	a ⊠	ﾐ	ｷ	ｷ					ﾆ		ｵ	ﾖ			ﾖ		ﾖ	t[! bb95 h. {h[9(/9b/9	{99 [illegible]	[illegible]	[illegible]	[illegible]	[illegible]
Y9D! ¤c[! /Y	[illegible]	! ⊡[Y	D/t	t[w	a ⊠		ｷ	ｷ							ｵ	ﾖ			ﾖ			t[! bb95 h. {h[9(/9b/9	{99 [illegible]	[illegible]	[illegible]	[illegible]	[illegible]
Y9D! ¤c[! /Y	[illegible]	! ⊡[Y	D/t	t[w	a ⊠		ｷ								ｵ				ﾖ			t[! bb95 h. {h[9(/9b/9	{99 [illegible]	[illegible]	[illegible]	[illegible]	[illegible]
Y9D! ¤c[! /Y	[illegible]	! ⊡[Y	D/t	t[w	a ⊠	ﾐ	ｷ	ｷ	∂	ゑ	ﾓ	ｈ	ﾆ						ﾖ	ﾖ		t[! bb95 h. {h[9(/9b/9	{99 [illegible]	[illegible]	[illegible]	[illegible]	[illegible]
Y9D! ¤c[! /Y	[illegible]	! ⊡[Y	D/t	t[w	a ⊡																	{! [9! . [9		[illegible]	[illegible]	[illegible]	[illegible]
Y9D. ¤[DI ¤DwI £	[illegible]	. [D	D/t	t[w	a ⊡																	{! [9! . [9		[illegible]	[illegible]	[illegible]	[illegible]
Y9D/¤c wh° b	[illegible]	/ ⊡w	D/t	t[w	a ⊡																	bh¤w9/ha a 9b595	{99 [illegible]	[illegible]	[illegible]	[illegible]	[illegible]
Y9D5¤Dw99b	[illegible]	5Dw	D/t	t[w	a ⊡																	bh¤w9/ha a 9b595	{99 [illegible]	[illegible]	[illegible]	[illegible]	[illegible]
¹ h15 Y9£	[illegible]																										
Y9D! ¤c[! /Y	[illegible]	! ⊡[Y	D/t	t[w	a ⊡								ﾆ									{! [9! . [9		[illegible]	[illegible]	[illegible]	[illegible]
Y9D. ¤[DI ¤DwI £	[illegible]	. [D	D/t	t[w	a ⊡								ﾆ									{! [9! . [9		[illegible]	[illegible]	[illegible]	[illegible]
Y9D/¤c wh° b	[illegible]	/ ⊡w	D/t	t[w	a ⊡								ﾆ									bh¤w9/ha a 9b595	{99 [illegible]	[illegible]	[illegible]	[illegible]	[illegible]
Y9D5¤Dw99b	[illegible]	5Dw	D/t	t[w	a ⊡								ﾆ									bh¤w9/ha a 9b595	{99 [illegible]	[illegible]	[illegible]	[illegible]	[illegible]
¹ h15 Y9£	[illegible]																										
Y9D! ¤c[! /Y	[illegible]	! ⊡[Y	D/t	t[w	a ⊡								ﾆ									{! [9! . [9		[illegible]	[illegible]	[illegible]	[illegible]
Y9D. ¤[DI ¤DwI £	[illegible]	. [D	D/t	t[w	a ⊡								ﾆ									{! [9! . [9		[illegible]	[illegible]	[illegible]	[illegible]
Y9D/¤c wh° b	[illegible]	/ ⊡w	D/t	t[w	a ⊡								ﾆ									bh¤w9/ha a 9b595	{99 [illegible]	[illegible]	[illegible]	[illegible]	[illegible]
Y9D5¤Dw99b	[illegible]	5Dw	D/t	t[w	a ⊡								ﾆ									bh¤w9/ha a 9b595	{99 [illegible]	[illegible]	[illegible]	[illegible]	[illegible]
¹ h15 Y9£	[illegible]																										
Y9D! ¤c[! /Y	[illegible]	! ⊡[Y	D/t	t[w	a ⊡	ﾐ							ﾆ									{! [9! . [9		[illegible]	[illegible]	[illegible]	[illegible]
Y9D. ¤[DI ¤DwI £	[illegible]	. [D	D/t	t[w	a ⊡	ﾐ							ﾆ									{! [9! . [9		[illegible]	[illegible]	[illegible]	[illegible]
Y9D/¤c wh° b	[illegible]	/ ⊡w	D/t	t[w	a ⊡	ﾐ							ﾆ									bh¤w9/ha a 9b595	{99 [illegible]	[illegible]	[illegible]	[illegible]	[illegible]
Y9D5¤Dw99b	[illegible]	5Dw	D/t	t[w	a ⊡	ﾐ							ﾆ									bh¤w9/ha a 9b595	{99 [illegible]	[illegible]	[illegible]	[illegible]	[illegible]
¹ h15 Y9£	[illegible]																										
Y9D! ¤c[! /Y	[illegible]	! ⊡[Y	D/t	t[w	a ⊡	ﾐ	ｷ	ｷ	∂	ゑ	ﾓ	ｈ	ﾆ		ｵ	ﾖ	ｵ	ｵ	ﾖ	ﾖ	ﾖ	{! [9! . [9		[illegible]	[illegible]	[illegible]	[illegible]
Y9D. ¤[DI ¤DwI £	[illegible]	. [D	D/t	t[w	a ⊡	ﾐ	ｷ	ｷ	∂	ゑ	ﾓ	ｈ	ﾆ		ｵ	ﾖ	ｵ	ｵ	ﾖ	ﾖ	ﾖ	{! [9! . [9		[illegible]	[illegible]	[illegible]	[illegible]
Y9D/¤c wh° b	[illegible]	/ ⊡w	D/t	t[w	a ⊡	ﾐ	ｷ	ｷ	∂	ゑ	ﾓ	ｈ	ﾆ		ｵ	ﾖ	ｵ	ｵ	ﾖ	ﾖ	ﾖ	bh¤w9/ha a 9b595	{99 [illegible]	[illegible]	[illegible]	[illegible]	[illegible]
Y9D5¤Dw99b	[illegible]	5Dw	D/t	t[w	a ⊡	ﾐ	ｷ	ｷ	∂	ゑ	ﾓ	ｈ	ﾆ		ｵ	ﾖ	ｵ	ｵ	ﾖ	ﾖ	ﾖ	bh¤w9/ha a 9b595	{99 [illegible]	[illegible]	[illegible]	[illegible]	[illegible]
¹ h15 Y9£	[illegible]																										
Y9D! ¤c[! /Y	[illegible]	! ⊡[Y	D/t	t[w	a ⊡															ﾖ		{! [9! . [9		[illegible]	[illegible]	[illegible]	[illegible]
Y9D! ¤c[! /Y	[illegible]	! ⊡[Y	D/t	t[w	a ⊡	ﾐ							ﾆ								ﾖ	{! [9! . [9		[illegible]	[illegible]	[illegible]	[illegible]
Y9D. ¤[DI ¤DwI £	[illegible]	. [D	D/t	t[w	a ⊡	ﾐ							ﾆ								ﾖ	{! [9! . [9		[illegible]	[illegible]	[illegible]	[illegible]
Y9D/¤c wh° b	[illegible]	/ ⊡w	D/t	t[w	a ⊡	ﾐ							ﾆ								ﾖ	bh¤w9/ha a 9b595	{99 [illegible]	[illegible]	[illegible]	[illegible]	[illegible]
Y9D5¤Dw99b	[illegible]	5Dw	D/t	t[w	a ⊡	ﾐ							ﾆ								ﾖ	bh¤w9/ha a 9b595	{99 [illegible]	[illegible]	[illegible]	[illegible]	[illegible]
¹ h15 Y9£	[illegible]																										
Y9D! ¤c[! /Y	[illegible]	! ⊡[Y	D/t	t[w	a ⊡				∂			ｈ	ﾆ				ｵ	ｵ	ﾖ			{! [9! . [9		[illegible]	[illegible]	[illegible]	[illegible]
Y9D! ¤c[! /Y	[illegible]	! ⊡[Y	D/t	t[w	a ⊡			ｷ	∂	ゑ					ｵ	ﾖ	ｵ	ｵ	ﾖ	ﾖ	ﾖ	{! [9! . [9		[illegible]	[illegible]	[illegible]	[illegible]
Y9D! ¤c[! /Y	[illegible]	! ⊡[Y	D/t	t[w	a ⊡							ｈ	ﾆ				ｵ	ｵ	ﾖ			{! [9! . [9		[illegible]	[illegible]	[illegible]	[illegible]
Y9D. ¤[DI ¤DwI £	[illegible]	. [D	D/t	t[w	a ⊡													ｵ	ﾖ	ﾖ	ﾖ	{! [9! . [9		[illegible]	[illegible]	[illegible]	[illegible]
Y9D! ¤c[! /Y	[illegible]	! ⊡[Y	D/t	t[w	a ⊡										ｵ	ﾖ		ｵ	ﾖ	ﾖ	ﾖ	{! [9! . [9		[illegible]	[illegible]	[illegible]	[illegible]
Y9D! ¤c[! /Y	[illegible]	! ⊡[Y	D/t	t[w	a ⊡										ｵ	ﾖ				ﾖ	ﾖ	{! [9! . [9		[illegible]	[illegible]	[illegible]	[illegible]
Y9D! ¤c[! /Y	[illegible]	! ⊡[Y	D/t	t[w	a ⊡								ﾆ		ｵ	ﾖ	ｵ			ﾖ	ﾖ	{! [9! . [9		[illegible]	[illegible]	[illegible]	[illegible]
Y9D! ¤c[! /Y	[illegible]	! ⊡[Y	D/t	t[w	a ⊡															ﾖ		{! [9! . [9		[illegible]	[illegible]	[illegible]	[illegible]

a [illegible] [! 59{9! [95 ! {{Ða ! ¤{9! [
. ha ! b5 t Ιb h- ¤{I 99¤

! {{9a . [Ð59{/wt¤Ιhb	! {{9a . [Ðt! w¤ b- a . 9w	/ha thb9b¤				. [h/Y95 ¤9wa Ιb! [{																{¤! ¤- {	/ha a 9b¤{	ht¤Ιhb! [! ¤¤! ¤/I a 9b¤{ {h[5 {9t9W ¤9[Ð			
		¤I 9 tw9{9b/9 hC! b ! . . w9¹ Ι! ¤Ιhb Ιb5 Ι/! ¤9{ ¤I 9 tw9{9b/9 hC¤I ! ¤/ha thb9b¤				/! ¹ Ι¤Ð° Ι¤I ! b- a . 9wΙb5 Ι/! ¤9{ . [h/Y95 ¤9wa Ιb! [th{Ι¤Ιhb /! ¹ Ι¤Ð° Ι¤I h- ¤! b- a . 9wΙb5 Ι/! ¤9{ ht9b ¤9wa Ιb! [th{Ι¤Ιhb																					
		I h- {ΙbD Y9Ð[illegible]h[hw	Dwha a 9¤ /! t	t[w	a ! ¤{9! [	ろ	ゎ	わ	ゐ	ゑ	を	ん	ゔ	゛	ヺれ	ヺろ	ヺゎ	ヺわ	ヺゐ	ヺゑ	ヺを			. ! /Y{I 9[[° Ι¤I wΙ {	. ! /Y{I 9[[° Ι¤I h- ¤ wΙ {	[illegible]! 5! t¤hw° Ι¤I wΙ {	[illegible]! 5! t¤hw° Ι¤I h- ¤ wΙ {
Y9Ð! ☞[! /Y	[illegible]	! ⊡[Y	D/t	t[w	a ⊡					ゑ											ヺ	{! [9! . [9		[illegible]	[illegible]	[illegible]	[illegible]
Y9Ð! ☞[! /Y	[illegible]	! ⊡[Y	D/t	t[w	a ⊡					ゑ												{! [9! . [9		[illegible]	[illegible]	[illegible]	[illegible]
Y9Ð. ☞[ΙDI ¤Dw! £	[illegible]	. ⊡D	D/t	t[w	a ⊡				ə		ぇ	ﾊ	ﾆ				ヺ		ヺ			{! [9! . [9		[illegible]	[illegible]	[illegible]	[illegible]
Y9Ð! ☞[! /Y	[illegible]	! ⊡[Y	D/t	t[w	a ⊡															ヺ	ヺ	{! [9! . [9		[illegible]	[illegible]	[illegible]	[illegible]
Y9Ð. ☞[ΙDI ¤Dw! £	[illegible]	. ⊡D	D/t	t[w	a ⊡				ə													{! [9! . [9		[illegible]	[illegible]	[illegible]	[illegible]
Y9Ð. ☞[ΙDI ¤Dw! £	[illegible]	. ⊡D	D/t	t[w	a ⊡				ə		ぇ	ﾊ	ﾆ									{! [9! . [9		[illegible]	[illegible]	[illegible]	[illegible]
Y9Ð! ☞[! /Y	[illegible]	! ⊡[Y	D/t	t[w	a ⊡				ə		ぇ	ﾊ	ﾆ				ヺ					{! [9! . [9		[illegible]	[illegible]	[illegible]	[illegible]
Y9Ð! ☞[! /Y	[illegible]	! ⊡[Y	D/t	t[w	a ⊡																ヺ	{! [9! . [9		[illegible]	[illegible]	[illegible]	[illegible]
Y9Ð! ☞[! /Y	[illegible]	! ⊡[Y	D/t	t[w	a ⊡				ə								ヺ					{! [9! . [9		[illegible]	[illegible]	[illegible]	[illegible]
Y9Ð. ☞[ΙDI ¤Dw! £	[illegible]	. ⊡D	D/t	t[w	a ⊡																ヺ	{! [9! . [9		[illegible]	[illegible]	[illegible]	[illegible]
Y9Ð. ☞[ΙDI ¤Dw! £	[illegible]	. ⊡D	D/t	t[w	a ⊡				ə								ヺ		ヺ			{! [9! . [9		[illegible]	[illegible]	[illegible]	[illegible]
Y9Ð. ☞[ΙDI ¤Dw! £	[illegible]	. ⊡D	D/t	t[w	a ⊡														ヺ			{! [9! . [9		[illegible]	[illegible]	[illegible]	[illegible]
Y9Ð. ☞[ΙDI ¤Dw! £	[illegible]	. ⊡D	D/t	t[w	a ⊡						ぇ	ﾊ	ﾆ						ヺ			{! [9! . [9		[illegible]	[illegible]	[illegible]	[illegible]
Y9Ð! ☞[! /Y	[illegible]	! ⊡[Y	D/t	t[w	a ⊡															ヺ		{! [9! . [9		[illegible]	[illegible]	[illegible]	[illegible]
Y9Ð! ☞[! /Y	[illegible]	! ⊡[Y	D/t	t[w	a ⊡				ə				ﾆ				ヺ					{! [9! . [9		[illegible]	[illegible]	[illegible]	[illegible]
Y9Ð. ☞[ΙDI ¤Dw! £	[illegible]	. ⊡D	D/t	t[w	a ⊡				ə				ﾆ				ヺ		ヺ			{! [9! . [9		[illegible]	[illegible]	[illegible]	[illegible]
Y9Ð. ☞[ΙDI ¤Dw! £	[illegible]	. ⊡D	D/t	t[w	a ⊡								ﾆ						ヺ			{! [9! . [9		[illegible]	[illegible]	[illegible]	[illegible]
Y9Ð! ☞[! /Y	[illegible]	! ⊡[Y	D/t	t[w	a ⊡	ミ						ﾊ										{! [9! . [9		[illegible]	[illegible]	[illegible]	[illegible]
Y9Ð. ☞[ΙDI ¤Dw! £	[illegible]	. ⊡D	D/t	t[w	a ⊡		ｨ		ə		ぇ	ﾊ	ﾆ				ヺ		ヺ			{! [9! . [9		[illegible]	[illegible]	[illegible]	[illegible]
Y9Ð. ☞[ΙDI ¤Dw! £	[illegible]	. ⊡D	D/t	t[w	a ⊡		ｨ				ぇ	ﾊ	ﾆ						ヺ			{! [9! . [9		[illegible]	[illegible]	[illegible]	[illegible]
Y9Ð. ☞[ΙDI ¤Dw! £	[illegible]	. ⊡D	D/t	t[w	a ⊡		ｨ						ﾆ						ヺ			{! [9! . [9		[illegible]	[illegible]	[illegible]	[illegible]
Y9Ð! ☞[! /Y	[illegible]	! ⊡[Y	D/t	t[w	a ⊡		ｨ		ə				ﾆ				ヺ					{! [9! . [9		[illegible]	[illegible]	[illegible]	[illegible]
Y9Ð. ☞[ΙDI ¤Dw! £	[illegible]	. ⊡D	D/t	t[w	a ⊡		ｨ		ə				ﾆ						ヺ			{! [9! . [9		[illegible]	[illegible]	[illegible]	[illegible]
Y9Ð! ☞[! /Y	[illegible]	! ⊡[Y	D/t	t[w	a ⊡		ｨ						ﾆ									{! [9! . [9		[illegible]	[illegible]	[illegible]	[illegible]
Y9Ð! ☞[! /Y	[illegible]	! ⊡[Y	D/t	t[w	a ⊡			ｨ					ﾆ		ヺ	ヺ				ヺ	ヺ	{! [9! . [9		[illegible]	[illegible]	[illegible]	[illegible]
Y9Ð! ☞[! /Y	[illegible]	! ⊡[Y	D/t	t[w	a ⊡			ｨ	ə	ゑ	ぇ	ﾊ	ﾆ		ヺ	ヺ				ヺ	ヺ	{! [9! . [9		[illegible]	[illegible]	[illegible]	[illegible]
Y9Ð! ☞[! /Y	[illegible]	! ⊡[Y	D/t	t[w	a ⊡		ｨ				ぇ	ﾊ	ﾆ		ヺ			ヺ	ヺ	ヺ	ヺ	{! [9! . [9		[illegible]	[illegible]	[illegible]	[illegible]
Y9Ð! ☞[! /Y	[illegible]	! ⊡[Y	D/t	t[w	a ⊡		ｨ			ゑ	ぇ				ヺ			ヺ	ヺ	ヺ	ヺ	{! [9! . [9		[illegible]	[illegible]	[illegible]	[illegible]
Y9Ð! ☞[! /Y	[illegible]	! ⊡[Y	D/t	t[w	a ⊡		ｨ			ゑ	ぇ				ヺ	ヺ		ヺ	ヺ	ヺ	ヺ	{! [9! . [9		[illegible]	[illegible]	[illegible]	[illegible]
Y9Ð! ☞[! /Y	[illegible]	! ⊡[Y	D/t	t[w	a ⊡		ｨ				ぇ				ヺ			ヺ	ヺ			{! [9! . [9		[illegible]	[illegible]	[illegible]	[illegible]
Y9Ð! ☞[! /Y	[illegible]	! ⊡[Y	D/t	t[w	a ⊡		ｨ		ə	ゑ	ぇ	ﾊ	ﾆ		ヺ	ヺ	ヺ	ヺ	ヺ			{! [9! . [9		[illegible]	[illegible]	[illegible]	[illegible]
Y9Ð! ☞[! /Y	[illegible]	! ⊡[Y	D/t	t[w	a ⊡		ｨ		ə	ゑ	ぇ				ヺ		ヺ	ヺ	ヺ			{! [9! . [9		[illegible]	[illegible]	[illegible]	[illegible]
Y9Ð! ☞[! /Y	[illegible]	! ⊡[Y	D/t	t[w	a ⊡				ə				ﾆ									{! [9! . [9		[illegible]	[illegible]	[illegible]	[illegible]
Y9Ð! ☞[! /Y	[illegible]	! ⊡[Y	D/t	t[w	a ⊡		ｨ				ぇ	ﾊ	ﾆ									{! [9! . [9		[illegible]	[illegible]	[illegible]	[illegible]
Y9Ð! ☞[! /Y	[illegible]	! ⊡[Y	D/t	t[w	a ⊡		ｨ			ゑ	ぇ											{! [9! . [9		[illegible]	[illegible]	[illegible]	[illegible]
Y9Ð! ☞[! /Y	[illegible]	! ⊡[Y	D/t	t[w	a ⊡		ｨ			ゑ	ぇ					ヺ						{! [9! . [9		[illegible]	[illegible]	[illegible]	[illegible]
Y9Ð! ☞[! /Y	[illegible]	! ⊡[Y	D/t	t[w	a ⊡					ゑ	ぇ	ﾊ	ﾆ					ヺ				{! [9! . [9		[illegible]	[illegible]	[illegible]	[illegible]
Y9Ð! ☞[! /Y	[illegible]	! ⊡[Y	D/t	t[w	a ⊡					ゑ	ぇ	ﾊ	ﾆ			ヺ		ヺ				{! [9! . [9		[illegible]	[illegible]	[illegible]	[illegible]
Y9Ð! ☞[! /Y	[illegible]	! ⊡[Y	D/t	t[w	a ⊡					ゑ	ぇ	ﾊ	ﾆ				ヺ	ヺ	ヺ			{! [9! . [9		[illegible]	[illegible]	[illegible]	[illegible]
Y9Ð! ☞[! /Y	[illegible]	! ⊡[Y	D/t	t[w	a ⊡					ゑ	ぇ	ﾊ	ﾆ			ヺ	ヺ	ヺ	ヺ			{! [9! . [9		[illegible]	[illegible]	[illegible]	[illegible]
Y9Ð! ☞[! /Y	[illegible]	! ⊡[Y	D/t	t[w	a ⊡					ゑ	ぇ	ﾊ	ﾆ			ヺ	ヺ	ヺ	ヺ	ヺ		{! [9! . [9		[illegible]	[illegible]	[illegible]	[illegible]
Y9Ð! ☞[! /Y	[illegible]	! ⊡[Y	D/t	t[w	a ⊡							ﾊ								ヺ		{! [9! . [9		[illegible]	[illegible]	[illegible]	[illegible]
Y9Ð! ☞[! /Y	[illegible]	! ⊡[Y	D/t	t[w	a ⊡				ə	ゑ	ぇ									ヺ	ヺ	{! [9! . [9		[illegible]	[illegible]	[illegible]	[illegible]
Y9Ð! ☞[! /Y	[illegible]	! ⊡[Y	D/t	t[w	a ⊡			ｨ	ə	ゑ	ぇ									ヺ	ヺ	{! [9! . [9		[illegible]	[illegible]	[illegible]	[illegible]
Y9Ð! ☞[! /Y	[illegible]	! ⊡[Y	D/t	t[w	a ⊡	ミ	ｨ	ｨ	ə	ゑ	ぇ							ヺ		ヺ	ヺ	{! [9! . [9		[illegible]	[illegible]	[illegible]	[illegible]
Y9Ð! ☞[! /Y	[illegible]	! ⊡[Y	D/t	t[w	a ⊡													ヺ	ヺ	ヺ	ヺ	{! [9! . [9		[illegible]	[illegible]	[illegible]	[illegible]
Y9Ð! ☞[! /Y	[illegible]	! ⊡[Y	D/t	t[w	a ⊡								ﾆ					ヺ	ヺ	ヺ	ヺ	{! [9! . [9		[illegible]	[illegible]	[illegible]	[illegible]
Y9Ð! ☞[! /Y	[illegible]	! ⊡[Y	D/t	t[w	a ⊡							ﾊ	ﾆ			ヺ	ヺ	ヺ	ヺ	ヺ		{! [9! . [9		[illegible]	[illegible]	[illegible]	[illegible]
Y9Ð! ☞[! /Y	[illegible]	! ⊡[Y	D/t	t[w	a ⊡							ﾊ	ﾆ				ヺ	ヺ	ヺ	ヺ		{! [9! . [9		[illegible]	[illegible]	[illegible]	[illegible]
Y9Ð! ☞[! /Y	[illegible]	! ⊡[Y	D/t	t[w	a ⊡							ﾊ	ﾆ			ヺ		ヺ				{! [9! . [9		[illegible]	[illegible]	[illegible]	[illegible]
Y9Ð! ☞[! /Y	[illegible]	! ⊡[Y	D/t	t[w	a ⊡							ﾊ	ﾆ					ヺ				{! [9! . [9		[illegible]	[illegible]	[illegible]	[illegible]
Y9Ð! ☞[! /Y	[illegible]	! ⊡[Y	D/t	t[w	a ⊡					ゑ								ヺ				{! [9! . [9		[illegible]	[illegible]	[illegible]	[illegible]
Y9Ð! ☞[! /Y	[illegible]	! ⊡[Y	D/t	t[w	a ⊡		ｨ								ヺ					ヺ	ヺ	{! [9! . [9		[illegible]	[illegible]	[illegible]	[illegible]
Y9Ð! ☞[! /Y	[illegible]	! ⊡[Y	D/t	t[w	a ⊡		ｨ								ヺ					ヺ		{! [9! . [9		[illegible]	[illegible]	[illegible]	[illegible]
Y9Ð! ☞[! /Y	[illegible]	! ⊡[Y	D/t	t[w	a ⊡		ｨ			ゑ	ぇ	ﾊ	ﾆ		ヺ		ヺ		ヺ	ヺ	ヺ	{! [9! . [9		[illegible]	[illegible]	[illegible]	[illegible]
Y9Ð! ☞[! /Y	[illegible]	! ⊡[Y	D/t	t[w	a ⊡		ｨ			ゑ	ぇ	ﾊ	ﾆ		ヺ		ヺ		ヺ	ヺ		{! [9! . [9		[illegible]	[illegible]	[illegible]	[illegible]
Y9Ð! ☞[! /Y	[illegible]	! ⊡[Y	D/t	t[w	a ⊡	ミ	ｨ	ｨ	ə	ゑ	ぇ				ヺ	ヺ	ヺ	ヺ	ヺ	ヺ	ヺ	{! [9! . [9		[illegible]	[illegible]	[illegible]	[illegible]
Y9Ð! ☞[! /Y	[illegible]	! ⊡[Y	D/t	t[w	a ⊡	ミ	ｨ	ｨ	ə	ゑ	ぇ					ヺ	ヺ	ヺ	ヺ	ヺ	ヺ	{! [9! . [9		[illegible]	[illegible]	[illegible]	[illegible]
Y9Ð! ☞[! /Y	[illegible]	! ⊡[Y	D/t	t[w	a ⊡							ﾊ	ﾆ		ヺ	ヺ	ヺ	ヺ	ヺ	ヺ	ヺ	{! [9! . [9		[illegible]	[illegible]	[illegible]	[illegible]
Y9Ð! ☞[! /Y	[illegible]	! ⊡[Y	D/t	t[w	a ⊡								ﾆ		ヺ	ヺ	ヺ	ヺ	ヺ	ヺ	ヺ	{! [9! . [9		[illegible]	[illegible]	[illegible]	[illegible]
Y9Ð! ☞[! /Y	[illegible]	! ⊡[Y	D/t	t[w	a ⊡	ミ	ｨ	ｨ	ə	ゑ	ぇ								ヺ	ヺ	ヺ	{! [9! . [9		[illegible]	[illegible]	[illegible]	[illegible]
Y9Ð! ☞[! /Y	[illegible]	! ⊡[Y	D/t	t[w	a ⊡										ヺ	ヺ	ヺ	ヺ	ヺ	ヺ	ヺ	{! [9! . [9		[illegible]	[illegible]	[illegible]	[illegible]
Y9Ð! ☞[! /Y	[illegible]	! ⊡[Y	D/t	t[w	a ⊡											ヺ	ヺ	ヺ	ヺ	ヺ	ヺ	{! [9! . [9		[illegible]	[illegible]	[illegible]	[illegible]
Y9Ð! ☞[! /Y	[illegible]	! ⊡[Y	D/t	t[w	a ⊡							ﾊ	ﾆ		ヺ							{! [9! . [9		[illegible]	[illegible]	[illegible]	[illegible]
Y9Ð! ☞[! /Y	[illegible]	! ⊡[Y	D/t	t[w	a ⊡														ヺ	ヺ	ヺ	{! [9! . [9		[illegible]	[illegible]	[illegible]	[illegible]
Y9Ð! ☞[! /Y	[illegible]	! ⊡[Y	D/t	t[w	a ⊡												ヺ	ヺ	ヺ	ヺ	ヺ	{! [9! . [9		[illegible]	[illegible]	[illegible]	[illegible]
Y9Ð! ☞[! /Y	[illegible]	! ⊡[Y	D/t	t[w	a ⊡	ミ	ｨ	ｨ	ə	ゑ	ぇ	ﾊ	ﾆ		ヺ							{! [9! . [9		[illegible]	[illegible]	[illegible]	[illegible]
Y9Ð. ☞[ΙDI ¤Dw! £	[illegible]	. ⊡D	D/t	t[w	a ⊡	ミ	ｨ	ｨ	ə	ゑ	ぇ	ﾊ	ﾆ		ヺ		ヺ		ヺ	ヺ	ヺ	{! [9! . [9		[illegible]	[illegible]	[illegible]	[illegible]
Y9Ð. ☞[ΙDI ¤Dw! £	[illegible]	. ⊡D	D/t	t[w	a ⊡	ミ	ｨ	ｨ	ə		ぇ	ﾊ	ﾆ		ヺ		ヺ		ヺ	ヺ		{! [9! . [9		[illegible]	[illegible]	[illegible]	[illegible]
Y9Ð! ☞[! /Y	[illegible]	! ⊡[Y	D/t	t[w	a ⊡		ｨ	ｨ	ə						ヺ					ヺ	ヺ	{! [9! . [9		[illegible]	[illegible]	[illegible]	[illegible]
Y9Ð! ☞[! /Y	[illegible]	! ⊡[Y	D/t	t[w	a ⊡		ｨ	ｨ	ə	ゑ	ぇ	ﾊ	ﾆ		ヺ		ヺ		ヺ	ヺ	ヺ	{! [9! . [9		[illegible]	[illegible]	[illegible]	[illegible]
Y9Ð! ☞[! /Y	[illegible]	! ⊡[Y	D/t	t[w	a ⊡	ミ	ｨ	ｨ	ə			ﾊ	ﾆ		ヺ	ヺ	ヺ			ヺ	ヺ	{! [9! . [9		[illegible]	[illegible]	[illegible]	[illegible]
Y9Ð! ☞[! /Y	[illegible]	! ⊡[Y	D/t	t[w	a ⊡	ミ	ｨ	ｨ	ə				ﾆ		ヺ	ヺ	ヺ				ヺ	{! [9! . [9		[illegible]	[illegible]	[illegible]	[illegible]
Y9Ð! ☞[! /Y	[illegible]	! ⊡[Y	D/t	t[w	a ⊡	ミ	ｨ	ｨ	ə	ゑ	ぇ	ﾊ	ﾆ					ヺ	ヺ	ヺ	ヺ	{! [9! . [9		[illegible]	[illegible]	[illegible]	[illegible]
Y9Ð! ☞[! /Y	[illegible]	! ⊡[Y	D/t	t[w	a ⊡													ヺ	ヺ	ヺ	ヺ	{! [9! . [9		[illegible]	[illegible]	[illegible]	[illegible]
Y9Ð! ☞[! /Y	[illegible]	! ⊡[Y	D/t	t[w	a ⊡	ミ				ゑ		ﾊ	ﾆ		ヺ	ヺ			ヺ	ヺ		{! [9! . [9		[illegible]	[illegible]	[illegible]	[illegible]
Y9Ð! ☞[! /Y	[illegible]	! ⊡[Y	D/t	t[w	a ⊡												ヺ		ヺ			{! [9! . [9		[illegible]	[illegible]	[illegible]	[illegible]
Y9Ð. ☞[ΙDI ¤Dw! £	[illegible]	. ⊡D	D/t	t[w	a ⊡				ə		ぇ	ﾊ	ﾆ			ヺ	ヺ	ヺ	ヺ			{! [9! . [9		[illegible]	[illegible]	[illegible]	[illegible]
Y9Ð. ☞[ΙDI ¤Dw! £	[illegible]	. ⊡D	D/t	t[w	a ⊡	ミ	ｨ	ｨ	ə		ぇ	ﾊ	ﾆ		ヺ	ヺ	ヺ	ヺ	ヺ	ヺ		{! [9! . [9		[illegible]	[illegible]	[illegible]	[illegible]
Y9Ð! ☞[! /Y	[illegible]	! ⊡[Y	D/t	t[w	a ⊡	ミ	ｨ	ｨ	ə	ゑ	ぇ							ヺ	ヺ	ヺ	ヺ	{! [9! . [9		[illegible]	[illegible]	[illegible]	[illegible]
Y9Ð! ☞[! /Y	[illegible]	! ⊡[Y	D/t	t[w	a ⊡														ヺ	ヺ		{! [9! . [9		[illegible]	[illegible]	[illegible]	[illegible]
Y9Ð/☞6! w/ Dw! £	[illegible]	/ ⊡D	D/t	t[w	a ⊡																	{! [9! . [9		[illegible]	[illegible]	[illegible]	[illegible]
Y9Ð5☞¤hb9 Dw! £	[illegible]	5 ⊡D	D/t	t[w	a ⊡																	{! [9! . [9		[illegible]	[illegible]	[illegible]	[illegible]
Y9Ð/☞6! w/ Dw! £	[illegible]	/ ⊡D	D/t	t[w	a ⊡	ミ	ｨ	ｨ	ə	ゑ	ぇ	ﾊ	ﾆ		ヺ	ヺ	ヺ	ヺ	ヺ	ヺ	ヺ	{! [9! . [9		[illegible]	[illegible]	[illegible]	[illegible]
Y9Ð5☞¤hb9 Dw! £	[illegible]	5 ⊡D	D/t	t[w	a ⊡	ミ	ｨ	ｨ	ə	ゑ	ぇ	ﾊ	ﾆ		ヺ	ヺ	ヺ	ヺ	ヺ	ヺ	ヺ	{! [9! . [9		[illegible]	[illegible]	[illegible]	[illegible]
Y9Ð! ☞[! /Y	[illegible]	! ⊡[Y	D/t	t[w	a ⊡								ﾆ				ヺ	ヺ	ヺ	ヺ	ヺ	{! [9! . [9		[illegible]	[illegible]	[illegible]	[illegible]
Y9Ð! ☞[! /Y	[illegible]	! ⊡[Y	D/t	t[w	a ⊡				ə	ゑ	ぇ	ﾊ	ﾆ		ヺ	ヺ	ヺ	ヺ	ヺ	ヺ	ヺ	{! [9! . [9		[illegible]	[illegible]	[illegible]	[illegible]
Y9Ð! ☞[! /Y	[illegible]	! ⊡[Y	D/t	t[w	a ⊡										ヺ	ヺ	ヺ	ヺ	ヺ	ヺ	ヺ	{! [9! . [9		[illegible]	[illegible]	[illegible]	[illegible]
Y9Ð. ☞[ΙDI ¤Dw! £	[illegible]	. ⊡D	D/t	t[w	a ⊡						ぇ	ﾊ	ﾆ			ヺ						{! [9! . [9		[illegible]	[illegible]	[illegible]	[illegible]
Y9Ð. ☞[ΙDI ¤Dw! £	[illegible]	. ⊡D	D/t	t[w	a ⊡	ミ	ｨ	ｨ	ə	ゑ					ヺ	ヺ	ヺ	ヺ	ヺ	ヺ	ヺ	{! [9! . [9		[illegible]	[illegible]	[illegible]	[illegible]
Y9Ð. ☞[ΙDI ¤Dw! £	[illegible]	. ⊡D	D/t	t[w	a ⊡						ぇ					ヺ	ヺ	ヺ	ヺ	ヺ	ヺ	{! [9! . [9		[illegible]	[illegible]	[illegible]	[illegible]
Y9Ð! ☞[! /Y	[illegible]	! ⊡[Y	D/t	t[w	a ⊡						ぇ				ヺ	ヺ	ヺ	ヺ	ヺ			{! [9! . [9		[illegible]	[illegible]	[illegible]	[illegible]

! { { 9a . [Ð 5 9 (/ wŁ ¤ lhb	! { { 9a . [Ð t ! w¤ b- a . 9w	/ha thb 9b¤			. [h/Y95 ¤9wa lb! [{															{¤! ¤- {	/ha a 9b¤{	ht¤lhb! [! ¤¤! ¤/I a 9b¤{ {h [5 {9t 9w! ¤9{Ð			
		¤I 9 t w9{9b/9 h C ! b ! . . w9" Ł ¤lhb lb5Ł/ ! ¤9{ ¤I 9 t w9{9b/9 h C¤I ! ¤/ha thb 9b¤☆			/! ' ŁÐ° Ł¤I ! b- a . 9w lb5Ł/ ! ¤9{ . [h/Y95 ¤9wa lb! [th{Ł¤lhb /! ' ŁÐ° Ł¤I h- ¤ ! b- a . 9w lb5Ł/ ! ¤9{ ht 9b ¤9wa lb! [th{Ł¤lhb																				
	I h- {ŁbD Y9Ð Ø Łh [hw	Dwha a 9¤ /! t	t[w	a ! ¤{9! [	ろ	わ	わ	ゐ	ゑ	を	ん	ゔ	゛	ゕれ	ゖろ	ゖろ	ゖわ	ゖわ	ゖゐ	ゖゑ	ゖを			. ! / Y{I 9[° Ł¤I wŁ {	. ! / Y{I 9[° Ł¤I h- ¤ wŁ {	れ! 5 ! t ¤hw° Ł¤I wŁ {	れ! 5 ! t ¤hw° Ł¤I h- ¤ wŁ {
Y9Ð ! ¤ [! / Y	ｻｽｾｿﾀﾁﾂﾃｲ	! □ [Y	D/t	t[w	a □	ろ	わ	わ	ゐ	ゑ	を							ゖ	ゖ			{! [9! . [9		ｻｽ ﾀﾁﾂﾃｲ	ｻｽ ﾀﾁﾂﾃｲ	ｻｽ ﾀﾁﾂﾃｲ	ｻｽ ﾀﾁﾂﾃｲ
Y9Ð ! ¤ [! / Y	ｻｽｾｿﾀﾁﾂﾄｱ	! □ [Y	D/t	t[w	a □	ろ	わ	わ	ゐ	ゑ	を				ゕれ	ゖろ	ゖろ	ゖわ	ゖわ	ゖゐ			{! [9! . [9		ｻｽ ﾀﾁﾂﾃｲ	ｻｽ ﾀﾁﾂﾃｲ	ｻｽ ﾀﾁﾂﾃｲ	ｻｽ ﾀﾁﾂﾃｲ
Y9Ð ! ¤ [! / Y	ｻｽｾｿﾀﾁﾂﾄｲ	! □ [Y	D/t	t[w	a □			わ	ゐ							ゖろ	ゖわ					{! [9! . [9		ｻｽ ﾀﾁﾂﾃｲ	ｻｽ ﾀﾁﾂﾃｲ	ｻｽ ﾀﾁﾂﾃｲ	ｻｽ ﾀﾁﾂﾃｲ
Y9Ð ! ¤ [! / Y	ｻｽｾｿﾀﾁﾂﾄｳ	! □ [Y	D/t	t[w	a □																	{! [9! . [9		ｻｽ ﾀﾁﾂﾃｲ	ｻｽ ﾀﾁﾂﾃｲ	ｻｽ ﾀﾁﾂﾃｲ	ｻｽ ﾀﾁﾂﾃｲ
Y9Ð ! ¤ [! / Y	ｻｽｾｿﾀﾁﾂﾄﾅ	! □ [Y	D/t	t[w	a □			わ	ゐ						ゕれ	ゖろ	ゖわ	ゖわ	ゖゐ	ゖゑ	ゖを	{! [9! . [9		ｻｽ ﾀﾁﾂﾃｲ	ｻｽ ﾀﾁﾂﾃｲ	ｻｽ ﾀﾁﾂﾃｲ	ｻｽ ﾀﾁﾂﾃｲ
Y9Ð ! ¤ [! / Y	ｻｽｾｿﾀﾁﾂﾄﾆ	! □ [Y	D/t	t[w	a □											ゖろ	ゖわ	ゖわ	ゖゐ	ゖゑ	ゖを	{! [9! . [9		ｻｽ ﾀﾁﾂﾃｲ	ｻｽ ﾀﾁﾂﾃｲ	ｻｽ ﾀﾁﾂﾃｲ	ｻｽ ﾀﾁﾂﾃｲ
Y9Ð ! ¤ [! / Y	ｻｽｾｿﾀﾁﾂﾄﾇ	! □ [Y	D/t	t[w	a □											ゖろ	ゖわ	ゖわ	ゖゐ	ゖゑ	ゖを	{! [9! . [9		ｻｽ ﾀﾁﾂﾃｲ	ｻｽ ﾀﾁﾂﾃｲ	ｻｽ ﾀﾁﾂﾃｲ	ｻｽ ﾀﾁﾂﾃｲ
Y9Ð ! ¤ [! / Y	ｻｽｾｿﾀﾁﾂﾄﾈ	! □ [Y	D/t	t[w	a □											ゖろ	ゖわ	ゖわ	ゖゐ	ゖゑ	ゖを	{! [9! . [9		ｻｽ ﾀﾁﾂﾃｲ	ｻｽ ﾀﾁﾂﾃｲ	ｻｽ ﾀﾁﾂﾃｲ	ｻｽ ﾀﾁﾂﾃｲ
Y9Ð ! ¤ [! / Y	ｻｽｾｿﾀﾁﾂﾄﾉ	! □ [Y	D/t	t[w	a □											ゖろ	ゖわ	ゖわ	ゖゐ	ゖゑ	ゖを	{! [9! . [9		ｻｽ ﾀﾁﾂﾃｲ	ｻｽ ﾀﾁﾂﾃｲ	ｻｽ ﾀﾁﾂﾃｲ	ｻｽ ﾀﾁﾂﾃｲ
Y9Ð ! ¤ [! / Y	ｻｽｾｿﾀﾁﾂﾄﾊ	! □ [Y	D/t	t[w	a □											ゖろ	ゖわ	ゖわ	ゖゐ	ゖゑ	ゖを	{! [9! . [9		ｻｽ ﾀﾁﾂﾃｲ	ｻｽ ﾀﾁﾂﾃｲ	ｻｽ ﾀﾁﾂﾃｲ	ｻｽ ﾀﾁﾂﾃｲ
Y9Ð ! ¤ [! / Y	ｻｽｾｿﾀﾁﾂﾄﾋ	! □ [Y	D/t	t[w	a □											ゖろ	ゖわ	ゖわ	ゖゐ	ゖゑ	ゖを	{! [9! . [9		ｻｽ ﾀﾁﾂﾃｲ	ｻｽ ﾀﾁﾂﾃｲ	ｻｽ ﾀﾁﾂﾃｲ	ｻｽ ﾀﾁﾂﾃｲ
Y9Ð ! ¤ [! / Y	ｻｽｾｿﾀﾁﾂﾄﾌ	! □ [Y	D/t	t[w	a □											ゖろ	ゖわ	ゖわ	ゖゐ	ゖゑ	ゖを	{! [9! . [9		ｻｽ ﾀﾁﾂﾃｲ	ｻｽ ﾀﾁﾂﾃｲ	ｻｽ ﾀﾁﾂﾃｲ	ｻｽ ﾀﾁﾂﾃｲ
Y9Ð ! ¤ [! / Y	ｻｽｾｿﾀﾁﾂﾄﾍ	! □ [Y	D/t	t[w	a □											ゖろ	ゖわ	ゖわ	ゖゐ	ゖゑ	ゖを	{! [9! . [9		ｻｽ ﾀﾁﾂﾃｲ	ｻｽ ﾀﾁﾂﾃｲ	ｻｽ ﾀﾁﾂﾃｲ	ｻｽ ﾀﾁﾂﾃｲ
Y9Ð ! ¤ [! / Y	ｻｽｾｿﾀﾁﾂﾄﾎ	! □ [Y	D/t	t[w	a □											ゖろ	ゖわ	ゖわ	ゖゐ	ゖゑ	ゖを	{! [9! . [9		ｻｽ ﾀﾁﾂﾃｲ	ｻｽ ﾀﾁﾂﾃｲ	ｻｽ ﾀﾁﾂﾃｲ	ｻｽ ﾀﾁﾂﾃｲ
Y9Ð ! ¤ [! / Y	ｻｽｾｿﾀﾁﾂﾄﾏ	! □ [Y	D/t	t[w	a □											ゖろ	ゖわ	ゖわ	ゖゐ	ゖゑ	ゖを	{! [9! . [9		ｻｽ ﾀﾁﾂﾃｲ	ｻｽ ﾀﾁﾂﾃｲ	ｻｽ ﾀﾁﾂﾃｲ	ｻｽ ﾀﾁﾂﾃｲ
Y9Ð ! ¤ [! / Y	ｻｽｾｿﾀﾁﾂﾄﾐ	! □ [Y	D/t	t[w	a □											ゖろ	ゖわ	ゖわ	ゖゐ	ゖゑ	ゖを	{! [9! . [9		ｻｽ ﾀﾁﾂﾃｲ	ｻｽ ﾀﾁﾂﾃｲ	ｻｽ ﾀﾁﾂﾃｲ	ｻｽ ﾀﾁﾂﾃｲ
Y9Ð ! ¤ [! / Y	ｻｽｾｿﾀﾁﾂﾄﾑ	! □ [Y	D/t	t[w	a □											ゖろ	ゖわ	ゖわ	ゖゐ	ゖゑ	ゖを	{! [9! . [9		ｻｽ ﾀﾁﾂﾃｲ	ｻｽ ﾀﾁﾂﾃｲ	ｻｽ ﾀﾁﾂﾃｲ	ｻｽ ﾀﾁﾂﾃｲ
Y9Ð ! ¤ [! / Y	ｻｽｾｿﾀﾁﾂﾄﾒ	! □ [Y	D/t	t[w	a □											ゖろ	ゖわ	ゖわ	ゖゐ	ゖゑ	ゖを	{! [9! . [9		ｻｽ ﾀﾁﾂﾃｲ	ｻｽ ﾀﾁﾂﾃｲ	ｻｽ ﾀﾁﾂﾃｲ	ｻｽ ﾀﾁﾂﾃｲ
Y9Ð ! ¤ [! / Y	ｻｽｾｿﾀﾁﾂﾄﾓ	! □ [Y	D/t	t[w	a □											ゖろ	ゖわ	ゖわ	ゖゐ	ゖゑ	ゖを	{! [9! . [9		ｻｽ ﾀﾁﾂﾃｲ	ｻｽ ﾀﾁﾂﾃｲ	ｻｽ ﾀﾁﾂﾃｲ	ｻｽ ﾀﾁﾂﾃｲ
Y9Ð ! ¤ [! / Y	ｻｽｾｿﾀﾁﾂﾄﾔ	! □ [Y	D/t	t[w	a □											ゖろ	ゖわ	ゖわ	ゖゐ	ゖゑ	ゖを	{! [9! . [9		ｻｽ ﾀﾁﾂﾃｲ	ｻｽ ﾀﾁﾂﾃｲ	ｻｽ ﾀﾁﾂﾃｲ	ｻｽ ﾀﾁﾂﾃｲ
Y9Ð ! ¤ [! / Y	ｻｽｾｿﾀﾁﾂﾄﾕ	! □ [Y	D/t	t[w	a □											ゖろ	ゖわ	ゖわ	ゖゐ	ゖゑ	ゖを	{! [9! . [9		ｻｽ ﾀﾁﾂﾃｲ	ｻｽ ﾀﾁﾂﾃｲ	ｻｽ ﾀﾁﾂﾃｲ	ｻｽ ﾀﾁﾂﾃｲ
Y9Ð ! ¤ [! / Y	ｻｽｾｿﾀﾁﾂﾄﾖ	! □ [Y	D/t	t[w	a □											ゖろ	ゖわ	ゖわ	ゖゐ	ゖゑ	ゖを	{! [9! . [9		ｻｽ ﾀﾁﾂﾃｲ	ｻｽ ﾀﾁﾂﾃｲ	ｻｽ ﾀﾁﾂﾃｲ	ｻｽ ﾀﾁﾂﾃｲ
Y9Ð ! ¤ [! / Y	ｻｽｾｿﾀﾁﾂﾄﾗ	! □ [Y	D/t	t[w	a □											ゖろ	ゖわ	ゖわ	ゖゐ	ゖゑ	ゖを	{! [9! . [9		ｻｽ ﾀﾁﾂﾃｲ	ｻｽ ﾀﾁﾂﾃｲ	ｻｽ ﾀﾁﾂﾃｲ	ｻｽ ﾀﾁﾂﾃｲ
Y9Ð ! ¤ [! / Y	ｻｽｾｿﾀﾁﾂﾄﾘ	! □ [Y	D/t	t[w	a □											ゖろ	ゖわ	ゖわ	ゖゐ	ゖゑ	ゖを	{! [9! . [9		ｻｽ ﾀﾁﾂﾃｲ	ｻｽ ﾀﾁﾂﾃｲ	ｻｽ ﾀﾁﾂﾃｲ	ｻｽ ﾀﾁﾂﾃｲ
Y9Ð ! ¤ [! / Y	ｻｽｾｿﾀﾁﾂﾄﾙ	! □ [Y	D/t	t[w	a □											ゖろ	ゖわ	ゖわ	ゖゐ	ゖゑ	ゖを	{! [9! . [9		ｻｽ ﾀﾁﾂﾃｲ	ｻｽ ﾀﾁﾂﾃｲ	ｻｽ ﾀﾁﾂﾃｲ	ｻｽ ﾀﾁﾂﾃｲ
Y9Ð ! ¤ [! / Y	ｻｽｾｿﾀﾁﾂﾄﾚ	! □ [Y	D/t	t[w	a □											ゖろ	ゖわ	ゖわ	ゖゐ	ゖゑ	ゖを	{! [9! . [9		ｻｽ ﾀﾁﾂﾃｲ	ｻｽ ﾀﾁﾂﾃｲ	ｻｽ ﾀﾁﾂﾃｲ	ｻｽ ﾀﾁﾂﾃｲ
Y9Ð ! ¤ [! / Y	ｻｽｾｿﾀﾁﾂﾄﾛ	! □ [Y	D/t	t[w	a □											ゖろ	ゖわ	ゖわ	ゖゐ	ゖゑ	ゖを	{! [9! . [9		ｻｽ ﾀﾁﾂﾃｲ	ｻｽ ﾀﾁﾂﾃｲ	ｻｽ ﾀﾁﾂﾃｲ	ｻｽ ﾀﾁﾂﾃｲ
Y9Ð ! ¤ [! / Y	ｻｽｾｿﾀﾁﾂﾄﾜ	! □ [Y	D/t	t[w	a □											ゖろ	ゖわ	ゖわ	ゖゐ	ゖゑ	ゖを	{! [9! . [9		ｻｽ ﾀﾁﾂﾃｲ	ｻｽ ﾀﾁﾂﾃｲ	ｻｽ ﾀﾁﾂﾃｲ	ｻｽ ﾀﾁﾂﾃｲ
Y9Ð ! ¤ [! / Y	ｻｽｾｿﾀﾁﾂﾄﾝ	! □ [Y	D/t	t[w	a □											ゖろ	ゖわ	ゖわ	ゖゐ	ゖゑ	ゖを	{! [9! . [9		ｻｽ ﾀﾁﾂﾃｲ	ｻｽ ﾀﾁﾂﾃｲ	ｻｽ ﾀﾁﾂﾃｲ	ｻｽ ﾀﾁﾂﾃｲ
Y9Ð ! ¤ [! / Y	ｻｽｾｿﾀﾁﾂﾄﾞ	! □ [Y	D/t	t[w	a □											ゖろ	ゖわ	ゖわ	ゖゐ	ゖゑ	ゖを	{! [9! . [9		ｻｽ ﾀﾁﾂﾃｲ	ｻｽ ﾀﾁﾂﾃｲ	ｻｽ ﾀﾁﾂﾃｲ	ｻｽ ﾀﾁﾂﾃｲ
Y9Ð ! ¤ [! / Y	ｻｽｾｿﾀﾁﾂﾄﾟ	! □ [Y	D/t	t[w	a □											ゖろ	ゖわ	ゖわ	ゖゐ	ゖゑ	ゖを	{! [9! . [9		ｻｽ ﾀﾁﾂﾃｲ	ｻｽ ﾀﾁﾂﾃｲ	ｻｽ ﾀﾁﾂﾃｲ	ｻｽ ﾀﾁﾂﾃｲ
Y9Ð ! ¤ [! / Y	ｻｽｾｿﾀﾁﾂﾄﾠ	! □ [Y	D/t	t[w	a □											ゖろ	ゖわ	ゖわ	ゖゐ	ゖゑ	ゖを	{! [9! . [9		ｻｽ ﾀﾁﾂﾃｲ	ｻｽ ﾀﾁﾂﾃｲ	ｻｽ ﾀﾁﾂﾃｲ	ｻｽ ﾀﾁﾂﾃｲ
Y9Ð ! ¤ [! / Y	ｻｽｾｿﾀﾁﾂﾄﾡ	! □ [Y	D/t	t[w	a □											ゖろ	ゖわ	ゖわ	ゖゐ	ゖゑ	ゖを	{! [9! . [9		ｻｽ ﾀﾁﾂﾃｲ	ｻｽ ﾀﾁﾂﾃｲ	ｻｽ ﾀﾁﾂﾃｲ	ｻｽ ﾀﾁﾂﾃｲ
Y9Ð ! ¤ [! / Y	ｻｽｾｿﾀﾁﾂﾄﾢ	! □ [Y	D/t	t[w	a □											ゖろ	ゖわ	ゖわ	ゖゐ	ゖゑ	ゖを	{! [9! . [9		ｻｽ ﾀﾁﾂﾃｲ	ｻｽ ﾀﾁﾂﾃｲ	ｻｽ ﾀﾁﾂﾃｲ	ｻｽ ﾀﾁﾂﾃｲ
Y9Ð ! ¤ [! / Y	ｻｽｾｿﾀﾁﾂﾄﾣ	! □ [Y	D/t	t[w	a □											ゖろ	ゖわ	ゖわ	ゖゐ	ゖゑ	ゖを	{! [9! . [9		ｻｽ ﾀﾁﾂﾃｲ	ｻｽ ﾀﾁﾂﾃｲ	ｻｽ ﾀﾁﾂﾃｲ	ｻｽ ﾀﾁﾂﾃｲ
Y9Ð ! ¤ [! / Y	ｻｽｾｿﾀﾁﾂﾄﾤ	! □ [Y	D/t	t[w	a □											ゖろ	ゖわ	ゖわ	ゖゐ	ゖゑ	ゖを	{! [9! . [9		ｻｽ ﾀﾁﾂﾃｲ	ｻｽ ﾀﾁﾂﾃｲ	ｻｽ ﾀﾁﾂﾃｲ	ｻｽ ﾀﾁﾂﾃｲ
Y9Ð ! ¤ [! / Y	ｻｽｾｿﾀﾁﾂﾄﾥ	! □ [Y	D/t	t[w	a □											ゖろ	ゖわ	ゖわ	ゖゐ	ゖゑ	ゖを	{! [9! . [9		ｻｽ ﾀﾁﾂﾃｲ	ｻｽ ﾀﾁﾂﾃｲ	ｻｽ ﾀﾁﾂﾃｲ	ｻｽ ﾀﾁﾂﾃｲ
Y9Ð ! ¤ [! / Y	ｻｽｾｿﾀﾁﾂﾄﾦ	! □ [Y	D/t	t[w	a □											ゖろ	ゖわ	ゖわ	ゖゐ	ゖゑ	ゖを	{! [9! . [9		ｻｽ ﾀﾁﾂﾃｲ	ｻｽ ﾀﾁﾂﾃｲ	ｻｽ ﾀﾁﾂﾃｲ	ｻｽ ﾀﾁﾂﾃｲ
Y9Ð ! ¤ [! / Y	ｻｽｾｿﾀﾁﾂﾄﾧ	! □ [Y	D/t	t[w	a □											ゖろ	ゖわ	ゖわ	ゖゐ	ゖゑ	ゖを	{! [9! . [9		ｻｽ ﾀﾁﾂﾃｲ	ｻｽ ﾀﾁﾂﾃｲ	ｻｽ ﾀﾁﾂﾃｲ	ｻｽ ﾀﾁﾂﾃｲ
Y9Ð ! ¤ [! / Y	ｻｽｾｿﾀﾁﾂﾄﾨ	! □ [Y	D/t	t[w	a □											ゖろ	ゖわ	ゖわ	ゖゐ	ゖゑ	ゖを	{! [9! . [9		ｻｽ ﾀﾁﾂﾃｲ	ｻｽ ﾀﾁﾂﾃｲ	ｻｽ ﾀﾁﾂﾃｲ	ｻｽ ﾀﾁﾂﾃｲ
Y9Ð . ¤ [Ð I ¤ Dw Ł	ｻｽｾｿﾀﾁﾂﾄｵ	. [Ð D	D/t	t[w	a □											ゖろ	ゖわ	ゖわ	ゖゐ	ゖゑ	ゖを	{! [9! . [9		ｻｽ ﾀﾁﾂﾃｲ	ｻｽ ﾀﾁﾂﾃｲ	ｻｽ ﾀﾁﾂﾃｲ	ｻｽ ﾀﾁﾂﾃｲ
Y9Ð ! ¤ [! / Y	ｻｽｾｿﾀﾁﾂﾄｶ	! □ [Y	D/t	t[w	a □											ゖろ	ゖわ	ゖわ	ゖゐ	ゖゑ	ゖを	{! [9! . [9		ｻｽ ﾀﾁﾂﾃｲ	ｻｽ ﾀﾁﾂﾃｲ	ｻｽ ﾀﾁﾂﾃｲ	ｻｽ ﾀﾁﾂﾃｲ
Y9Ð ! ¤ [! / Y	ｻｽｾｿﾀﾁﾂﾄｷ	! □ [Y	D/t	t[w	a □											ゖろ	ゖわ	ゖわ	ゖゐ	ゖゑ	ゖを	{! [9! . [9		ｻｽ ﾀﾁﾂﾃｲ	ｻｽ ﾀﾁﾂﾃｲ	ｻｽ ﾀﾁﾂﾃｲ	ｻｽ ﾀﾁﾂﾃｲ
Y9Ð ! ¤ [! / Y	ｻｽｾｿﾀﾁﾂﾄｸ	! □ [Y	D/t	t[w	a □											ゖろ	ゖわ	ゖわ	ゖゐ	ゖゑ	ゖを	{! [9! . [9		ｻｽ ﾀﾁﾂﾃｲ	ｻｽ ﾀﾁﾂﾃｲ	ｻｽ ﾀﾁﾂﾃｲ	ｻｽ ﾀﾁﾂﾃｲ

9/ b bh ☆ゑゐ ゔ ゕ ゖ .
5! ¤9 ゃ ぢ ぶ ぃ ぁ ぅ ぇ

5h/ - a 9b ¤ bh ☆ (5 [ｻｽｾｿﾀﾁﾂﾃｲ ｳｴｵｶｷｸｹｺｻｼ

molex

a AEƵ¤ƙ¼ƙÆƵ [! 5 9 { 9! [95 ! { { Ða ! ¤ { 9! [
. ha ! b5 t lb h- ¤ { I 99¤

| ! {{ 9a . [Ð 5 9 (/ wlt ¤ lhb | ! {{ 9a . [Ðt ! w¤ b- a . 9w | /ha thb9b¤ | | | | . [h/Y95 ¤9wa lb! [{ | | | | | | | | | | | | | | {¤! ¤- { | /ha a 9b¤{ | ht¤hb! [! ¤¤! ¤/ I a 9b¤{ { h [5 { 9t 9w! ¤9 [Ð | | | |
|---|---|---

a ÆΞ3ð れゎÆΞ3ゔ [! 59{9! [95 ! {{Ða ! ¤{9! [
. ha ! b5 t Lb h- ¤ {I 99¤

! {{9a . [Ð59{/wLt¤Lhb	! {{9a . [Ðt! w¤ b- a . 9w	/ha thb9b¤ — ¤I 9 tw9{9b/9 hC! b ! . . w9¹ L! ¤Lhb Lb5L/! ¤9{ ¤I 9 tw9{9b/9 hC¤I ! ¤/ha thb9b¤ — I h- {LbD Y9Ð⚓h[hw	Dwha a 9¤ /! t	t[w	a ! ¤{9! [	. [h/Y95 ¤9wa Lb! [{ — /! ¹ L¤Ð° L¤I ! b- a . 9wLb5L/! ¤9{ . [h/Y95 ¤9wa Lb! [t h{L¤Lhb / /! ¹ L¤Ð° L¤I h- ¤! b- a . 9wLb5L/! ¤9{ ht 9b ¤9wa Lb! [t h{L¤Lhb — ろ	ゎ	わ	ゐ	ゑ	を	ん	ゔ	゛	3れ	33	3ゎ	3わ	3ゐ	3ゑ	3を	{¤! ¤- {	/ha a 9b¤{	ht¤Lhb! [! ¤¤! ¤/I a 9b¤{ {h[5 {9t 9w! ¤9[Ð — . ! /Y{I 9[[° L¤I wL {	. ! /Y{I 9[[° L¤I h- ¤ wL {	れ! 5! t¤hw° L¤I wL {	れ! 5! t¤hw° L¤I h- ¤ wL {
Y9Ð! ☞[! /Y	[illegible]	! ⊡[Y	D/t	t[w	a ⊡				[illegible]			[illegible]	[illegible]		[illegible]		[illegible]			[illegible]	[illegible]	{! [9! . [9		[illegible]	[illegible]	[illegible]	[illegible]
Y9Ð! ☞[! /Y	[illegible]	! ⊡[Y	D/t	t[w	a ⊡				[illegible]			[illegible]	[illegible]				[illegible]					{! [9! . [9		[illegible]	[illegible]	[illegible]	[illegible]
Y9Ð! ☞[! /Y	[illegible]	! ⊡[Y	D/t	t[w	a ⊡						[illegible]	[illegible]	[illegible]		[illegible]	[illegible]	[illegible]			[illegible]	[illegible]	{! [9! . [9		[illegible]	[illegible]	[illegible]	[illegible]
Y9Ð! ☞[! /Y	[illegible]	! ⊡[Y	D/t	t[w	a ⊡	[illegible]	[illegible]	[illegible]	[illegible]	[illegible]												{! [9! . [9		[illegible]	[illegible]	[illegible]	[illegible]
Y9Ð! ☞[! /Y	[illegible]	! ⊡[Y	D/t	t[w	a ⊡							[illegible]	[illegible]				[illegible]			[illegible]	[illegible]	{! [9! . [9		[illegible]	[illegible]	[illegible]	[illegible]
Y9Ð! ☞[! /Y	[illegible]	! ⊡[Y	D/t	t[w	a ⊡	[illegible]		[illegible]	[illegible]								[illegible]	[illegible]				{! [9! . [9		[illegible]	[illegible]	[illegible]	[illegible]
Y9Ð! ☞[! /Y	[illegible]	! ⊡[Y	D/t	t[w	a ⊡	[illegible]	[illegible]												[illegible]	[illegible]	[illegible]	{! [9! . [9		[illegible]	[illegible]	[illegible]	[illegible]
Y9Ð! ☞[! /Y	[illegible]	! ⊡[Y	D/t	t[w	a ⊡				[illegible]		[illegible]	[illegible]	[illegible]		[illegible]	[illegible]	[illegible]					{! [9! . [9		[illegible]	[illegible]	[illegible]	[illegible]
Y9Ð! ☞[! /Y	[illegible]	! ⊡[Y	D/t	t[w	a ⊡	[illegible]	[illegible]	[illegible]	[illegible]		[illegible]	[illegible]	[illegible]		[illegible]	[illegible]	[illegible]			[illegible]	[illegible]	{! [9! . [9		[illegible]	[illegible]	[illegible]	[illegible]
Y9Ð! ☞[! /Y	[illegible]	! ⊡[Y	D/t	t[w	a ⊡	[illegible]	[illegible]	[illegible]	[illegible]			[illegible]	[illegible]				[illegible]			[illegible]	[illegible]	{! [9! . [9		[illegible]	[illegible]	[illegible]	[illegible]
Y9Ð! ☞[! /Y	[illegible]	! ⊡[Y	D/t	t[w	a ⊡						[illegible]	[illegible]	[illegible]		[illegible]	[illegible]	[illegible]					{! [9! . [9		[illegible]	[illegible]	[illegible]	[illegible]
Y9Ð! ☞[! /Y	[illegible]	! ⊡[Y	D/t	t[w	a ⊡	[illegible]	[illegible]	[illegible]			[illegible]	[illegible]	[illegible]		[illegible]	[illegible]	[illegible]			[illegible]	[illegible]	{! [9! . [9		[illegible]	[illegible]	[illegible]	[illegible]
Y9Ð! ☞[! /Y	[illegible]	! ⊡[Y	D/t	t[w	a ⊡	[illegible]	[illegible]		[illegible]								[illegible]	[illegible]				{! [9! . [9		[illegible]	[illegible]	[illegible]	[illegible]
Y9Ð! ☞[! /Y	[illegible]	! ⊡[Y	D/t	t[w	a ⊡		[illegible]	[illegible]	[illegible]	[illegible]												{! [9! . [9		[illegible]	[illegible]	[illegible]	[illegible]
Y9Ð! ☞[! /Y	[illegible]	! ⊡[Y	D/t	t[w	a ⊡		[illegible]	[illegible]	[illegible]	[illegible]					[illegible]	[illegible]	[illegible]	[illegible]	[illegible]	[illegible]		{! [9! . [9		[illegible]	[illegible]	[illegible]	[illegible]
Y9Ð! ☞[! /Y	[illegible]	! ⊡[Y	D/t	t[w	a ⊡															[illegible]	[illegible]	{! [9! . [9		[illegible]	[illegible]	[illegible]	[illegible]
Y9Ð! ☞[! /Y	[illegible]	! ⊡[Y	D/t	t[w	a ⊡											[illegible]	[illegible]	[illegible]	[illegible]	[illegible]	[illegible]	{! [9! . [9		[illegible]	[illegible]	[illegible]	[illegible]
Y9Ð! ☞[! /Y	[illegible]	! ⊡[Y	D/t	t[w	a ⊡						[illegible]	[illegible]			[illegible]	[illegible]	[illegible]	[illegible]	[illegible]	[illegible]	[illegible]	{! [9! . [9		[illegible]	[illegible]	[illegible]	[illegible]
Y9Ð! ☞[! /Y	[illegible]	! ⊡[Y	D/t	t[w	a ⊡										[illegible]	[illegible]	[illegible]	[illegible]	[illegible]	[illegible]		{! [9! . [9		[illegible]	[illegible]	[illegible]	[illegible]
Y9Ð! ☞[! /Y	[illegible]	! ⊡[Y	D/t	t[w	a ⊡						[illegible]		[illegible]		[illegible]	[illegible]	[illegible]			[illegible]		{! [9! . [9		[illegible]	[illegible]	[illegible]	[illegible]
Y9Ð! ☞[! /Y	[illegible]	! ⊡[Y	D/t	t[w	a ⊡						[illegible]		[illegible]							[illegible]		{! [9! . [9		[illegible]	[illegible]	[illegible]	[illegible]
Y9Ð! ☞[! /Y	[illegible]	! ⊡[Y	D/t	t[w	a ⊡			[illegible]	[illegible]	[illegible]	[illegible]		[illegible]		[illegible]	[illegible]	[illegible]			[illegible]		{! [9! . [9		[illegible]	[illegible]	[illegible]	[illegible]
Y9Ð! ☞[! /Y	[illegible]	! ⊡[Y	D/t	t[w	a ⊡			[illegible]	[illegible]	[illegible]	[illegible]		[illegible]							[illegible]		{! [9! . [9		[illegible]	[illegible]	[illegible]	[illegible]
Y9Ð! ☞[! /Y	[illegible]	! ⊡[Y	D/t	t[w	a ⊡			[illegible]	[illegible]				[illegible]		[illegible]	[illegible]	[illegible]					{! [9! . [9		[illegible]	[illegible]	[illegible]	[illegible]
Y9Ð! ☞[! /Y	[illegible]	! ⊡[Y	D/t	t[w	a ⊡			[illegible]	[illegible]				[illegible]									{! [9! . [9		[illegible]	[illegible]	[illegible]	[illegible]
Y9Ð! ☞[! /Y	[illegible]	! ⊡[Y	D/t	t[w	a ⊡								[illegible]		[illegible]	[illegible]	[illegible]					{! [9! . [9		[illegible]	[illegible]	[illegible]	[illegible]
Y9Ð! ☞[! /Y	[illegible]	! ⊡[Y	D/t	t[w	a ⊡	[illegible]	[illegible]	[illegible]			[illegible]	[illegible]	[illegible]		[illegible]	[illegible]			[illegible]		[illegible]	{! [9! . [9		[illegible]	[illegible]	[illegible]	[illegible]
Y9Ð! ☞[! /Y	[illegible]	! ⊡[Y	D/t	t[w	a ⊡		[illegible]	[illegible]			[illegible]	[illegible]			[illegible]	[illegible]			[illegible]			{! [9! . [9		[illegible]	[illegible]	[illegible]	[illegible]
Y9Ð! ☞[! /Y	[illegible]	! ⊡[Y	D/t	t[w	a ⊡		[illegible]				[illegible]	[illegible]			[illegible]				[illegible]			{! [9! . [9		[illegible]	[illegible]	[illegible]	[illegible]

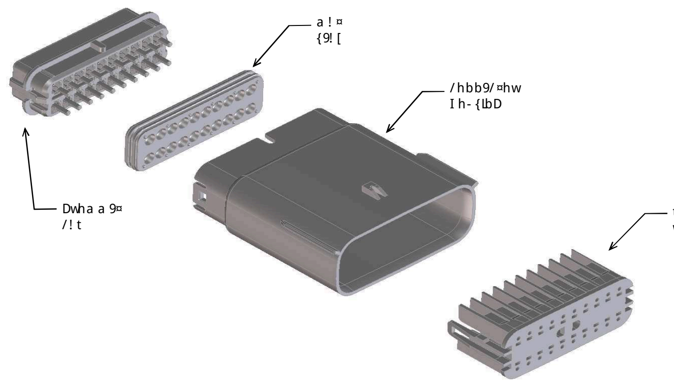

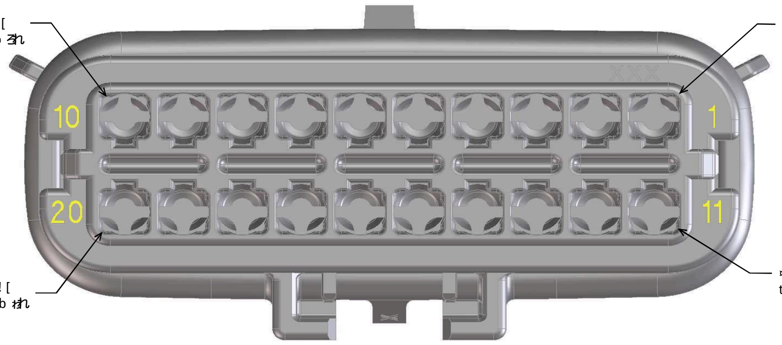
10
1
20
11

molex

a ÆƵ₩ʭʭ₳ÆƵ₩ʭ [! 59{9! [95 ! {{Ða ! ¤ {9! [. ha ! b5 t⊔b h- ¤ {I 99¤

! {{9a . [Ð59{/wŁt ¤⊔hb	! {{9a . [Ðt ! w⇌ b- a . 9w	/ha thb9b¤				. [h/Y95 ¤9wa lb! [{															{¤! ¤- {	/ha a 9b¤{	ht¤⊔hb! [! ¤¤! ¤/ I a 9b¤{ {h[5 {9t 9wŁ ¤9{Ð			
		¤I 9t wß{9b/9hC! b ! . . wß! Ł ¤⊔hb lb5Ł/ ! ¤9{ ¤I 9 t w ß{9b/9hC¤I ! ¤/ha thb9b¤☆				/! ¹ ⊔⇌Ð° ⊔¤I ! b- a . 9wlb5Ł/ ! ¤9{ . [h/Y95 ¤9wa lb! [t h{⊔¤⊔hb /! ¹ ⊔⇌Ð° ⊔¤I h- ¤! b- a . 9wlb5Ł/ ! ¤9{ ht 9b ¤9wa lb! [t h{⊔¤⊔hb																					
		I h- {lbD Y9ÐŁ⊔Łh[hw	Dwha a 9¤ /! t	t[w	a ! ¤{9! [	ろ	わ	わ	ゐ	ゑ	を	ん	ゔ	゛	ヺ	ヸ	ヷ	ヹ	ヺ	・	ー	ヽ	ヾ	ヿ	ㇰ	ㇱ	ㇲ	ㇳ	ㇴ	ㇵ
Y9Ð! ⇌ [! / Y	ｻｵｽﾗｲｶﾞｲﾃﾞｨ	! □[Y	D/t	t[w	a ◫	ｦ		ｬ	ｧ				ﾞ		ｿﾈ	ﾀﾏ		ﾃｨ	ﾃｪ	ﾃｫ				ｽﾗ	ｽﾘ	ﾛ゛	ｵｲ			
Y9Ð! ⇌ [! / Y	ｻｵｽﾗｲｶﾞｲﾃﾞ	! □[Y	D/t	t[w	a ◫	ｦ							ﾞ		ｿﾈ	ﾀﾏ										ﾛ゛	ｵｲ			
Y9Ð! ⇌ [! / Y	ｻｵｽﾗｲｶﾞｲﾃﾞ	! □[Y	D/t	t[w	a ◫	ｦ											ﾏｨ													
Y9Ð! ⇌ [! / Y	ｻｵｽﾗｲｶﾞｲﾃﾞ	! □[Y	D/t	t[w	a ◫	ｦ																		ﾛ゛						
Y9Ð! ⇌ [! / Y	ｻｵｽﾗｲｶﾞｲﾃﾞ	! □[Y	D/t	t[w	a ◫		ｯ	ｯ		ｷ									ﾃｪ							ﾛ゛	ｵｲ			
Y9Ð! ⇌ [! / Y	ｻｵｽﾗｲｶﾞｳﾞ	! □[Y	D/t	t[w	a ◫	ｦ											ﾏｨ	ﾏｫ							ﾛ゛					
Y9Ð! ⇌ [! / Y	ｻｵｽﾗｲｶﾞｴ	! □[Y	D/t	t[w	a ◫	ｦ		ｯ	ｯ	ｷ	ｦ	ﾊ	ﾞ						ﾏｨ	ﾏｫ						ﾛ゛				
Y9Ð! ⇌ [! / Y	ｻｵｽﾗｲｶﾞｵ	! □[Y	D/t	t[w	a ◫	ｦ	ｯ	ｯ	ｧ	ｷ	ｦ	ﾊ	ﾞ				ﾏｨ	ﾏｫ	ﾃｪ	ﾃｫ	ﾃｬ				ﾛ゛					
Y9Ð! ⇌ [! / Y	ｻｵｽﾗｲｶﾞｶﾟ	! □[Y	D/t	t[w	a ◫	ｦ	ｯ	ｯ	ｧ	ｷ	ｦ	ﾊ	ﾞ		ｿﾈ	ﾀﾏ	ﾏｨ	ﾏｫ	ﾃｪ	ﾃｫ	ﾃｬ				ｽﾗ	ｽﾘ	ﾛ゛	ｵｲ		
Y9Ð! ⇌ [! / Y	ｻｵｽﾗｲｶﾞｷ	! □[Y	D/t	t[w	a ◫																									
Y9Ð! ⇌ [! / Y	ｻｵｽﾗｲｶﾞｹ	! □[Y	D/t	t[w	a ◫				ｧ	ｷ	ｦ	ﾊ																		
Y9Ð! ⇌ [! / Y	ｻｵｽﾗｲｶﾞｺ	! □[Y	D/t	t[w	a ◫	ｦ	ｯ	ｯ	ｧ	ｷ	ｦ	ﾊ	ﾞ		ｿﾈ	ﾀﾏ	ﾏｨ	ﾏｫ	ﾃｪ	ﾃｫ	ﾃｬ				ｽﾗ	ｽﾘ	ﾛ゛	ｵｲ		
Y9Ð! ⇌ [! / Y	ｻｵｽﾗｲｶﾞｻ	! □[Y	D/t	t[w	a ◫																									
Y9Ð! ⇌ [! / Y	ｻｵｽﾗｲｶﾞｼ	! □[Y	D/t	t[w	a ◫																									
Y9Ð! ⇌ [! / Y	ｻｵｽﾗｲｶﾞｽ	! □[Y	D/t	t[w	a ◫																									
Y9Ð! ⇌ [! / Y	ｻｵｽﾗｲｶﾞｾ	! □[Y	D/t	t[w	a ◫				ｧ	ｷ	ｦ	ﾊ																		
Y9Ð! ⇌ [! / Y	ｻｵｽﾗｲｶﾞｿ	! □[Y	D/t	t[w	a ◫																									
Y9Ð! ⇌ [! / Y	ｻｵｽﾗｲｶﾞﾀ	! □[Y	D/t	t[w	a ◫																									
Y9Ð! ⇌ [! / Y	ｻｵｽﾗｲｶﾞﾁ	! □[Y	D/t	t[w	a ◫																									
Y9Ð! ⇌ [! / Y	ｻｵｽﾗｲｶﾞﾂ	! □[Y	D/t	t[w	a ◫																									
Y9Ð! ⇌ [! / Y	ｻｵｽﾗｲｶﾞﾃ	! □[Y	D/t	t[w	a ◫																									
Y9Ð! ⇌ [! / Y	ｻｵｽﾗｲｶﾞﾄ	! □[Y	D/t	t[w	a ◫																									
Y9Ð! ⇌ [! / Y	ｻｵｽﾗｲｶﾞﾅ	! □[Y	D/t	t[w	a ◫																									
Y9Ð! ⇌ [! / Y	ｻｵｽﾗｲｶﾞﾆ	! □[Y	D/t	t[w	a ◫																									
Y9Ð! ⇌ [! / Y	ｻｵｽﾗｲｶﾞﾇ	! □[Y	D/t	t[w	a ◫																									
Y9Ð! ⇌ [! / Y	ｻｵｽﾗｲｶﾞﾈ	! □[Y	D/t	t[w	a ◫																									
Y9Ð! ⇌ [! / Y	ｻｵｽﾗｲｶﾞﾉ	! □[Y	D/t	t[w	a ◫																									
Y9Ð! ⇌ [! / Y	ｻｵｽﾗｲｶﾞﾊ	! □[Y	D/t	t[w	a ◫																									
Y9Ð! ⇌ [! / Y	ｻｵｽﾗｲｶﾞﾋ	! □[Y	D/t	t[w	a ◫																									
Y9Ð! ⇌ [! / Y	ｻｵｽﾗｲｶﾞﾌ	! □[Y	D/t	t[w	a ◫																									
Y9Ð! ⇌ [! / Y	ｻｵｽﾗｲｶﾞﾍ	! □[Y	D/t	t[w	a ◫																									
Y9Ð! ⇌ [! / Y	ｻｵｽﾗｲｶﾞﾎ	! □[Y	D/t	t[w	a ◫																									
Y9Ð! ⇌ [! / Y	ｻｵｽﾗｲｶﾞﾏ	! □[Y	D/t	t[w	a ◫																									
Y9Ð! ⇌ [! / Y	ｻｵｽﾗｲｶﾞﾐ	! □[Y	D/t	t[w	a ◫																									
Y9Ð! ⇌ [! / Y	ｻｵｽﾗｲｶﾞﾑ	! □[Y	D/t	t[w	a ◫																									
Y9Ð! ⇌ [! / Y	ｻｵｽﾗｲｶﾞﾒ	! □[Y	D/t	t[w	a ◫																									
Y9Ð! ⇌ [! / Y	ｻｵｽﾗｲｶﾞﾓ	! □[Y	D/t	t[w	a ◫																									
Y9Ð! ⇌ [! / Y	ｻｵｽﾗｲｶﾞﾔ	! □[Y	D/t	t[w	a ◫																									
Y9Ð! ⇌ [! / Y	ｻｵｽﾗｲｶﾞﾕ	! □[Y	D/t	t[w	a ◫																									
Y9Ð! ⇌ [! / Y	ｻｵｽﾗｲｶﾞﾖ	! □[Y	D/t	t[w	a ◫																									
Y9Ð! ⇌ [! / Y	ｻｵｽﾗｲｶﾞﾗ	! □[Y	D/t	t[w	a ◫																									
Y9Ð! ⇌ [! / Y	ｻｵｽﾗｲｶﾞﾘ	! □[Y	D/t	t[w	a ◫																									
Y9Ð! ⇌ [! / Y	ｻｵｽﾗｲｶﾞﾙ	! □[Y	D/t	t[w	a ◫																									
Y9Ð! ⇌ [! / Y	ｻｵｽﾗｲｶﾞﾚ	! □[Y	D/t	t[w	a ◫																									
Y9Ð! ⇌ [! / Y	ｻｵｽﾗｲｶﾞﾛ	! □[Y	D/t	t[w	a ◫																									
Y9Ð! ⇌ [! / Y	ｻｵｽﾗｲｶﾞﾜ	! □[Y	D/t	t[w	a ◫																									
Y9Ð! ⇌ [! / Y	ｻｵｽﾗｲｶﾞﾝ	! □[Y	D/t	t[w	a ◫																									
Y9Ð! ⇌ [! / Y	ｻｵｽﾗｲｶﾞﾞ	! □[Y	D/t	t[w	a ◫																									
Y9Ð! ⇌ [! / Y	ｻｵｽﾗｲｶﾞﾟ	! □[Y	D/t	t[w	a ◫																									
Y9Ð! ⇌ [! / Y	ｻｵｽﾗｲｶﾞｧ	! □[Y	D/t	t[w	a ◫																									
Y9Ð! ⇌ [! / Y	ｻｵｽﾗｲｶﾞｨ	! □[Y	D/t	t[w	a ◫																									
Y9Ð! ⇌ [! / Y	ｻｵｽﾗｲｶﾞｩ	! □[Y	D/t	t[w	a ◫																									
Y9Ð! ⇌ [! / Y	ｻｵｽﾗｲｶﾞｪ	! □[Y	D/t	t[w	a ◫																									
Y9Ð! ⇌ [! / Y	ｻｵｽﾗｲｶﾞｫ	! □[Y	D/t	t[w	a ◫																									
Y9Ð! ⇌ [! / Y	ｻｵｽﾗｲｶﾞｬ	! □[Y	D/t	t[w	a ◫																									
Y9Ð! ⇌ [! / Y	ｻｵｽﾗｲｶﾞｭ	! □[Y	D/t	t[w	a ◫																									
Y9Ð! ⇌ [! / Y	ｻｵｽﾗｲｶﾞｮ	! □[Y	D/t	t[w	a ◫																									
Y9Ð! ⇌ [! / Y	ｻｵｽﾗｲｶﾞｯ	! □[Y	D/t	t[w	a ◫																									
Y9Ð! ⇌ [! / Y	ｻｵｽﾗｲｶﾞｰ	! □[Y	D/t	t[w	a ◫																									
Y9Ð! ⇌ [! / Y	ｻｵｽﾗｲｶﾞｱ	! □[Y	D/t	t[w	a ◫																									
Y9Ð! ⇌ [! / Y	ｻｵｽﾗｲｶﾞｲ	! □[Y	D/t	t[w	a ◫																									
Y9Ð! ⇌ [! / Y	ｻｵｽﾗｲｶﾞｳ	! □[Y	D/t	t[w	a ◫																									
Y9Ð! ⇌ [! / Y	ｻｵｽﾗｲｶﾞｴ	! □[Y	D/t	t[w	a ◫																									
Y9Ð! ⇌ [! / Y	ｻｵｽﾗｲｶﾞｵ	! □[Y	D/t	t[w	a ◫																									
Y9Ð! ⇌ [! / Y	ｻｵｽﾗｲｶﾞｶﾟ	! □[Y	D/t	t[w	a ◫																									
Y9Ð! ⇌ [! / Y	ｻｵｽﾗｲｶﾞｷ	! □[Y	D/t	t[w	a ◫																									
Y9Ð! ⇌ [! / Y	ｻｵｽﾗｲｶﾞｹ	! □[Y	D/t	t[w	a ◫																									
Y9Ð! ⇌ [! / Y	ｻｵｽﾗｲｶﾞｺ	! □[Y	D/t	t[w	a ◫																									
Y9Ð! ⇌ [! / Y	ｻｵｽﾗｲｶﾞｻ	! □[Y	D/t	t[w	a ◫																									
Y9Ð! ⇌ [! / Y	ｻｵｽﾗｲｶﾞｼ	! □[Y	D/t	t[w	a ◫																									
Y9Ð! ⇌ [! / Y	ｻｵｽﾗｲｶﾞｽ	! □[Y	D/t	t[w	a ◫																									
Y9Ð! ⇌ [! / Y	ｻｵｽﾗｲｶﾞｾ	! □[Y	D/t	t[w	a ◫																									
Y9Ð! ⇌ [! / Y	ｻｵｽﾗｲｶﾞｿ	! □[Y	D/t	t[w	a ◫																									
Y9Ð! ⇌ [! / Y	ｻｵｽﾗｲｶﾞﾀ	! □[Y	D/t	t[w	a ◫																									
Y9Ð! ⇌ [! / Y	ｻｵｽﾗｲｶﾞﾁ	! □[Y	D/t	t[w	a ◫																									
Y9Ð! ⇌ [! / Y	ｻｵｽﾗｲｶﾞﾂ	! □[Y	D/t	t[w	a ◫																									
Y9Ð! ⇌ [! / Y	ｻｵｽﾗｲｶﾞﾃ	! □[Y	D/t	t[w	a ◫																									
Y9Ð! ⇌ [! / Y	ｻｵｽﾗｲｶﾞﾄ	! □[Y	D/t	t[w	a ◫																									
Y9Ð! ⇌ [! / Y	ｻｵｽﾗｲｶﾞﾅ	! □[Y	D/t	t[w	a ◫																									
Y9Ð! ⇌ [! / Y	ｻｵｽﾗｲｶﾞﾆ	! □[Y	D/t	t[w	a ◫																									
Y9Ð! ⇌ [! / Y	ｻｵｽﾗｲｶﾞﾇ	! □[Y	D/t	t[w	a ◫																									
Y9Ð! ⇌ [! / Y	ｻｵｽﾗｲｶﾞﾈ	! □[Y	D/t	t[w	a ◫																									
Y9Ð! ⇌ [! / Y	ｻｵｽﾗｲｶﾞﾉ	! □[Y	D/t	t[w	a ◫																									
Y9Ð! ⇌ [! / Y	ｻｵｽﾗｲｶﾞﾊ	! □[Y	D/t	t[w	a ◫																									
Y9Ð! ⇌ [! / Y	ｻｵｽﾗｲｶﾞﾋ	! □[Y	D/t	t[w	a ◫																									
Y9Ð! ⇌ [! / Y	ｻｵｽﾗｲｶﾞﾌ	! □[Y	D/t	t[w	a ◫																									
Y9Ð! ⇌ [! / Y	ｻｵｽﾗｲｶﾞﾍ	! □[Y	D/t	t[w	a ◫																									
Y9Ð! ⇌ [! / Y	ｻｵｽﾗｲｶﾞﾎ	! □[Y	D/t	t[w	a ◫																									
Y9Ð! ⇌ [! / Y	ｻｵｽﾗｲｶﾞﾏ	! □[Y	D/t	t[w	a ◫																									
Y9Ð! ⇌ [! / Y	ｻｵｽﾗｲｶﾞﾐ	! □[Y	D/t	t[w	a ◫																									
Y9Ð! ⇌ [! / Y	ｻｵｽﾗｲｶﾞﾑ	! □[Y	D/t	t[w	a ◫																									
Y9Ð! ⇌ [! / Y	ｻｵｽﾗｲｶﾞﾒ	! □[Y	D/t	t[w	a ◫																									
Y9Ð! ⇌ [! / Y	ｻｵｽﾗｲｶﾞﾓ	! □[Y	D/t	t[w	a ◫																									
Y9Ð! ⇌ [! / Y	ｻｵｽﾗｲｶﾞﾔ	! □[Y	D/t	t[w	a ◫																									
Y9Ð! ⇌ [! / Y	ｻｵｽﾗｲｶﾞﾕ	! □[Y	D/t	t[w	a ◫																									
Y9Ð! ⇌ [! / Y	ｻｵｽﾗｲｶﾞﾖ	! □[Y	D/t	t[w	a ◫																									
Y9Ð! ⇌ [! / Y	ｻｵｽﾗｲｶﾞﾗ	! □[Y	D/t	t[w	a ◫																									
Y9Ð! ⇌ [! / Y	ｻｵｽﾗｲｶﾞﾘ	! □[Y	D/t	t[w	a ◫																									
Y9Ð! ⇌ [! / Y	ｻｵｽﾗｲｶﾞﾙ	! □[Y	D/t	t[w	a ◫																									
Y9Ð! ⇌ [! / Y	ｻｵｽﾗｲｶﾞﾚ	! □[Y	D/t	t[w	a ◫																									
Y9Ð! ⇌ [! / Y	ｻｵｽﾗｲｶﾞﾛ	! □[Y	D/t	t[w	a ◫																									
Y9Ð! ⇌ [! / Y	ｻｵｽﾗｲｶﾞﾜ	! □[Y	D/t	t[w	a ◫																									
Y9Ð! ⇌ [! / Y	ｻｵｽﾗｲｶﾞﾝ	! □[Y	D/t	t[w	a ◫																									
Y9Ð! ⇌ [! / Y	ｻｵｽﾗｲｶﾞﾞ	! □[Y	D/t	t[w	a ◫																									
Y9Ð! ⇌ [! / Y	ｻｵｽﾗｲｶﾞﾟ	! □[Y	D/t	t[w	a ◫																									
Y9Ð. ⇌ [⊔DI ¤ Dw Ł	ｻｵｽﾗｲｶﾞﾠ	. □[D	D/t	t[w	a ◫																									

molex

molex

a Æ∑ƞ∂ƞ∂Æ∑ƞ [! 59{9! [95 ! {{Ða ! ¤{9! [
. ha ! b5 t lb h- ¤{I 99¤

! {{9a . [Ð59{/wLt ¤lhb	! {{9a . [Ðt! w¤ b- a . 9w	/ha thb9b¤				. [h/Y95 ¤9wa lb! [{															{¤! ¤- {	/ha a 9b¤{	ht¤lhb! [! ¤¤! ¤/ I a 9b¤{ {h[5 {9t 9wL ¤9{Ð			
		¤[9t w8{9b/9 hC! b ! . . w8! l ¤lhb lb5L/ ! ¤9{ ¤[9 t w8{9b/9 h C¤[! ¤/ ha thb9b¤☆				/! ' lÞD° lÞI ! b- a . 9wlb5L/ ! ¤9{ . [h/Y95 ¤9wa lb! [t h{lÞlhb /! ' lÞD° lÞI h- ¤! b- a . 9wlb5L/ ! ¤9{ ht 9b ¤9wa lb! [t h{lÞlhb																										
		I h- {lbD Y9ÐJlLh[hw	Dwha a 9¤ /! t	t[w	a ! ¤{9! [	ろ	わ	わ	ゐ	ゑ	を	ん	ゔ	゛	ゟ	ヿ	ヸ	ヺ	・	ーヽ	ヾ	ヿ	ゕ	ゖ	゗	゘	゙	゚	゛	゜	ゝ	ゞ	ゟ
Y9Ð! ¤[! / Y	ｻｵｽﾗｨｵｻﾈ	! □[Y	D/ t	t[w	a □		ヶ						;							ヺ													
Y9Ð! ¤[! / Y	ｻｵｽﾗｨｵｻﾈ	! □[Y	D/ t	t[w	a □		ヶ						;							ヺ	ヹ	ヸ	ヺ	ヿ	ゕ	ゖ	ろ	ゖ					
Y9Ð! ¤[! / Y	ｻｵｽﾗｨｵｻﾈ	! □[Y	D/ t	t[w	a □	ｚ	ヶ	ヶ	ゔ	ゑ	を	ん	;							ヺ	ヹ	ヸ	ヺ	ヿ	ゕ	ゖ	ろ	ゖ					
Y9Ð! ¤[! / Y	ｻｵｽﾗｨｵﾇ	! □[Y	D/ t	t[w	a □	ｚ	ヶ	ヶ	ゔ	ゑ	を	ん	;							ヺ	ヹ	ヸ	ヺ	ヿ	ゕ	ゖ	ろ	ゖ					
Y9Ð! ¤[! / Y	ｻｵｽﾗｨｵﾈ	! □[Y	D/ t	t[w	a □	ｚ	ヶ	ヶ	ゔ	ゑ	を	ん	;		ヸ		ヺ	ヺ	ヹ	ヸ	ヺ	ヿ	ゕ	ゖ	ろ	ゖ						
Y9Ð! ¤[! / Y	ｻｵｽﾗｨｵﾈ	! □[Y	D/ t	t[w	a □	ｚ	ヶ	ヶ	ゔ	ゑ	を									ヺ	ヹ	ヸ	ヺ	ヿ	ゕ	ゖ	ろ	ゖ					
Y9Ð! ¤[! / Y	ｻｵｽﾗｨｵｻ	! □[Y	D/ t	t[w	a □		ヶ			ゑ		ん	;		ヸ	ヹ	ヺ	ヺ							ゕ		ろ	ゖ					
Y9Ð! ¤[! / Y	ｻｵｽﾗｨｵｻ	! □[Y	D/ t	t[w	a □		ヶ			ゑ		ん	;		ヸ	ヹ	ヺ	ヺ									ろ	ゖ					
Y9Ð! ¤[! / Y	ｻｵｽﾗｨｵｻ	! □[Y	D/ t	t[w	a □	ｚ	ヶ								ヸ	ヹ	ヺ	ヺ															
Y9Ð! ¤[! / Y	ｻｵｽﾗｨｵｻ	! □[Y	D/ t	t[w	a □		ヶ						;		ヸ	ヹ	ヺ	ヺ															
Y9Ð! ¤[! / Y	ｻｵｽﾗｨｵｻ	! □[Y	D/ t	t[w	a □	ｚ	ヶ	ヶ	ゔ	ゑ	を	ん	;		ヸ	ヹ	ヺ	ヺ															
Y9Ð! ¤[! / Y	ｻｵｽﾗｨｵｻ	! □[Y	D/ t	t[w	a □		ヶ				を	ん																					
Y9Ð! ¤[! / Y	ｻｵｽﾗｨｵｻ	! □[Y	D/ t	t[w	a □		ヶ				を																						
Y9Ð! ¤[! / Y	ｻｵｽﾗｨｵｻ	! □[Y	D/ t	t[w	a □	ｚ	ヶ	ヶ	ゔ	ゑ	を	ん	;		ヸ	ヹ	ヺ	ヺ									ろ	ゖ					
Y9Ð! ¤[! / Y	ｻｵｽﾗｨｵｻ	! □[Y	D/ t	t[w	a □	ｚ	ヶ	ヶ	ゔ	ゑ	を	ん	;		ヸ	ヹ	ヺ	ヺ									ろ	ゖ					
Y9Ð! ¤[! / Y	ｻｵｽﾗｨｵｻ	! □[Y	D/ t	t[w	a □	ｚ	ヶ	ヶ	ゔ	ゑ	を	ん	;		ヸ	ヹ	ヺ	ヺ									

TABLE OF CONTENTS	
SHEET NO.	SHEET DESCRIPTION
1	NOTES AND BOM
2	CONFIGURATIONS
3	SCHLEMMER BACKSHELL DETAIL
4	MOLEX BACKSHELL DETAIL

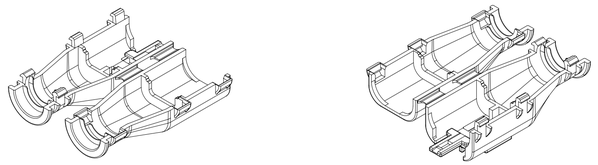

2X3 BLADE

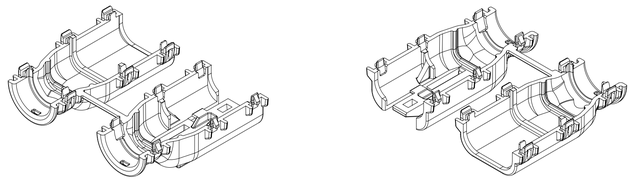

2X4 BLADE

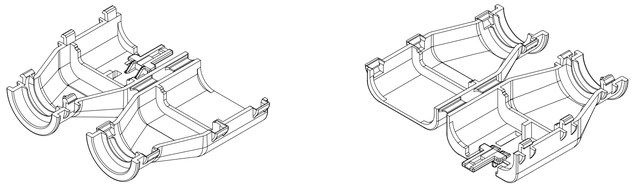

2X6 BLADE

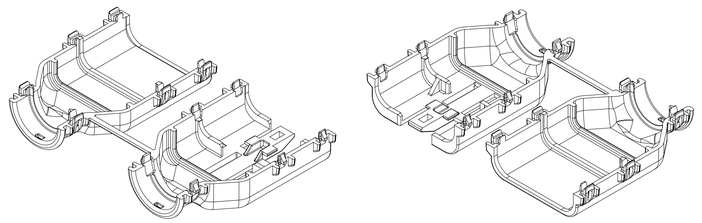

2X8 BLADE

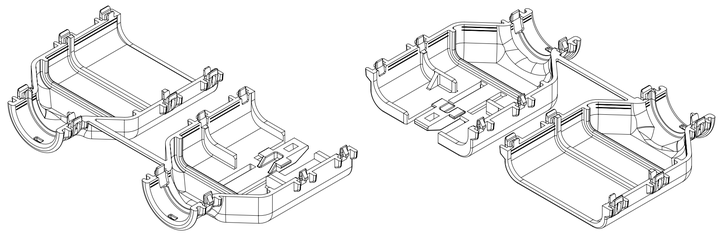

2X10 BLADE

BACKSHELL NOTES: VALID UNLESS OTHERWISE SPECIFIED

1. GENERAL:
a. APPLICATION SPECIFICATION SEE: AS-34951-001
-DESIGNED TO MATE WITH BLADE SEALED ASSEMBLY AS SPECIFIED IN SD-33482-0001.
-COMPONENTS ARE OPTIONAL AND MUST BE PURCHASED SEPERATELY
b. MOLEX PRODUCT SPECIFICATION SEE: TBD
-BACKSHELL DESIGN IS OWNED BY MOLEX.
c. OUTSOURCED MFG PRODUCT SPECIFICATION
-BACKSHELL DESIGN IS OWNED BY SCHLEMMER.
-THESE PRODUCTS ARE ONE TIME USE ONLY.
-REMOVAL FORCE OF THE BACKSHELL FROM THE MOLEX CONNECTOR TO BE 100N MIN.
-REMOVAL FORCE OF SLIT CONVOLUTE FROM THE WITH RIB OPTION BACKSHELLS TO BE 100N MIN.
-REMOVAL FORCE OF UNSLIT CONVOLUTE FROM THE WITH RIB OPTION BACKSHELLS TO BE 100N MIN.
d. PACKAGING SPECIFICATION: SEE BOM
e. PARTS MUST BE IN COMPLIANCE TO MOLEX CHEMICAL SUBSTANCES FOR PRODUCTS AND PACKAGING SPECIFICATION: QEHS-699000-300
f. DATA MUST BE SUBMITTED UNDER THE MOLEX PART NUMBER TO IMDS (COMPANY ID#13255)
g. FOLLOWING PRODUCTION CODES TO BE PRESENT
-DATE CODE
-MOLD CAVITY CODE
-MOLEX LOGO
-RECYCLE CODE
-SUPPLIER PART NUMBER - SCHLEMMER PARTS ONLY

2. DESIGN - MATERIALS:
a. PA66 0% GLASS FILLED
b. BLACK

3. DESIGN GEOMETRY:
a. THIS IS A 100% CAD GENERATED PART. THE CAD MATHEMATICAL DATA IS THE MASTER FOR THIS PART. FOR DIMENSIONAL OR ANY INFORMATION NOT SHOWN ON THIS DRAWING, ANALYZE THE CAD MODEL.
b. GEOMETRIC DIMENSIONS AND TOLERANCES PER ASME Y14.5M - 2009.
c. CORNERS SHOWN AS SHARP TO BE R 0.1.
d. VISUAL DEFECTS SHALL MEET COSMETEIC STANDARD PS-45499-002 (CLASS C).
e. ALLOWABLE FLASH, PARTING LINES MISMATCH, EJECTOR PINS MARK, AND GATE VESTIGE TO BE +0.30 MAX PROTUSION.

BILL OF MATERIALS (BOM)

DESCRIPTION	PART NUMBER	CIRCUIT SIZE	COLOR	RIBS	CONVOLUTE SIZE	PACKAGING DRAWING NUMBER	STATUS	MANUFACTURER
2X3, WITH RIB	34950-0610	2X3	BLACK	YES	9 mm DELPHI	PK-31302-118	SALEABLE	OUTSOURCED MFG
2X3, WITHOUT RIB	34950-0620	2X3	BLACK	NO	9 mm DELPHI	PK-31302-118	SALEABLE	OUTSOURCED MFG
2X4, WITH RIB	34950-0811	2X4	BLACK	YES	NW 12 SCHLEMMER	349509000 PDD	SALEABLE	MOLEX
2X4, WITHOUT RIB	34950-0821	2X4	BLACK	NO	NW 12 SCHLEMMER	349509000 PDD	SALEABLE	MOLEX
2X6, WITH RIB	34950-1210	2X6	BLACK	YES	13 mm DELPHI	PK-31302-118	SALEABLE	OUTSOURCED MFG
2X6, WITHOUT RIB	34950-1220	2X6	BLACK	NO	13 mm DELPHI	PK-31302-118	SALEABLE	OUTSOURCED MFG
2X8, WITH RIB	34950-1611	2X8	BLACK	YES	NW 16 SCHLEMMER	349509000 PDD	SALEABLE	MOLEX
2X8, WITHOUT RIB	34950-1621	2X8	BLACK	NO	NW 16 SCHLEMMER	349509000 PDD	SALEABLE	MOLEX
2X10, WITH RIB	34950-2011	2X10	BLACK	YES	NW 16 SCHLEMMER	349509000 PDD	SALEABLE	MOLEX
2X10, WITHOUT RIB	34950-2021	2X10	BLACK	NO	NW 16 SCHLEMMER	349509000 PDD	SALEABLE	MOLEX

B11	CHANGED DIMS ON SHEET 3 TO MATCH E DWG
B10	UPDATED BACKSHELL MANUFACTURER
B9	CHANGED PARTS STATUS TO SALEABLE
B8	ADDED BALLOON NO. 99
B7	UPDATED BALLOON NUMBERS
B6	UPDATED RIB AND WEDGE FEATURES
B4	UPDATED DIM 26 28 30 32
B3	UPDATED TOLERANCES
B2	ADDED BALLOONS & UPDATED BOM
B1	UPDATED NOTES
B	MIGRATION & ADDED MOLEX PART NUMBERS
A6	UPDATED BILL OF MATERIALS
A5	UPDATED STATUS COLUMN
A4	MINOR NOMENCLATURE CLEAN UP
A3	UPDATED VIEWSET & NOTES
A2	UPDATED REFERENCE DRAWINGS
A1	UPDATED NOTES
A	INITIAL RELEASE
REV	DESCRIPTION

INSPECTION NUMBER LOG
LAST NUMBER: 1 - 5
ADDED: 26 28 30 32 34 35 36 48 98 99
REMOVED: 26 30

QUALITY SYMBOLS	
AV	= 0
EV	= 0
FV	= 0
	= 0
CV	= 0
	= 0
	= 0
GV	= 0

EC NO: 638031
DRWN: PPALLAN 2020/05/20
CHK'D: MVANSLAMBROU 2020/05/22
APPR: MVANSLAMBROU 2020/05/22

REV: B11

THIS DRAWING CONTAINS INFORMATION THAT IS PROPRIETARY TO MOLEX ELECTRONIC TECHNOLOGIES, LLC AND SHOULD NOT BE USED WITHOUT WRITTEN PERMISSION

GENERAL TOLERANCES (UNLESS SPECIFIED)

ANGULAR TOL ±	3.0 °
4 PLACES	±
3 PLACES	±
2 PLACES	± 0.1
1 PLACE	± 0.2
0 PLACES	±

DRAFT WHERE APPLICABLE MUST REMAIN WITHIN DIMENSIONS

DIMENSION UNITS	mm
SCALE	1:1
DRWN BY	DAHALL
DATE	2013/03/19
CHK'D BY	
DATE	
APPR BY	VKOSHY
DATE	2013/04/08
DRAWING SIZE	A1
THIRD ANGLE PROJECTION	

molex®

MX150 DUAL ROW BLADE BACKSHELLS

PRODUCT CUSTOMER DRAWING

SERIES	MATERIAL NUMBER	CUSTOMER
34950		GENERAL MARKET

DOCUMENT NUMBER	DOC TYPE	DOC PART	SHEET NUMBER
SD-34950-0001	PSD	001	1 OF 4

RELEASE STATUS	P1	RELEASE DATE	2020/05/22 12:34:45

COPYRIGHT, MOLEX® ELECTRONIC TECHNOLOGIES, LLC
DATE: 2017/02/08

SHEET DESCRIPTION
CONFIGURATIONS

WITH RIB

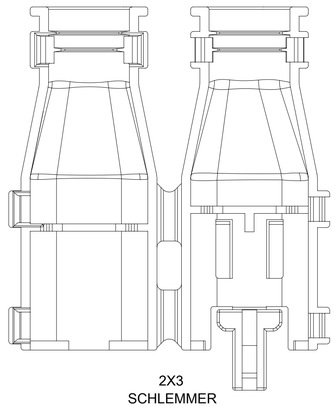

2X3
SCHLEMMER

WITHOUT RIB

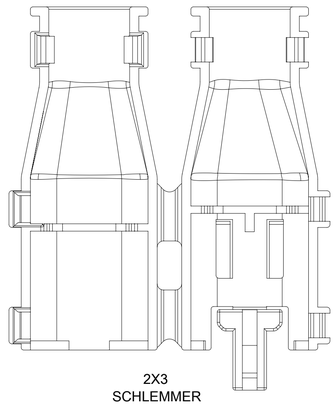

2X3
SCHLEMMER

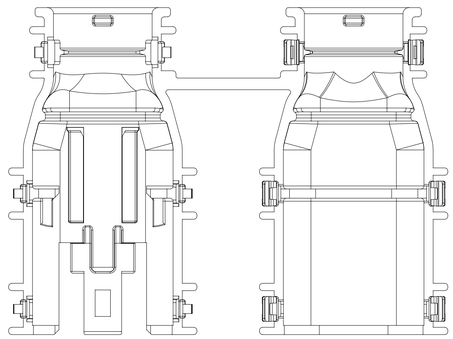

2X4
MOLEX

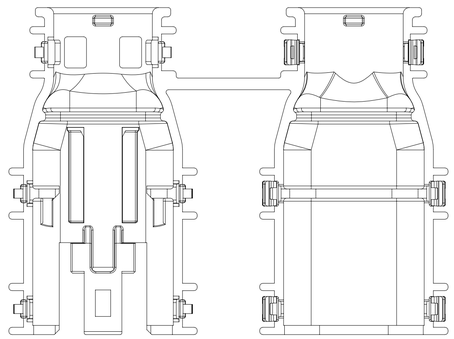

2X4
MOLEX

WITH RIB

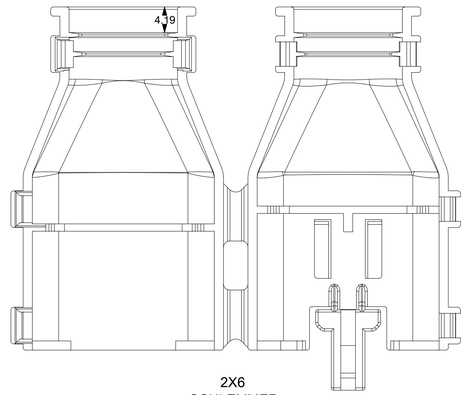

2X6
SCHLEMMER

WITHOUT RIB

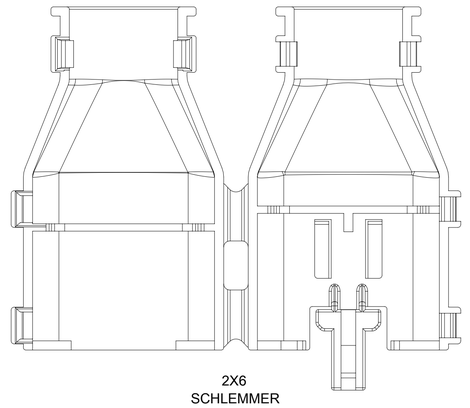

2X6
SCHLEMMER

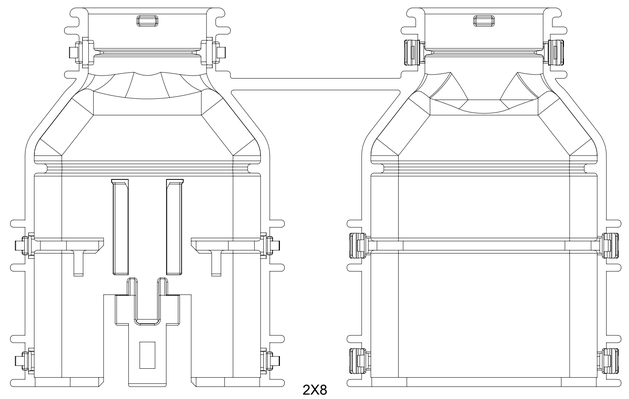

2X8
MOLEX

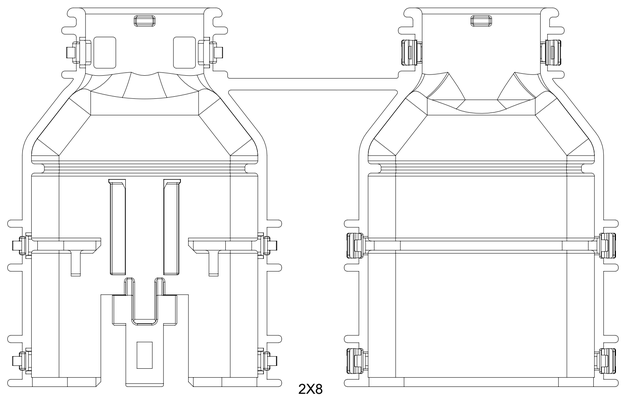

2X8
MOLEX

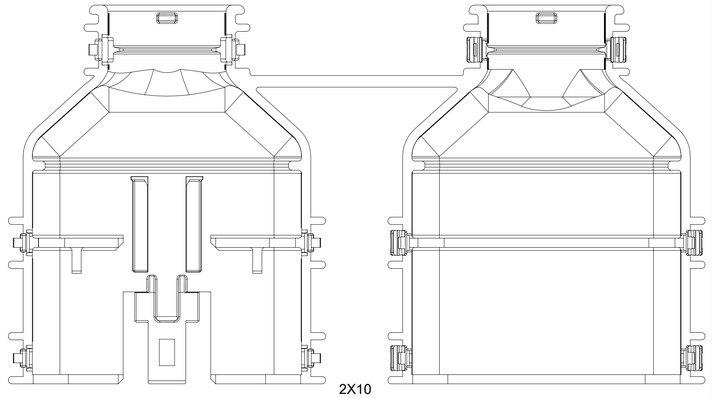

2X10
MOLEX

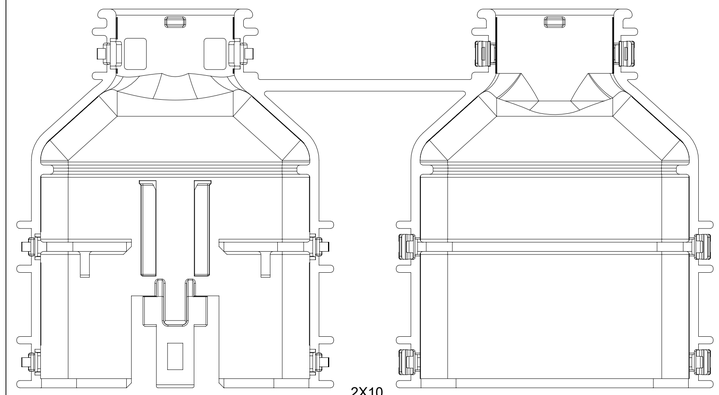

2X10
MOLEX

QUALITY SYMBOLS			
EA	=	0	
EC	=	0	
EP	=	0	
▼	=	0	
C	=	0	
☒	=	0	
■	=	0	
V	=	0	

THIS DRAWING CONTAINS INFORMATION THAT IS PROPRIETARY TO MOLEX ELECTRONIC TECHNOLOGIES, LLC AND SHOULD NOT BE USED WITHOUT WRITTEN PERMISSION

EC NO: 638031 2020/05/20
DRWN: PPALLAN 2020/05/22
CHK'D: MVANSLAMBROU 2020/05/22
APPR: MVANSLAMBROU

REV: B11

GENERAL TOLERANCES (UNLESS SPECIFIED)

ANGULAR TOL ±	3.0	°
4 PLACES	±	
3 PLACES	±	
2 PLACES	±	0.1
1 PLACE	±	0.2
0 PLACES	±	

DRAFT WHERE APPLICABLE MUST REMAIN WITHIN DIMENSIONS

DIMENSION UNITS: mm
SCALE: 2:1
DRWN BY: DAHALL DATE: 2013/03/19
CHK'D BY: DATE:
APPR BY: VKOSHY DATE: 2013/04/08
DRAWING SIZE: A1
THIRD ANGLE PROJECTION

molex®

MX150 DUAL ROW BLADE BACKSHELLS

PRODUCT CUSTOMER DRAWING

SERIES	MATERIAL NUMBER	CUSTOMER
34950		GENERAL MARKET

DOCUMENT NUMBER	DOC TYPE	DOC PART	SHEET NUMBER
SD-34950-0001	PSD	001	2 OF 4

RELEASE STATUS	P1	RELEASE DATE	2020/05/22 12:34:45

FORMAT: master-fp-prod-A1-
DATE: 2017/03/06

SHEET DESCRIPTION
SCHLEMMER BACKSHELL DETAIL

CHARTED DIMENSION						
PART NUMBER	DIMENSIONS					
	A	B	C	D	E	F
2X3, WITH RIB	56.00	13.20	9.80	3.90	0.65	2.70
2X3, WITHOUT RIB	56.00	13.20	N/A	N/A	N/A	N/A
2X4, WITH RIB	TBD	TBD	TBD	TBD	TBD	TBD
2X4, WITHOUT RIB	TBD	TBD	TBD	TBD	TBD	TBD
2X6, WITH RIB	56.00	17.70	13.6	4.2	0.83	3.10
2X6, WITHOUT RIB	56.00	17.70	N/A	N/A	N/A	N/A

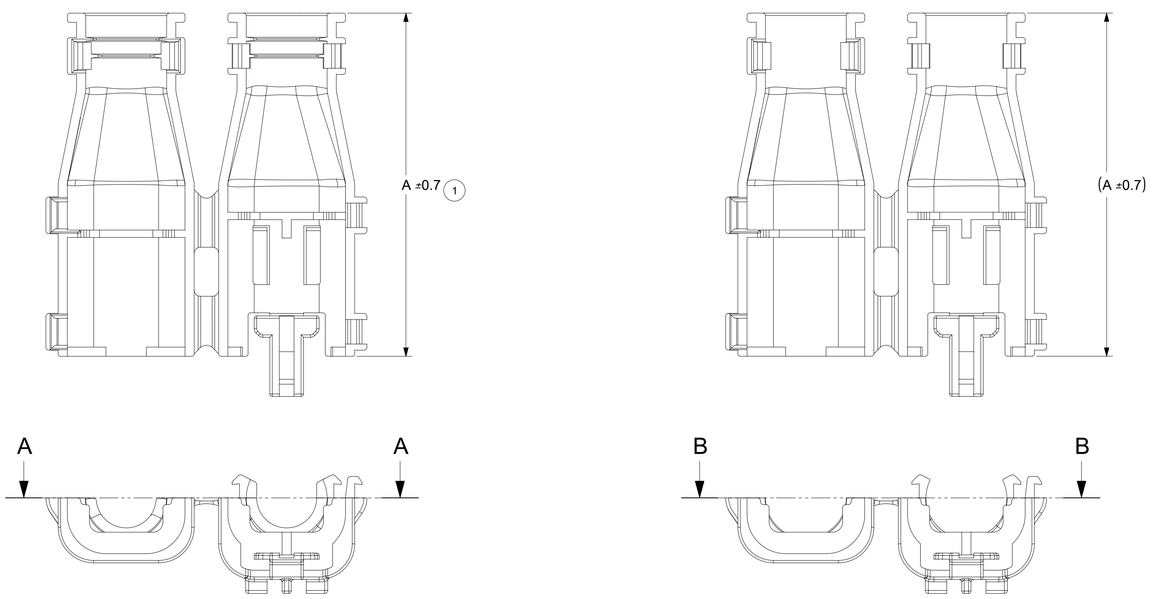

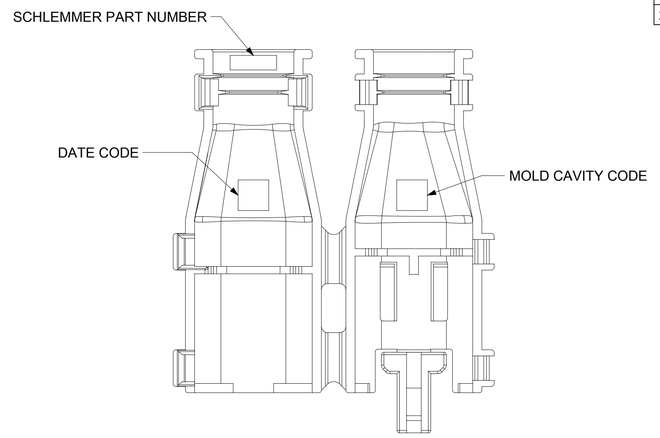

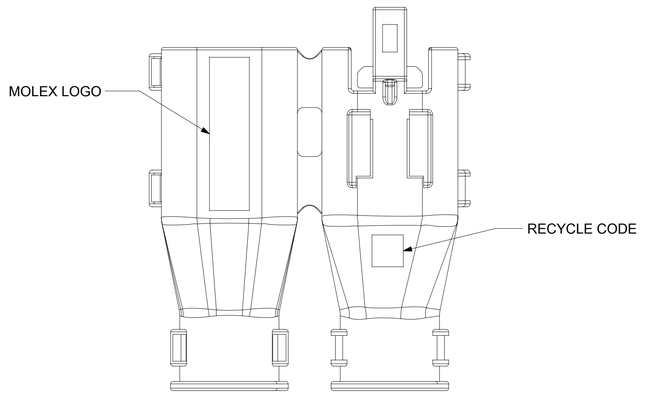

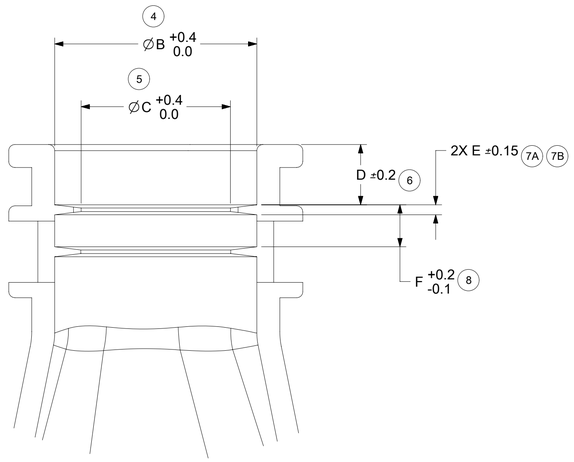

PARTIAL SECTION A-A
SCALE 5:1
WITH RIBS

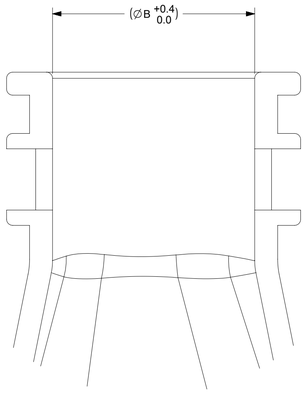

PARTIAL SECTION B-B
SCALE 5:1
WITHOUT RIBS

QUALITY SYMBOLS	
FA	= 0
FC	= 0
FD	= 0
▼	= 0
C	= 0
☒	= 0
■	= 0
C	= 0

THIS DRAWING CONTAINS INFORMATION THAT IS PROPRIETARY TO MOLEX ELECTRONIC TECHNOLOGIES, LLC AND SHOULD NOT BE USED WITHOUT WRITTEN PERMISSION

EC NO: 638031 2020/05/20
DRWN: PPALLAN 2020/05/22
CHK'D: MVANSLAMBROU 2020/05/22
APPR: MVANSLAMBROU

GENERAL TOLERANCES (UNLESS SPECIFIED)	
ANGULAR TOL ±	3.0 °
4 PLACES	±
3 PLACES	±
2 PLACES	± 0.1
1 PLACE	± 0.2
0 PLACES	±

DRAFT WHERE APPLICABLE MUST REMAIN WITHIN DIMENSIONS

REV: B11

DIMENSION UNITS	SCALE
mm	2:1
DRWN BY: DAHALL	DATE: 2013/03/19
CHK'D BY	DATE
APPR BY: VKOSHY	DATE: 2013/04/08
DRAWING SIZE: A1	THIRD ANGLE PROJECTION

molex®

MX150 DUAL ROW BLADE BACKSHELLS

PRODUCT CUSTOMER DRAWING

SERIES	MATERIAL NUMBER	CUSTOMER
34950		GENERAL MARKET

DOCUMENT NUMBER	DOC TYPE	DOC PART	SHEET NUMBER
SD-34950-0001	PSD	001	3 OF 4

RELEASE STATUS	P1	RELEASE DATE	2020/05/22 12:34:45

SHEET DESCRIPTION
MOLEX BACKSHELL DETAIL

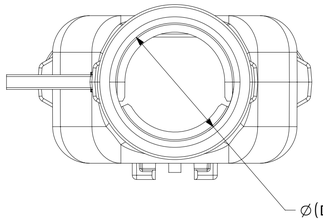

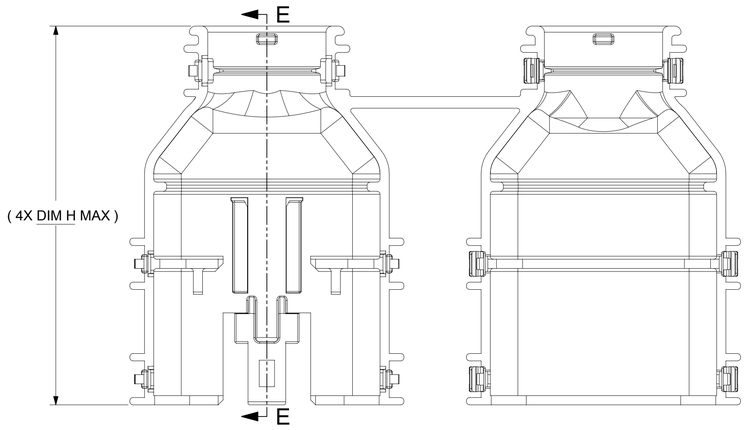

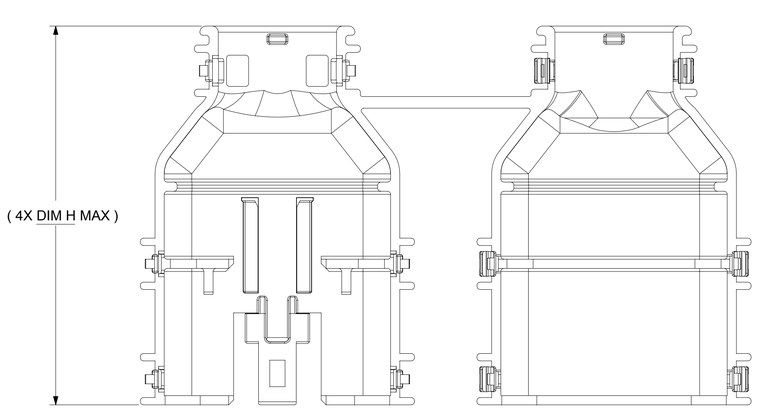

98 99
DIM. R ≈0.15
ALL AROUND

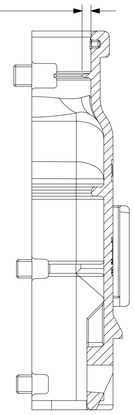

SECTION E-E

DESCRIPTION	CHARTED DIMENSION						
	H	J	K	L	M	S	R
2X4, WITH RIB	53.56	16.10	0.80	N/A	N/A	16.10	**1.35**
2X4, WITHOUT RIB	53.56	16.10	N/A	3.60	5.10	16.10	**N/A**
2X8, WITH RIB	62.01	19.30	0.80	N/A	N/A	19.30	**1.45**
2X8, WITHOUT RIB	62.01	19.30	N/A	3.60	5.10	19.30	**N/A**
2X10, WITH RIB	62.01	19.30	0.80	N/A	N/A	19.30	**1.45**
2X10, WITHOUT RIB	62.01	19.30	N/A	3.60	5.10	19.30	**N/A**

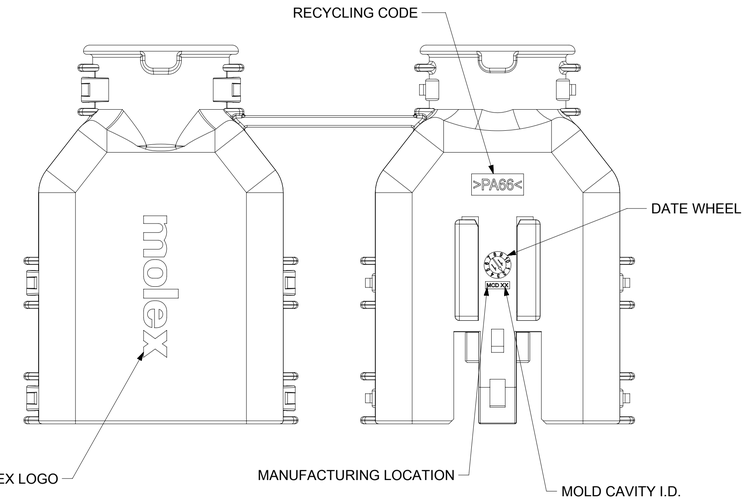

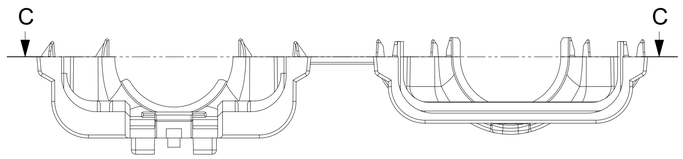

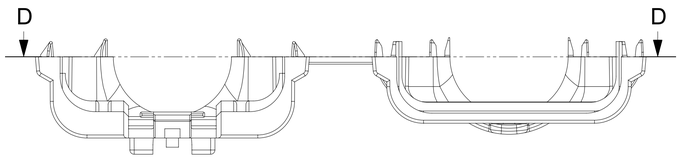

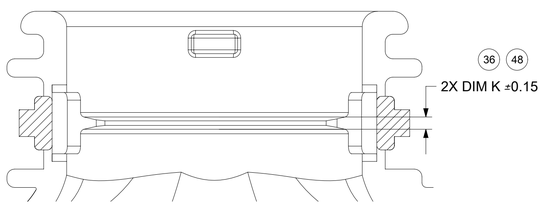

PARTIAL SECTION C-C
SCALE 5:1
WITH RIBS

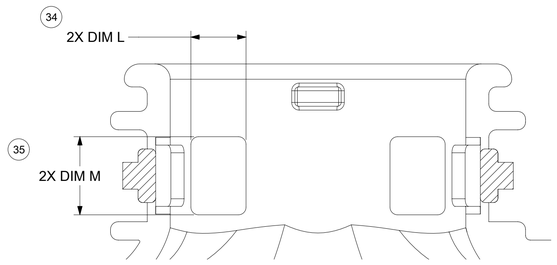

PARTIAL SECTION D-D
SCALE 5:1
WITHOUT RIBS

QUALITY SYMBOLS	
FA	= 0
FE	= 0
FP	= 0
	= 0
C	= 0
	= 0
	= 0
	= 0

THIS DRAWING CONTAINS INFORMATION THAT IS PROPRIETARY TO MOLEX ELECTRONIC TECHNOLOGIES, LLC AND SHOULD NOT BE USED WITHOUT WRITTEN PERMISSION

EC NO: 638031 2020/05/20
DRWN: PPALLAN 2020/05/22
CHK'D: MVANSLAMBROU 2020/05/22
APPR: MVANSLAMBROU

GENERAL TOLERANCES (UNLESS SPECIFIED)	
ANGULAR TOL ± 3.0 °	
4 PLACES	±
3 PLACES	±
2 PLACES	± 0.1
1 PLACE	± 0.2
0 PLACES	±

DRAFT WHERE APPLICABLE MUST REMAIN WITHIN DIMENSIONS

REV B11

DIMENSION UNITS: mm
SCALE: 2:1
DRWN BY: DAHALL DATE: 2013/03/19
CHK'D BY: DATE:
APPR BY: VKOSHY DATE: 2013/04/08
DRAWING SIZE: A1
THIRD ANGLE PROJECTION

molex®

MX150 DUAL ROW BLADE BACKSHELLS

PRODUCT CUSTOMER DRAWING

SERIES	MATERIAL NUMBER	CUSTOMER
34950		GENERAL MARKET

DOCUMENT NUMBER	DOC TYPE	DOC PART	SHEET NUMBER
SD-34950-0001	PSD	001	4 OF 4

RELEASE STATUS	P1	RELEASE DATE	2020/05/22 12:34:45