THIS DRAWING IS UNPUBLISHED. RELEASED FOR PUBLICATION – ,– .
© COPYRIGHT – By – ALL RIGHTS RESERVED.

LOC	DIST
—	—

REVISIONS

P	LTR	DESCRIPTION	DATE	DWN	APVD
	A	REVISED PER ECR–14–017789	27NOV2014	NK	DC

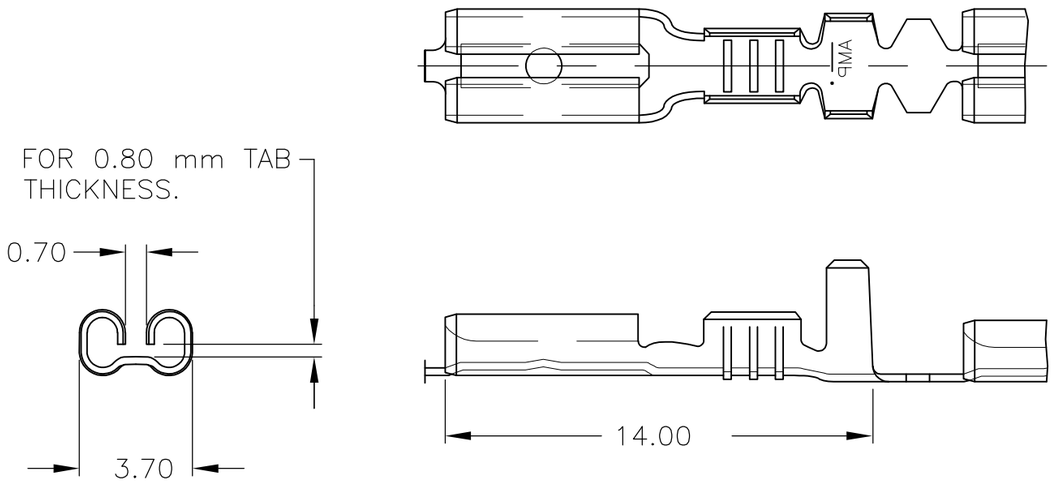

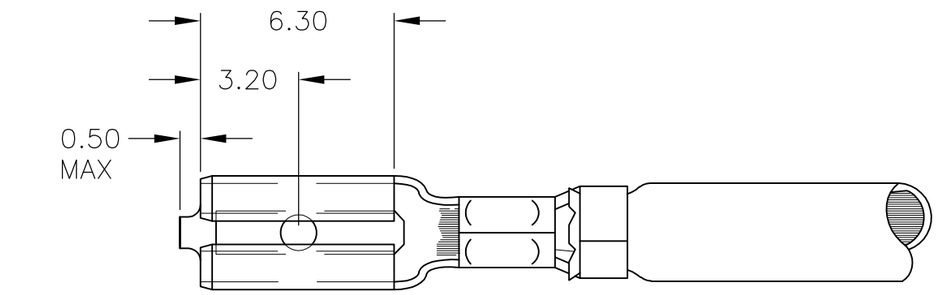

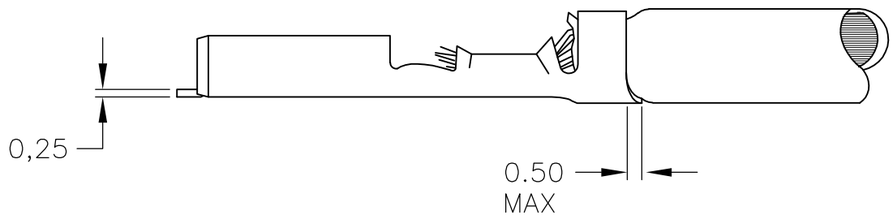

1. FOR USE ON MINIATURE APPLICATORS (LEFT–RIGHT FEED) AND STANDARD APPLICATORS (RIGHT–LEFT FEED).
2. REELED WITH PAPER COVER.
3. OBSOLETE PARTS: OBSOLETE CIS STREAMLINING PER D.RENAUD/D.SINISI.
4. OBSOLETE

NOTES	FINISH	MATERIAL	PART NUMBER
	~~TINPLATED~~	~~PH.BRONZE~~	~~160918–4~~
	~~UNPLATED~~	~~PH.BRONZE~~	~~160918–3~~
1	~~TINPLATED~~	~~BRASS~~	~~160918–2~~
	UNPLATED	BRASS	160918–1

THIS DRAWING IS A CONTROLLED DOCUMENT.

DIMENSIONS: mm

TOLERANCES UNLESS OTHERWISE SPECIFIED:
0 PLC ± –
1 PLC ± –
2 PLC ± –
3 PLC ± –
4 PLC ± –
ANGLES ± –

MATERIAL –
FINISH –

WIRE RANGE 0.50 – 1.00 mm²
INSUL. RANGE 1.40 – 2.30 DIA

DWN R.v.Lokven 17.09.87
CHK A.B. 18.09.87
APVD L.v.Soest 22.09.87
PRODUCT SPEC —
APPLICATION SPEC —
WEIGHT —

TE Connectivity

NAME .110 SRS FASTON RECEPTACLE.

SIZE	CAGE CODE	DRAWING NO	RESTRICTED TO
A3	00779	C–160918	—

CUSTOMER DRAWING

SCALE	SHEET	REV
5:1	1 OF 1	A