THIS DRAWING IS UNPUBLISHED. RELEASED FOR PUBLICATION -,- .
© COPYRIGHT - By - ALL RIGHTS RESERVED.

LOC	DIST
DF	DO

REVISIONS

P	LTR	DESCRIPTION	DATE	DWN	APVD
	P1	REVISED PER ECO-11-005139	21MAR11	RK	HMR

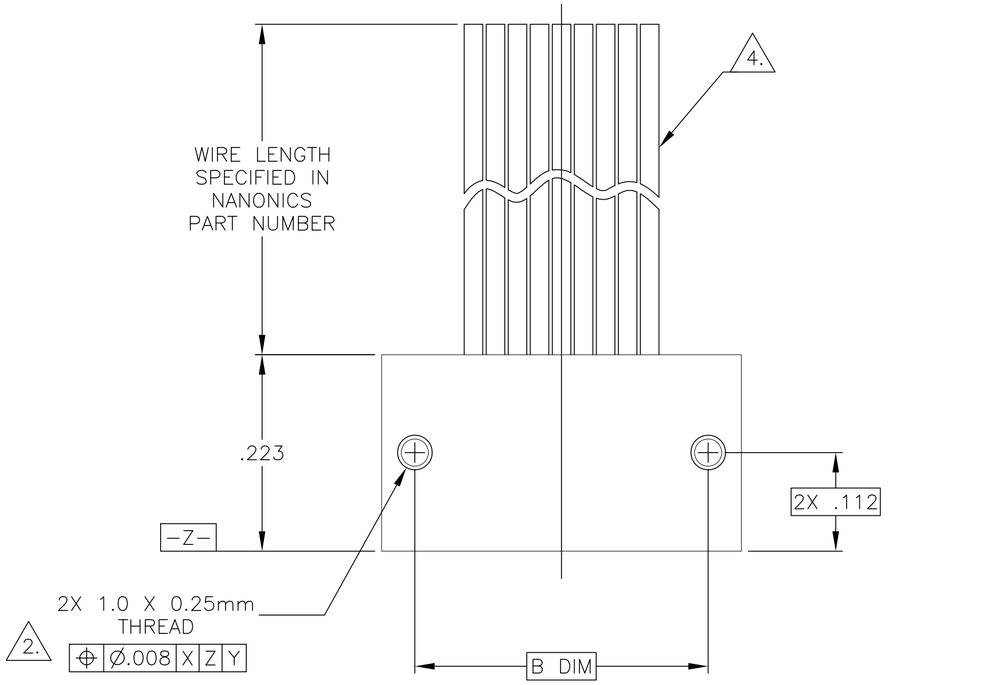

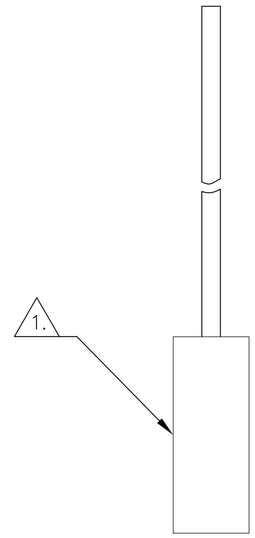

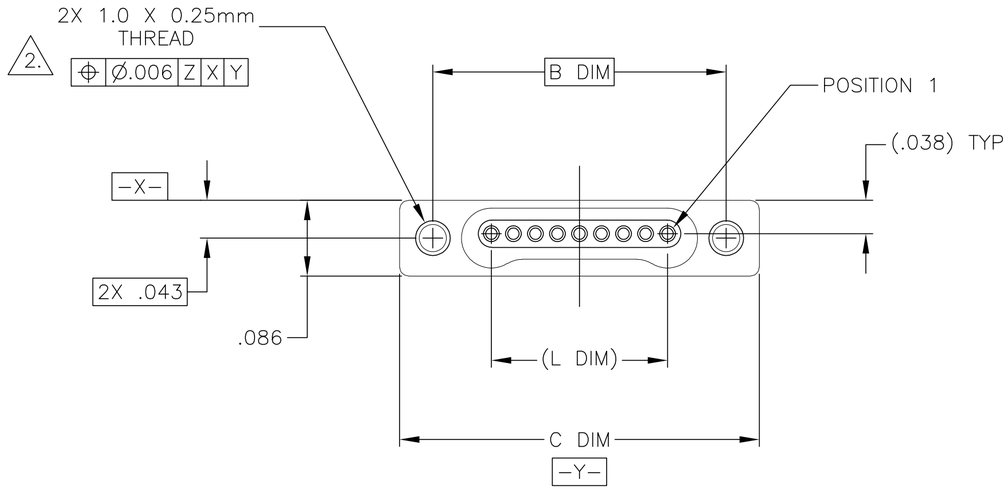

SIZE	B DIM	C DIM ±.0050	(L DIM)
05	.233	.3085	(.100)
09	.333	.4085	(.200)
15	.483	.5585	(.350)
25	.733	.8085	(.600)
37	1.033	1.1085	(.900)
51	1.383	1.4585	(1.250)

1. SHELL OPTIONS (TO BE SPECIFIED IN NANONICS PART NUMBER):
METAL: 6061-T6 ALUMINUM, ELECTROLESS NICKEL PLATED PER MIL-C-26074 (STANDARD) OR GOLD PLATED PER MIL-G-45204
303 STAINLESS STEEL, PASSIVATED PER SAE-AMS-QQ-P-35
INSULATOR MATERIAL FOR ALL METAL SHELLS IS LIQUID CRYSTAL POLYMER (LCP) PER MIL-M-24519 OR PER ASTM D5138
PLASTIC: LIQUID CRYSTAL POLYMER (LCP) PER MIL-M-24519 OR PER ASTM D5138

2. STANDARD 1.0 X 0.25mm JACKSCREW AND MOUNTING THREADS ARE SHOWN FOR REFERENCE ONLY AND MUST BE SPECIFIED IN THE NANONICS PART NUMBER WHEN REQUIRED. 1.2 X 0.25mm THREADS ALSO AVAILABLE.

3. MOUNTING HARDWARE IS AVAILABLE WITH THIS CONFIGURATION (NOT SHOWN). HARDWARE MUST BE SPECIFIED IN THE NANONICS PART NUMBER. CONSULT TE CONNECTIVITY FOR DETAILS.

4. THIS CONFIGURATION MAY BE TERMINATED WITH 28 AWG SOLID, 30 AWG STRANDED OR SMALLER WIRE, OR RIBBON CABLE. CONDUCTOR TYPE AND LENGTH MUST BE SPECIFIED IN NANONICS PART NUMBER.

5. THIS DRAWING PREVIOUSLY IDENTIFIED AS NANONICS N10138/102

THIS DRAWING IS A CONTROLLED DOCUMENT.

DIMENSIONS: INCHES

TOLERANCES UNLESS OTHERWISE SPECIFIED:
0 PLC ± -
1 PLC ± -
2 PLC ± .010
3 PLC ± .005
4 PLC ± -
ANGLES ± 1°

MATERIAL: SEE NOTES
FINISH: SEE NOTES

DWN D. RYAN 20 APR 92
CHK E. PAULUS 05-15-98
APVD M. STORRY 04-05-01
PRODUCT SPEC —
APPLICATION SPEC —
WEIGHT —

TE Connectivity

NAME: RECEPTACLE ASSEMBLY, FLYING LEADS, SINGLE ROW DUALOBE, PLASTIC OR METAL

SIZE	CAGE CODE	DRAWING NO	RESTRICTED TO
A2	00779	C-1589457	—

CUSTOMER DRAWING | SCALE 8:1 | SHEET 1 OF 1 | REV P1

1589457

Mouser Electronics

Authorized Distributor

Click to View Pricing, Inventory, Delivery & Lifecycle Information:

TE Connectivity:

1-1589457-9