THIS DRAWING IS UNPUBLISHED. RELEASED FOR PUBLICATION 20
© COPYRIGHT 20 BY TYCO ELECTRONICS CORPORATION. ALL RIGHTS RESERVED.

PART NUMBER	REV	FIRST USED	POWER UNIT	FEED TYPE	DESCRIPTION
1855500-1	A	122500-1	LEADMAKER	AIR FEED	CUTS CARRIER
1855500-2	A	565435-5	BENCH MODEL K	AIR FEED	CUTS CARRIER
1855500-3	A	354500-1	BENCH MODEL G	AIR FEED	CUTS CARRIER
1855500-6	A	122500-1	LEADMAKER	AIR FEED	CONTINUOUS CARRIER
7-1855500-7	A	-	-	-	SPARE PARTS

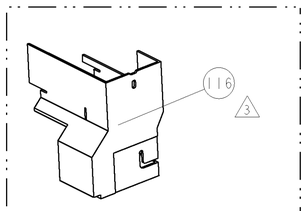

AMP-O-LECTRIC TERM GUARD

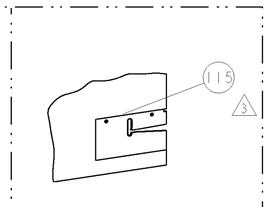

G TERMINATOR GUARD

TERMINAL NAME: TS312 SEALED FEMALE

TE PN	SUMITOMO	SUMITOMO TERMINAL - SUMITOMO CRIMP SPECS			
1949944	8100-0453				
-	-		CRIMP HEIGHT	WIRE SIZE	REF SETTING
-	-		2.60mm+.05/-.05[.102+.002/-.002]	5mm2	C1
-	-			-	-
-	-			-	-
-	-			-	-
-	-	CRIMP	SIZE	TYPE	RANGE
SEAL PN	-				
1949963	7165-0392	WIRE	4.57mm [.180]	F	5mm2
-	-	INSUL	6.35mm [.250]	O	Ø6.250 MAX 5
WIRE STRIP LENGTH	TERM APPL SPEC	FEED	APPLICATOR INSTRUCTIONS		SET UP GAGE
5.64-6.02	NONE	27.61	408-8040		458637-1

LOC	DIST
A	66

REVISIONS

P	LTR	DESCRIPTION	DATE	DWN	APVD
	A	RELEASED	19JUN2009	RK	GB

1. RECOMMENDED SPARE PARTS
2. GREASE LIGHTLY
3. GUARD MUST BE IN PLACE WHEN OPERATING APPLICATOR IN A BENCH MACHINE
4. APPLY TORQ-SEAL IN ALLEN SOCKET TO FILL HOLE AFTER FLAT HD HAS BEEN ADJUSTED TO CORRECT HEIGHT AT QUALIFICATION. APPLY PN 1-23419-5 LOC-TITE TO THREADS.
5. THE INSULATION RANGE LISTED IS FOR THE TERMINAL. THE INSULATION RANGE FOR THE SEAL IS Ø4.4-4.9mm.
6. CUT TO LENGTH AT ASSEMBLY

*** WARNING**
ON INSTALLATION, SET WIRE DISC TO LARGEST WIRE SIZE SETTING. USE OF SETTINGS BELOW MIN. REQUIRED CRIMP HEIGHT SETTING WILL CAUSE DAMAGE TO CRIMP TOOLING.

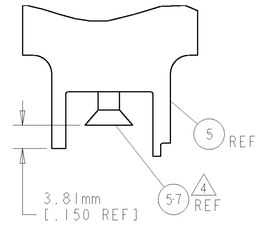

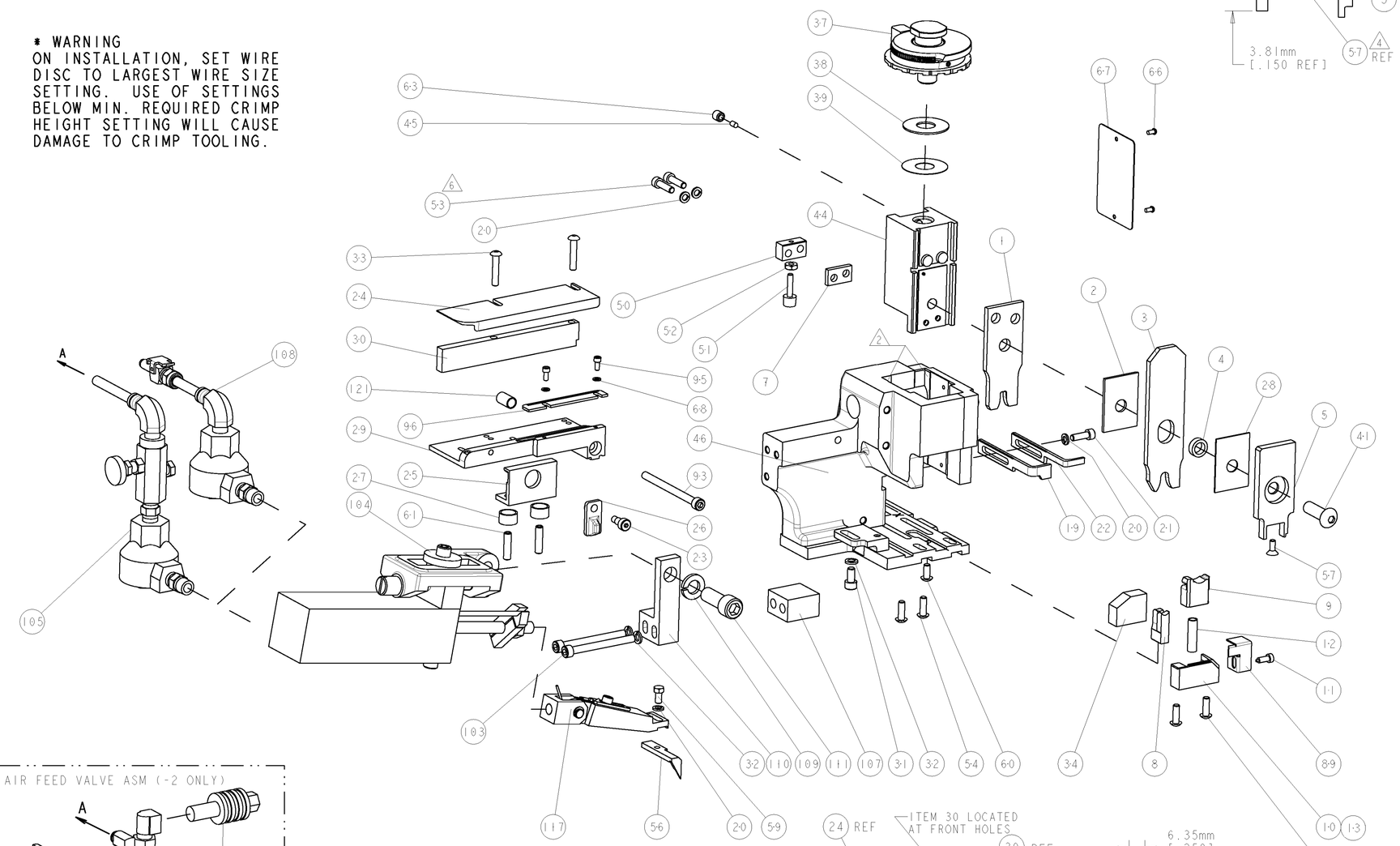

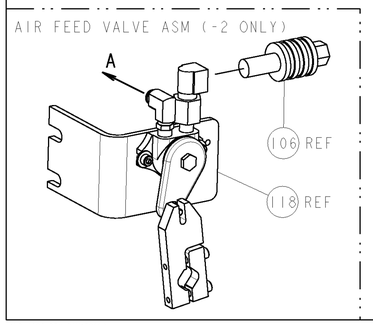

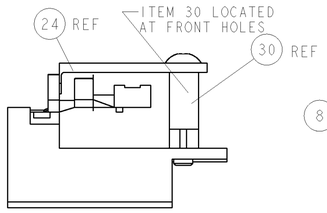

FEED TRACK POSITION GUIDE BY INS. BARREL

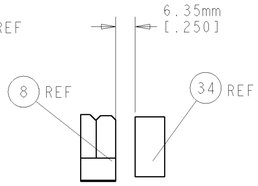

TERMINAL SUPPORT LOCATION

-	1	1	1	1	-	1-22281-8	SPRING, COMPRESSION	121
-	-	-	REF	-	-	692655-6	AIR FEED VALVE ASSEMBLY	118
-	1	1	1	1	-	461062-1	FEED FINGER ASSEMBLY	117
3 -	-	-	REF	-	..	455749-1	GUARD WINDOW	116
3 -	-	REF	-	-	..	679532-1	INSERT, GUARD	115
-	1	1	1	1	-	3-21001-5	SCR, SKT HD CAP 3/8-16 X 1.000	111
-	1	1	1	1	-	459610-3	MOUNT, FEED BRACKET	110
-	1	1	1	1	-	21024-8	WASHER, SPRG LOCK, REG 3/8	109
-	1	1	-	1	-	692655-7	AIR FEED VALVE ASSEMBLY	108
-	1	1	1	1	-	461690-1	SPACER, AIR FEED	107
-	-	-	REF	-	-	24024-2	VALVE, SHUT OFF	106
-	-	-	1	-	-	692655-5	AIR FEED VALVE ASSEMBLY	105
-	1	1	1	1	-	461065-2	ASSEMBLY, AIR FEED	104
-	2	2	2	2	-	4-21000-3	SCR, SKT HD CAP 10-32 X 2.000	103
-	1	1	1	1	-	1-690438-0	FRONT STRIP GUIDE	96
-	2	2	2	2	-	1-21000-3	SCR, SKT HD CAP 4-40 X .250	95
-	1	1	1	1	-	8-21000-7	SCR, SKT HD CAP 10-32 X 2.500	93
-	1	1	1	1	-	318563-1	GUARD, FRONT CHIP	89
-	1	1	1	1	-	4088040	SF APPL INST 408-8040	72
-	1	1	1	1	-	217238-1	GENERAL INSTRUCTION PKG	71
-	2	2	2	2	-	21024-2	WASHER, SPRG LOCK, REG NO 4	68
-	1	1	1	1	-	461264-5	PLATE, IDENTIFICATION	67
-	2	2	2	2	-	21017-2	SCREW, DRIVE	66
-	1	1	1	1	-	21009-2	SCR, SET, SELF LOCKING 1/4-20 X .250	63
-	2	2	2	2	-	5-21006-6	SCR, SET, CUP POINT 10-32 X .750	61
-	1	1	1	1	-	22733-8	SCR, BHSC, SELF-LOCKING, 8-32 X .375	60
-	1	1	1	1	-	2-22603-0	SCR, HEX HD CAP 8-32 X .312	59
-	1	1	1	1	-	1-21003-9	SCR, FLT SKT HD CAP 6-32 X .375	57
-	1	1	1	1	-	2-694433-6	FEED PAWL	56
-	4	4	4	4	-	2-21002-2	SCR, BTN SKT HD CAP 8-32 X .500	54
6 -	2	2	2	2	-	2-21000-8	SCR, SKT HD CAP 8-32 X .625	53
-	1	1	1	1	-	21018-5	NUT, HEX, REG 6-32	52
-	1	1	1	1	-	811242-2	BUMPER, HOLD DOWN	51
-	1	1	1	1	-	690753-1	SPACER, TONKER	50
-	1	1	1	1	-	1633399-4	APPL., BASIC AIR FEED SUB ASSY	46
-	1	1	1	1	-	690191-1	PLUG,NYLON	45
-	1	1	1	1	-	1-819307-9	RAM, SIDE FEED	44
-	1	1	1	1	-	7-21002-9	SCR, BTN SKT HD CAP 5/16-24 X 1.00	41
-	1	1	1	1	-	690125-1	SHIM SUB-ASSY	39
-	1	1	1	1	-	469367-7	SHIM	38
-	1	1	1	1	-	879103-2	FINE ADJUST HEAD ASSEMBLY	37
-	1	1	1	1	-	690786-1	TERMINAL SUPPORT	34
-	2	2	2	2	-	9-21002-6	SCR, BTN SKT HD CAP 8-32 X .875	33
-	3	3	3	3	-	21024-5	WASHER, SPRG LOCK, REG NO 10	32
-	1	1	1	1	-	3-21000-4	SCR, SKT HD CAP 10-32 X .375	31
-	1	1	1	1	-	1-1320908-8	SPACER, STRIP GUIDE	30
-	1	1	1	1	-	1-1633087-0	PLATE, STRIP GUIDE	29
-	1	1	1	1	-	455888-6	SPACER, CRIMPER	28
-	2	2	2	2	-	1-22284-0	SPRING, COMPRESSION	27
-	1	1	1	1	-	356835-1	LEVER, DRAG RELEASE	26
-	1	1	1	1	-	240792-1	DRAG, TERMINAL	25
-	1	1	1	1	-	1320928-2	PLATE, STRIP GUIDE	24
-	1	1	1	1	-	21989-8	SCR, SKT HD SHLDR 3/16 DIA X .250	23
-	1	-	-	1	-	690472-2	STRIPPER	22
-	1	1	1	1	-	2-21000-7	SCR, SKT HD CAP 8-32 X .500	21
-	4	4	4	4	-	21024-4	WASHER, SPRG LOCK, REG NO 8	20
-	-	1	1	-	-	691353-1	STRIPPER	19
1 -	1	-	-	-	-	679625-4	SHEAR HOLDER, FRONT (NO CUT)	13
-	1	1	1	1	-	3-22280-3	SPRING, COMPRESSION	12
-	1	1	1	1	-	1-690461-7	STOP, SHEAR	11
1 -	-	1	1	1	-	2-690459-2	SHEAR HOLDER, FRONT	10
1 -	1	1	1	1	-	318059-4	FLOATING SHEAR, FRONT	9
1 -	1	1	1	1	-	1633767-4	ANVIL, COMBINATION	8
-	1	1	1	1	-	240641-5	SPACER	7
-	-	-	-	-	..	-	-	6
-	1	1	1	1	-	122399-4	DEPRESSOR, SHEAR	5
-	1	1	1	1	-	238011-1	BLOCK, CRIMPER SPACER	4
1 -	1	1	1	1	-	2-1633589-2	CRIMPER, INSUL O	3
-	1	1	1	1	-	1-455888-6	SPACER, CRIMPER	2
1 -	1	1	1	1	-	456412-5	CRIMPER, WIRE .180 F PREMIUM	1
-77	-6	-3	-2	-1	U/M	PART NO	DESCRIPTION	ITEM NO

THIS DRAWING IS A CONTROLLED DOCUMENT FOR TYCO ELECTRONICS CORPORATION. IT IS SUBJECT TO CHANGE WITHOUT NOTICE. HOLDERS OF THIS DRAWING SHOULD BE CONTACTED FOR THE LATEST REVISION.

DWN R KNEPPER 16APR2009
CHK G BAILEY 19JUN2009
APVD N DEMING 19JUN2009

Tyco Electronics
Tyco Electronics
Harrisburg, PA 17105-3608

DIMENSIONS: INCHES

TOLERANCES UNLESS OTHERWISE SPECIFIED:
0 PLC ±-
1 PLC ±0.1
2 PLC ±0.01
3 PLC ±0.001
4 PLC ±0.0001
ANGLES ±-

MATERIAL - -
FINISH - -

PRODUCT SPEC -
APPLICATION SPEC -
WEIGHT -

NAME
FINE ADJUST SIDE FEED
HDM APPLICATOR
-

SIZE	CAGE CODE	DRAWING NO	RESTRICTED TO
A1	00779	C-1855500	-

CUSTOMER DRAWING SCALE 3:5 SHEET 1 OF 1 REV A

CUSTOMER VIEWABLE ASSEMBLY

Mouser Electronics

Authorized Distributor

Click to View Pricing, Inventory, Delivery & Lifecycle Information:

TE Connectivity:

1855500-3