MATERIALS AND FINISHES:

BODY FRONT, CAP, JAM NUT: BRASS
PLATED: NICKEL (100 MICROINCHES MIN)

BODY REAR: BRASS
PLATED: TIN (150 MICROINCHES MIN)

CONTACT: BRASS
PLATED: GOLD (10 MICROINCHES MIN)

INSULATOR: TEFLON

GASKET: SILICONE RUBBER

LOCK WASHER: PHOSPHOR BRONZE
PLATED: NICKEL (10 MICROINCHES MIN)

ELECTRICAL PERFORMANCE:

1.30 VSWR MAX THROUGH 6 GHz
0.25 dB MAX INSERTION LOSS THRU 6 GHz

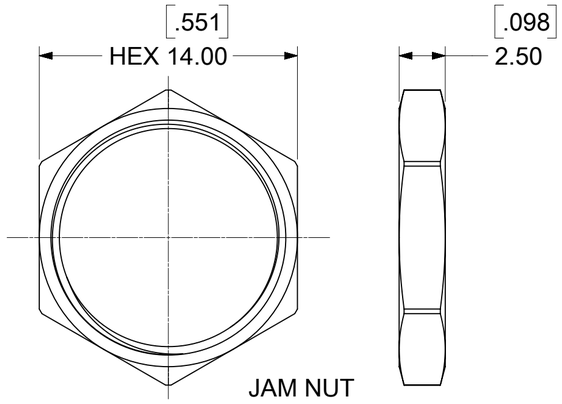

JAM NUT

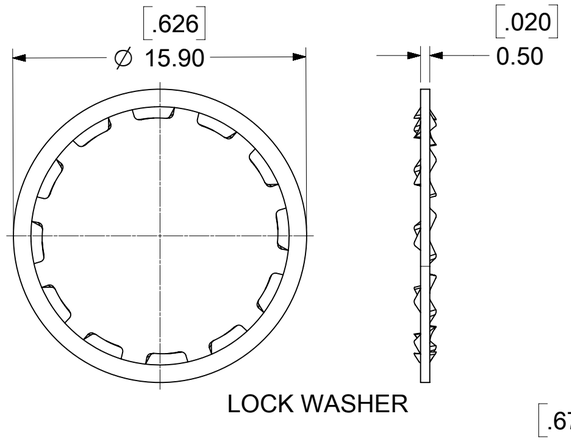

LOCK WASHER

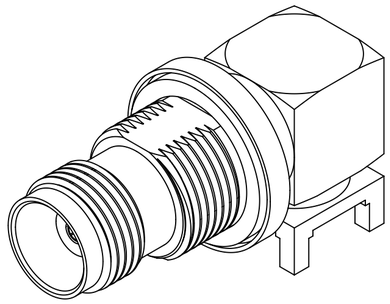

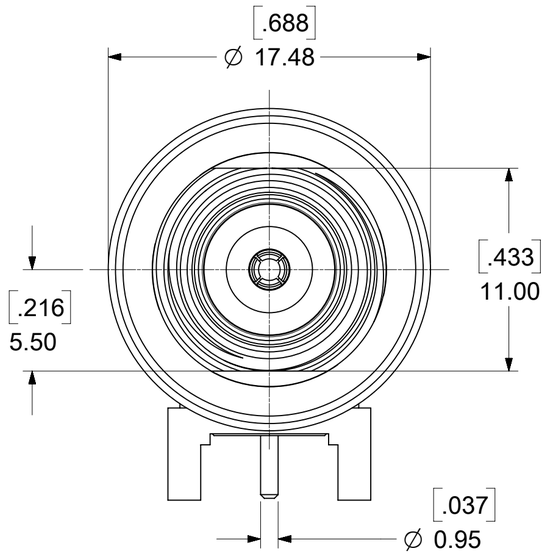

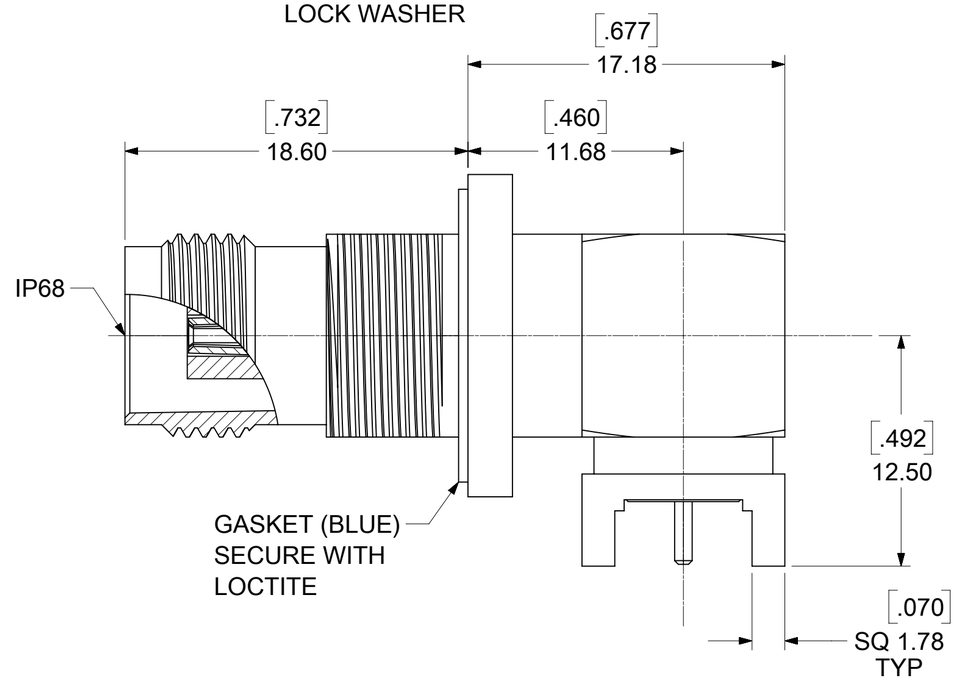

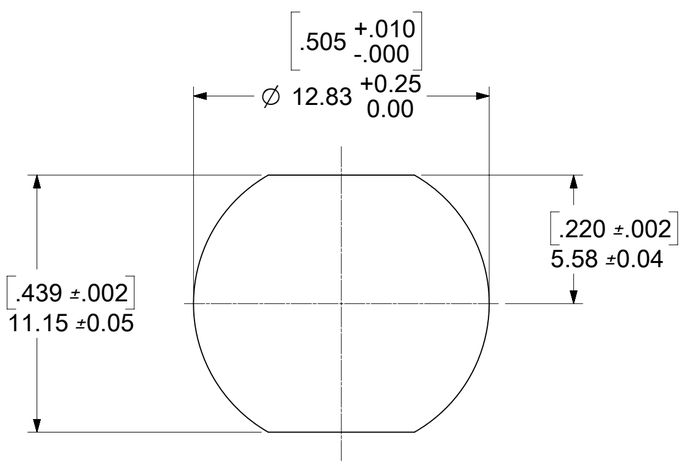

PANEL CUT-OUT
MAX THICKNESS
.180/4.57

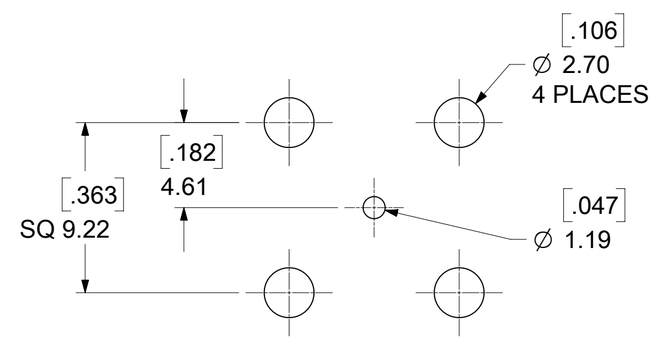

RECOMMENDED PCB LAYOUT

73216-2241	ONE PER BAG	BAG
73216-2240	TRAY	
PART NO.	TNC JACK	HARDWARE
	PACKAGING	

REV	DATE	DESCRIPTION
C4	2017/7/12	UPDATE PACKAGING PER EWR #11132-A
C3	2015/8/20	ADD 9.5mm DIM AND PLATING THICKNESS
C2	2012/3/6	ADD HARDWARE PACKAGING
C1	2012/1/31	ADD -2241
C	2010/4/21	UPDATE VIEW
B1	2010/2/8	ADD LOCTITE REQUIREMENT
B	2010/1/27	ADD GASKET DESCRIPTION
A	2009/7/27	NEW RELEASE PER EWR-4151

THIS DRAWING CONTAINS INFORMATION THAT IS PROPRIETARY TO MOLEX ELECTRONIC TECHNOLOGIES, LLC AND SHOULD NOT BE USED WITHOUT WRITTEN PERMISSION

QUALITY SYMBOLS: = 0 / = 0 / = 0 / = 0 / = 0 / = 0 / = 0 / = 0

EC NO: 119284 2017/07/12
DRWN: RYEH
CHK'D: YCHENG 2017/07/17
APPR:
REV C4

GENERAL TOLERANCES (UNLESS SPECIFIED)
ANGULAR TOL ± 2.0 °
4 PLACES ±
3 PLACES ±
2 PLACES ±
1 PLACE ±
0 PLACES ±
DRAFT WHERE APPLICABLE MUST REMAIN WITHIN DIMENSIONS

DIMENSION UNITS: HYBRID
SCALE: NTS
DRWN BY: AROBERTSON DATE: 2009/07/27
CHK'D BY: SSS DATE: 2009/07/27
APPR BY: JWIENER DATE: 2009/07/27
DRAWING SIZE: C
THIRD ANGLE PROJECTION

molex®

TNC JACK RA
BULKHEAD IP68 PCB TH TNC-J/PCB, EWR-4151

PRODUCT CUSTOMER DRAWING

SERIES	MATERIAL NUMBER	CUSTOMER
73216	SEE TABLE	GENERAL MARKET

DOCUMENT NUMBER	DOC TYPE	DOC PART	SHEET NUMBER
SD-73216-224	PSD	001	1 OF 1

RELEASE STATUS	P1	RELEASE DATE	17.07.2017 07:10:58

FORMAT: master-tb-prod-C
REVISION: G
DATE: 2015/02/06