THIS DRAWING IS UNPUBLISHED. RELEASED FOR PUBLICATION 20
© COPYRIGHT 20 BY TYCO ELECTRONICS CORPORATION. ALL RIGHTS RESERVED.

PART NUMBER	REV	FIRST USED	POWER UNIT	FEED TYPE	DESCRIPTION
1852272-1	A	122500-1	LEADMAKER	POST FEED	CUTS CARRIER
1852272-2	A	565435-5	BENCH MODEL K	PRE FEED	CUTS CARRIER
1852272-3	A	354500-1	BENCH MODEL G	PRE FEED	CUTS CARRIER
1852272-6	A	122500-1	LEADMAKER	POST FEED	CONTINIOUS CARRIER
7-1852272-7	A	-	-	-	SPARE PARTS

1. RECOMMENDED SPARE PARTS
2. GREASE LIGHTLY
3. GUARD MUST BE IN PLACE WHEN OPERATING APPLICATOR IN A BENCH MACHINE

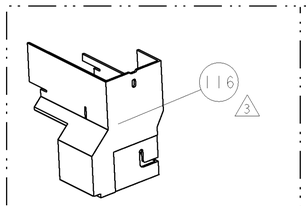

AMP-O-LECTRIC TERM GUARD

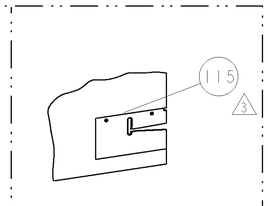

G TERMINATOR GUARD

TERMINAL NAME: 1.5mm BLADE RECEPTACLE					
TE	MANF	AMP TERMINAL - AMP CRIMP SPECS			
1832351	33119-0005				
	33119-0004	PAD LTR	CRIMP HEIGHT		WIRE SIZE
-	-	A	1.30 ±0.05mm[.051±.002]		18 AWG
-	-	B	1.25 ±0.05mm[.049±.002]		20 AWG
-	-	C	-		-
-	-	D	-		-
-	-	CRIMP	SIZE	TYPE	RANGE
-	-				
-	-	WIRE	1.88mm [.074]	F	18-20 AWG
-	-	INSUL	2.39mm [.094]	O	2.03mm MAX
WIRE STRIP LENGTH 4.34-4.72mm	TERM APPL SPEC NONE	FEED 8.64mm	APPL INSTRUCTIONS 408-8040	SET UP GAGE 458637-1	

LOC	DIST
A	66

REVISIONS

P	LTR	DESCRIPTION	DATE	DWN	APVD
	A	PRODUCT RELEASE	JUNE2006	CMR	GB
	A1	ECR-09-006210	17MAR2009	MY	TE

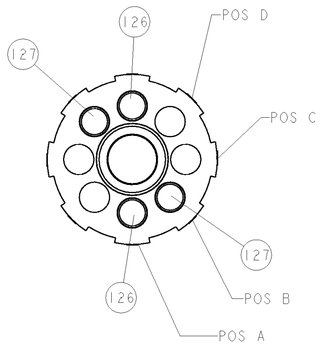

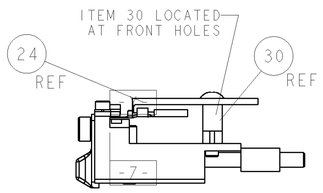

FEED TRACK POSITION

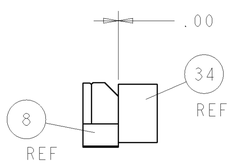

TERMINAL SUPPORT LOCATION

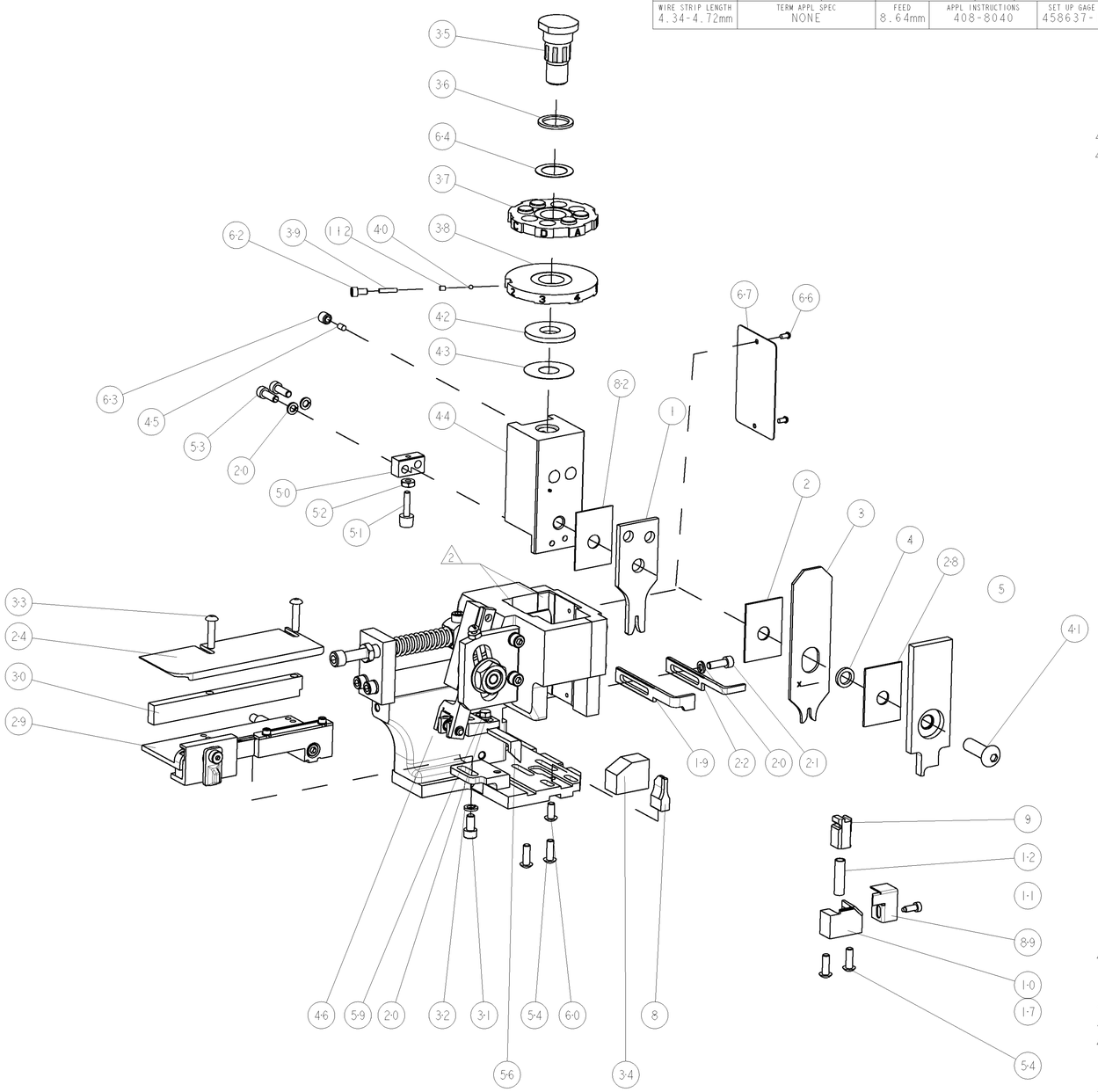

-	2	2	2	2	-	3-354779-1	PIN, WIRE DISC, .3145	127
-	2	2	2	2	-	2-354779-7	PIN, WIRE DISC, .3125	126
-	-	REF	-	..		455749-1	GUARD WINDOW	116
-	-	REF	-	-	..	679532-1	INSERT, GUARD	115
-	1	1	1	1	-	690603-1	SPRING ASSIST AMP-O-MATOR APPLICATOR	112
-	1	1	1	1	-	1-21002-7	SCR, BTN SKT HD CAP 6-32 X .375	91
-	1	1	1	1	-	318563-1	GUARD, FRONT CHIP	89
-	1	1	1	1	-	455888-6	SPACER, CRIMPER	82
-	1	1	1	1	-	4088040	SF APPL INST 408-8040	72
-	1	1	1	1	-	217238-1	GENERAL INSTRUCTION PKG	71
-	1	1	1	1	-	461264-1	PLATE, IDENTIFICATION	67
-	2	2	2	2	-	21017-2	SCREW, DRIVE	66
-	1	1	1	1	-	986950-1	WASHER, FLAT PRECISION	64
-	1	1	1	1	-	21009-2	SCR, SET, SELF LOCKING 1/4-20 X .250	63
-	1	1	1	1	-	23030-1	SCR, SKT HD CAP 6-32 x .25	62
-	1	1	1	1	-	22733-8	SCR, BHSC, SELF-LOCKING, 8-32 X .375	60
-	1	1	1	1	-	2-22603-0	SCR, HEX HD CAP 8-32 X .312	59
-	1	1	1	1	-	458537-2	PAWL, FEED	56
-	4	4	4	4	-	2-21002-2	SCR, BTN SKT HD CAP 8-32 X .500	54
-	2	2	2	2	-	2-21000-7	SCR, SKT HD CAP 8-32 X .500	53
-	1	1	1	1	-	21018-5	NUT, HEX, REG 6-32	52
-	1	1	1	1	-	811242-2	BUMPER, HOLD DOWN	51
-	1	1	1	1	-	690753-1	SPACER, TONKER	50
-	-	1	-	-	..	690602-6	CAM, PRE FEED, 1 5/8	49
-	-	-	1	-	..	690602-5	CAM, PRE FEED, 1 1/8	48
-	1	-	-	1	-	690501-4	CAM, POST-FEED 1 5/8	47
-	1	1	1	1	-	459456-1	APPL. BASIC SUB ASSY (SIDE WISE MQCA)	46
-	1	1	1	1	-	690191-1	PLUG,NYLON	45
-	1	1	1	1	-	455673-1	RAM, SIDE FEED	44
-	1	1	1	1	-	690125-1	SHIM SUB-ASSY	43
-	1	1	1	1	-	690124-1	WASHER, RAM (.115)	42
-	1	1	1	1	-	7-21002-9	SCR, BTN SKT HD CAP 5/16-24 X 1.00	41
-	1	1	1	1	-	23241-6	BALL, STEEL	40
-	1	1	1	1	-	690170-1	SPRING, COMPRESSION	39
-	1	1	1	1	-	690142-1	DISC, INSULATION	38
-	1	1	1	1	-	354777-1	WIRE DISC, ASSEMBLY	37
-	1	1	1	1	-	22480-5	SPRING, COMPRESSION	36
-	1	1	1	1	-	690212-1	POST, RAM	35
-	1	1	1	1	-	690786-6	TERMINAL SUPPORT	34
-	2	2	2	2	-	2-21002-4	SCR, BTN SKT HD CAP 8-32 X .750	33
-	1	1	1	1	-	21024-5	WASHER, SPRG LOCK, REG NO 10	32
-	1	1	1	1	-	3-21000-4	SCR, SKT HD CAP 10-32 X .375	31
-	1	1	1	1	-	1320908-1	SPACER, STRIP GUIDE	30
-	1	1	1	1	-	1633091-2	ASSEMBLY, STRIP GUIDE	29
-	1	1	1	1	-	1-455888-0	SPACER, CRIMPER	28
-	1	1	1	1	-	1320928-3	PLATE, STRIP GUIDE	24
-	1	-	-	1	-	690472-2	STRIPPER	22
-	1	1	1	1	-	2-21000-7	SCR, SKT HD CAP 8-32 X .500	21
-	4	4	4	4	-	21024-4	WASHER, SPRG LOCK, REG NO 8	20
-	-	1	1	-	-	691353-1	STRIPPER	19
-	1	-	-	-	-	679625-1	SHEAR HOLDER, FRONT (NO CUT)	17
-	1	1	1	1	-	3-22280-3	SPRING, COMPRESSION	12
-	1	1	1	1	-	690461-1	STOP, SHEAR	11
-	-	1	1	1	-	690459-1	SHEAR HOLDER, FRONT	10
-	1	1	1	1	-	1-454276-9	FLOATING SHEAR, FRONT	9
1	1	1	1	1	-	7-1633116-0	ANVIL, COMBINATION	8
-	1	1	1	1	-	1-455889-4	DEPRESSOR, SHEAR	5
-	1	1	1	1	-	238011-7	BLOCK, CRIMPER SPACER	4
1	1	1	1	1	-	5-683454-6	CRIMPER, INSULATION O	3
-	1	1	1	1	-	455888-9	SPACER, CRIMPER	2
1	1	1	1	1	-	6-1633305-1	CRIMPER, WIRE PREMIUM	1
-77	-6	-3	-2	-1	U/M	PART NO	DESCRIPTION	ITEM NO

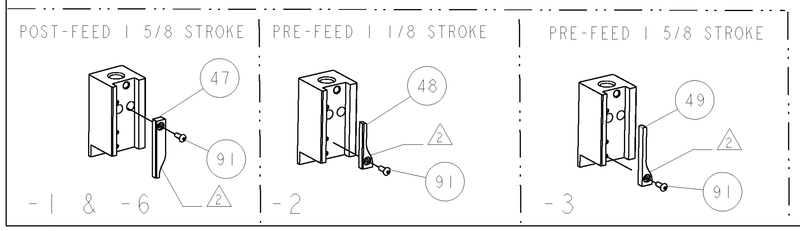

THIS DRAWING IS A CONTROLLED DOCUMENT FOR TYCO ELECTRONICS CORPORATION. IT IS SUBJECT TO CHANGE WITHOUT NOTICE. ANY ORGANIZATION OR ORGANIZATION SHOULD BE CONTACTED FOR THE LATEST REVISION.

DWN C. REICHELDERFER 19MAY2006
CHK T. ELBIN 19MAY2006
APVD T. BENCHOFF 19MAY2006

tyco Electronics — Tyco Electronics, Harrisburg, PA 17105-3608

DIMENSIONS: INCHES

TOLERANCES UNLESS OTHERWISE SPECIFIED:
0 PLC ±-
1 PLC ±0.1
2 PLC ±0.01
3 PLC ±0.001
4 PLC ±0.0001
ANGLES ±-

MATERIAL -
FINISH -

PRODUCT SPEC -
APPLICATION SPEC -
WEIGHT -

NAME: SIDE FEED HDM APPLICATOR

SIZE	CAGE CODE	DRAWING NO	RESTRICTED TO
A1	00779	C-1852272	-

CUSTOMER DRAWING — SCALE 3:5 — SHEET 1 OF 1 — REV A1

CUSTOMER VIEWABLE ASSEMBLY

Mouser Electronics

Authorized Distributor

Click to View Pricing, Inventory, Delivery & Lifecycle Information:

TE Connectivity:
1852272-1