THIS DRAWING IS UNPUBLISHED. RELEASED FOR PUBLICATION 2006
© COPYRIGHT 2006 BY - ALL RIGHTS RESERVED.

LOC	DIST
A1	-

REVISIONS

P	LTR	DESCRIPTION	DATE	DWN	APVD
	J4	REVISED PER ECO-11-005030	24MAR2011	RK	HMR
	J5	ECR-15-003938	26MAR2015	RK	MKO
	J6	ECR-16-016696	15SEP2017	GA	MKO
	J7	ECR-16-016780	15NOV2017	GR	MKO

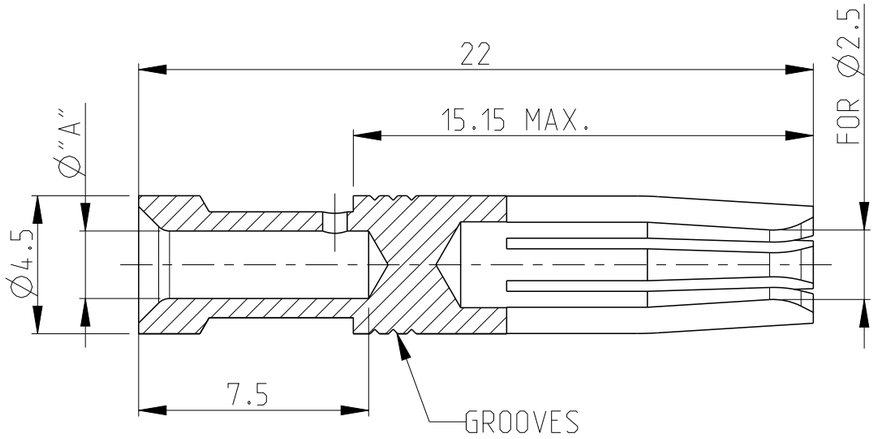

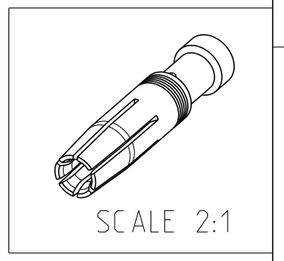

Notes

1. MATERIAL: BRASS
2. FINISH SILVER PLATING: 2 µm Ag MIN. OVER Cu
3. FINISH GOLD PLATING: 0.75 µm Au MIN. OVER Ni
4. FINISH TIN PLATING: 0.6 µm Sn. MIN. OVER Cu
5. VENTILATION HOLE PRESENT ON ALL PARTS
6. WEIGHT: 0.00160 kg, PER PIECE (APPROX.)
7. PACKAGING: 50 PIECES IN POLYBAG
8. PACKAGING: 500 PIECES IN POLYBAG & CARTON
9. PACKAGING: 20000 PIECES IN POLYBAGS & CARTONS
10. SUITABLE PIN CONTACT: PN 1105100
11. SUITABLE INSERTS: SERIES HA, HE, HVE, HVS
12. SUITABLE CRIMP TOOL: PN 1-1105851-8
13. SUITABLE INSERTION TOOL: PN 0-1102855-6
14. SUITABLE EXTRACTION TOOL: PN 0-1102855-7
15. STANDARDS: DIN EN 61984, DIN EN 60664-1
16. OBSOLETE

ORDERING TEXT	PLATING	CROSS SECTION [MM 2]	DIMS "A"	NO.OF GROOVES / MARKINGS	P.U.=50 BAG	P.U.=500 BOX	P.U.=20000 BOX
HE/HA-C-Bu.Sn 4,0mm 2	TIN 4	4.0	2.8	-	-	~~5-0~~ 16	5-3
HE/HA-C-Bu.Sn 2,5mm 2	TIN 4	2.5	2.2	3	-	4-0	4-3
HE/HA-C-Bu.Sn 1,5mm 2	TIN 4	1.5	1.7	2	-	3-0	3-3
HE/HA-C-Bu.Au 4,0mm 2	GOLD 3	4.0	2.8	-	5-2	~~5-9~~ 16	-
HE/HA-C-Bu.Au 2,5mm 2	GOLD 3	2.5	2.2	3	4-2	~~4-9~~ 16	-
HE/HA-C-Bu.Au 1,5mm 2	GOLD 3	1.5	1.7	2	3-2	~~3-9~~ 16	-
HE/HA-C-Bu.Au 0,75-1,0mm 2	GOLD 3	0.75-1.0	1.4	1	2-2	~~2-9~~ 16	-
HE/HA-C-Bu.Au 0,5mm 2	GOLD 3	0.5	1.1	-	1-2	~~1-9~~ 16	-
HE/HA-C-Bu.Au 0,14-0,37mm 2	GOLD 3	0.14-0.37	0.9	3	6-2	~~6-9~~ 16	-
HE/HA-C-Bu.Ag 4,0mm 2	SILVER 2	4.0	2.8	-	5-1	~~5-8~~ 16	-
HE/HA-C-Bu.Ag 2,5mm 2	SILVER 2	2.5	2.2	3	4-1	~~4-8~~ 16	-
HE/HA-C-Bu.Ag 1,5mm 2	SILVER 2	1.5	1.7	2	3-1	~~3-8~~ 16	-
HE/HA-C-Bu.Ag 0,75-1,0mm 2	SILVER 2	0.75-1.0	1.4	1	2-1	~~2-8~~ 16	-
HE/HA-C-Bu.Ag 0,5mm 2	SILVER 2	0.5	1.1	-	1-1	~~1-8~~ 16	-
HE/HA-C-Bu.Ag 0,14-0,37mm 2	SILVER 2	0.14-0.37	0.9	3	~~6-1~~ 16	~~6-8~~ 16	-

PARTS LIST

THIS DRAWING IS A CONTROLLED DOCUMENT.

DIMENSIONS: mm

TOLERANCES UNLESS OTHERWISE SPECIFIED: ISO 8015, DIN ISO 2768 mH-E, DIN 16901-120
0 PLC ±-
1 PLC ±-
2 PLC ±-
3 PLC ±-
4 PLC ±-
ANGLES ±-

MATERIAL: 1
FINISH: 2 3 4

DWN	G.WROBLEWSKI	20SEP2007
CHK	H.BRAUN	20SEP2007
APVD	T. SCHNURPFEIL	20SEP2007
PRODUCT SPEC	108-74004	
APPLICATION SPEC	114-74003	
WEIGHT	-	

TE Connectivity

NAME: SOCKET CONTACT SERIES HA, HE, HVE

SIZE	CAGE CODE	DRAWING NO	RESTRICTED TO
A3	00779	C-1105101	-

Customer Drawing | SCALE 5:1 | SHEET 1 OF 1 | REV J7

Mouser Electronics

Authorized Distributor

Click to View Pricing, Inventory, Delivery & Lifecycle Information:

TE Connectivity:

4-1105101-3