THIS DRAWING IS UNPUBLISHED. RELEASED FOR PUBLICATION - ,- .
© COPYRIGHT - By - ALL RIGHTS RESERVED.

LOC	DIST
AD	00

REVISIONS

P	LTR	DESCRIPTION	DATE	DWN	APVD
	J	REVISED PER ECO-14-000068	26APR2014	NK	MM

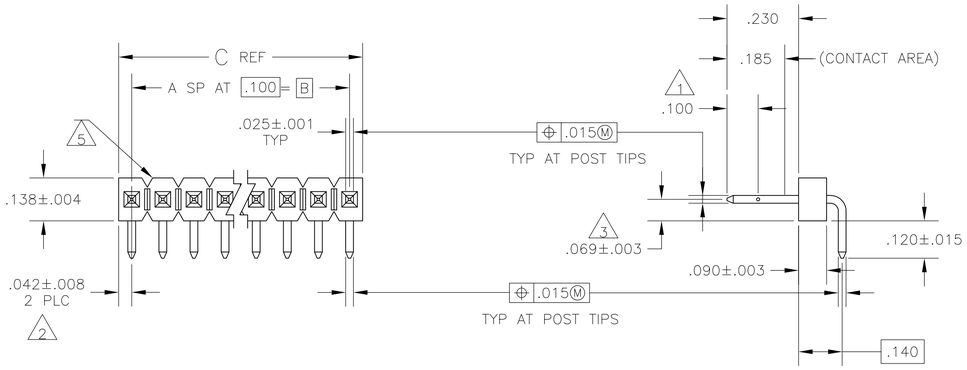

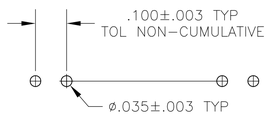

RECOMMENDED HOLE LAYOUT

1. ASSEMBLY MAY BE BROKEN TO THE DESIRED NUMBER OF POSITIONS.
2. THE NOTED DIMENSIONS APPLY AT THE INTERSECTION OF THE POST AND HOUSING
3. POINT OF MEASUREMENT FOR PLATING THICKNESS
4. SINGLE TUBING PACKAGING
5. BREAKAWAY NOTCH ANGLE CAN BE ORIENTED TO THE RIGHT (AS SHOWN) OR TO THE LEFT
6. FINISH: POSTS- .000015 GOLD ON CONTACT AREA, .000100-.000200 MATTE TIN-LEAD ON SOLDER TAIL, ALL OVER .000050 NICKEL
7. FINISH: POSTS- .000015 GOLD ON CONTACT AREA, .000100-.000200 MATTE TIN ON SOLDER TAIL, ALL OVER .000050 NICKEL
8. HIGH TEMPERATURE CONFIGURATION
9. OBSOLETE PARTS: OBSOLETE CIS STREAMLINING PER D.RENAUD/D.SINISI

REMARKS	PLATING	EXCEPT	C	B	A	NO OF POSN	PART NUMBER
OBSOLETE	8	7	4	.384	.300	3	4	9-103325-1
	8	7		3.984	3.900	39	40	9-103325-0
9 OBSOLETE	8	7		3.884	3.800	38	39	8-103325-9
9 OBSOLETE	8	7		3.784	3.700	37	38	8-103325-8
9 OBSOLETE	8	7		3.684	3.600	36	37	8-103325-7
9 OBSOLETE	8	7		3.584	3.500	35	36	8-103325-6
9 OBSOLETE	8	7		3.484	3.400	34	35	8-103325-5
9 OBSOLETE	8	7		3.384	3.300	33	34	8-103325-4
9 OBSOLETE	8	7		3.284	3.200	32	33	8-103325-3
9 OBSOLETE	8	7		3.184	3.100	31	32	8-103325-2
9 OBSOLETE	8	7		3.084	3.000	30	31	8-103325-1
9 OBSOLETE	8	7		2.984	2.900	29	30	8-103325-0
9 OBSOLETE	8	7		2.884	2.800	28	29	7-103325-9
9 OBSOLETE	8	7		2.784	2.700	27	28	7-103325-8
9 OBSOLETE	8	7		2.684	2.600	26	27	7-103325-7
9 OBSOLETE	8	7		2.584	2.500	25	26	7-103325-6
9 OBSOLETE	8	7		2.484	2.400	24	25	7-103325-5
9 OBSOLETE	8	7		2.384	2.300	23	24	7-103325-4
9 OBSOLETE	8	7		2.284	2.200	22	23	7-103325-3
9 OBSOLETE	8	7		2.184	2.100	21	22	7-103325-2
9 OBSOLETE	8	7		2.084	2.000	20	21	7-103325-1
9 OBSOLETE	8	7		1.984	1.900	19	20	7-103325-0
9 OBSOLETE	8	7		1.884	1.800	18	19	6-103325-9
9 OBSOLETE	8	7		1.784	1.700	17	18	6-103325-8
9 OBSOLETE	8	7		1.684	1.600	16	17	6-103325-7
	8	7		1.584	1.500	15	16	6-103325-6
	8	7		1.484	1.400	14	15	6-103325-5
9 OBSOLETE	8	7		1.384	1.300	13	14	6-103325-4
9 OBSOLETE	8	7		1.284	1.200	12	13	6-103325-3
9 OBSOLETE	8	7		1.184	1.100	11	12	6-103325-2
9 OBSOLETE	8	7		1.084	1.000	10	11	6-103325-1
9 OBSOLETE	8	7		.984	.900	9	10	6-103325-0
9 OBSOLETE	8	7		.884	.800	8	9	5-103325-9
9 OBSOLETE	8	7		.784	.700	7	8	5-103325-8
9 OBSOLETE	8	7		.684	.600	6	7	5-103325-7
	8	7		.584	.500	5	6	5-103325-6
	8	7		.484	.400	4	5	5-103325-5
	8	7		.384	.300	3	4	5-103325-4
9 OBSOLETE	8	7		.284	.200	2	3	5-103325-3
	8	7		.184	.100	1	2	5-103325-2
9 OBSOLETE	8	7		.084	—	—	1	5-103325-1

PLATING	EXCEPT	C	B	A	NO OF POSN	PART NUMBER
9 OBSOLETE	6	4	.384	.300	3	4	4-103325-1
	6		3.984	3.900	39	40	4-103325-0
9 OBSOLETE	6		3.884	3.800	38	39	3-103325-9
9 OBSOLETE	6		3.784	3.700	37	38	3-103325-8
9 OBSOLETE	6		3.684	3.600	36	37	3-103325-7
9 OBSOLETE	6		3.584	3.500	35	36	3-103325-6
9 OBSOLETE	6		3.484	3.400	34	35	3-103325-5
9 OBSOLETE	6		3.384	3.300	33	34	3-103325-4
9 OBSOLETE	6		3.284	3.200	32	33	3-103325-3
9 OBSOLETE	6		3.184	3.100	31	32	3-103325-2
9 OBSOLETE	6		3.084	3.000	30	31	3-103325-1
9 OBSOLETE	6		2.984	2.900	29	30	3-103325-0
9 OBSOLETE	6		2.884	2.800	28	29	2-103325-9
9 OBSOLETE	6		2.784	2.700	27	28	2-103325-8
9 OBSOLETE	6		2.684	2.600	26	27	2-103325-7
9 OBSOLETE	6		2.584	2.500	25	26	2-103325-6
9 OBSOLETE	6		2.484	2.400	24	25	2-103325-5
9 OBSOLETE	6		2.384	2.300	23	24	2-103325-4
9 OBSOLETE	6		2.284	2.200	22	23	2-103325-3
9 OBSOLETE	6		2.184	2.100	21	22	2-103325-2
9 OBSOLETE	6		2.084	2.000	20	21	2-103325-1
	6		1.984	1.900	19	20	2-103325-0
9 OBSOLETE	6		1.884	1.800	18	19	1-103325-9
9 OBSOLETE	6		1.784	1.700	17	18	1-103325-8
	6		1.684	1.600	16	17	1-103325-7
9 SUPERSEDED	6		1.584	1.500	15	16	1-103325-6
9 SUPERSEDED	6		1.484	1.400	14	15	1-103325-5
9 OBSOLETE	6		1.384	1.300	13	14	1-103325-4
9 OBSOLETE	6		1.284	1.200	12	13	1-103325-3
9 OBSOLETE	6		1.184	1.100	11	12	1-103325-2
9 OBSOLETE	6		1.084	1.000	10	11	1-103325-1
9 OBSOLETE	6		.984	.900	9	10	1-103325-0
9 OBSOLETE	6		.884	.800	8	9	103325-9
9 OBSOLETE	6		.784	.700	7	8	103325-8
	6		.684	.600	6	7	103325-7
	6		.584	.500	5	6	103325-6
9 SUPERSEDED	6		.484	.400	4	5	103325-5
	6		.384	.300	3	4	103325-4
9 OBSOLETE	6		.284	.200	2	3	103325-3
	6		.184	.100	1	2	103325-2
9 OBSOLETE	6		.084	—	—	1	103325-1

THIS DRAWING IS A CONTROLLED DOCUMENT.

DIMENSIONS: INCHES

TOLERANCES UNLESS OTHERWISE SPECIFIED:
0 PLC ± –
1 PLC ± –
2 PLC ± –
3 PLC ± .005
4 PLC ± –
ANGLES ± –

MATERIAL: HOUSING: FLAME RETARDANT THERMOPLASTIC, COLOR-BLACK; POSTS: COPPER ALLOY

FINISH: SEE TABLE

DWN H MOLL 22OCT87
CHK THOMAS C CLARK 23OCT87
APVD THOMAS C CLARK 23OCT87

PRODUCT SPEC —
APPLICATION SPEC —
WEIGHT —

TE Connectivity

NAME: HEADER ASSY, MOD II, BREAKAWAY, SINGLE ROW, .100 , RIGHT ANGLE, WITH .025 SQ POSTS

SIZE	CAGE CODE	DRAWING NO	RESTRICTED TO
A1	00779	C-103325	—

CUSTOMER DRAWING | SCALE 4:1 | SHEET 1 OF 1 | REV J

4805 (3/11)

Mouser Electronics

Authorized Distributor

Click to View Pricing, Inventory, Delivery & Lifecycle Information:

TE Connectivity:

2-103325-0