THIS DRAWING IS UNPUBLISHED. RELEASED FOR PUBLICATION 20
© COPYRIGHT 20 BY TYCO ELECTRONICS CORPORATION. ALL RIGHTS RESERVED.

FEED FINGER	SET UP GAGE	LOC	DIST
1901697-1	1901068-1	A	66

REVISIONS

P	LTR	DESCRIPTION	DATE	DWN	APVD
	A	RELEASED	5MAR2008	GH	TE

PART NUMBER	REV	DESCRIPTION	PROGRAMMED MEMORY CHIP
1911222-1	A	S3A APPLICATOR	8-1911222-1
7-1911222-1	A	-1 AND SPARE PARTS	9-1911222-1
7-1911222-7	A	SPARE PARTS KIT	

APPLICATOR DATA		
CRIMP	SIZE	TYPE
WIRE	2.03 [.080IN]	F
INSUL	2.79 [.110IN]	OV
APPL INSTRUCTIONS 408-10136		

TERMINAL DATA: TE TERMINAL		TYCO ELECTRONICS CRIMP SPEC	
TERMINAL NAME: .250 SERIES FASTIN-FASTON CONNECTOR			
WIRE STRIP LENGTH 4.80-5.60mm [.188-.220 IN]		INSULATION DIAMETER RANGE 1.40-2.30mm [.055-.090 IN]	
TERMINAL	114-18022	-	-
APPL SPEC	-	-	-
TERMINALS APPLIED			
160860-4	160860-2	9-160860-3	6-160860-8
160860-1	160860-3	6-160860-7	-

WIRE SIZE	CRIMP HEIGHT mm[INCH]
1mm²	1.61±.05 [.063±.002]
0.75mm²	1.52±.05 [.060±.002]
0.5mm²	1.43±.05 [.056±.002]

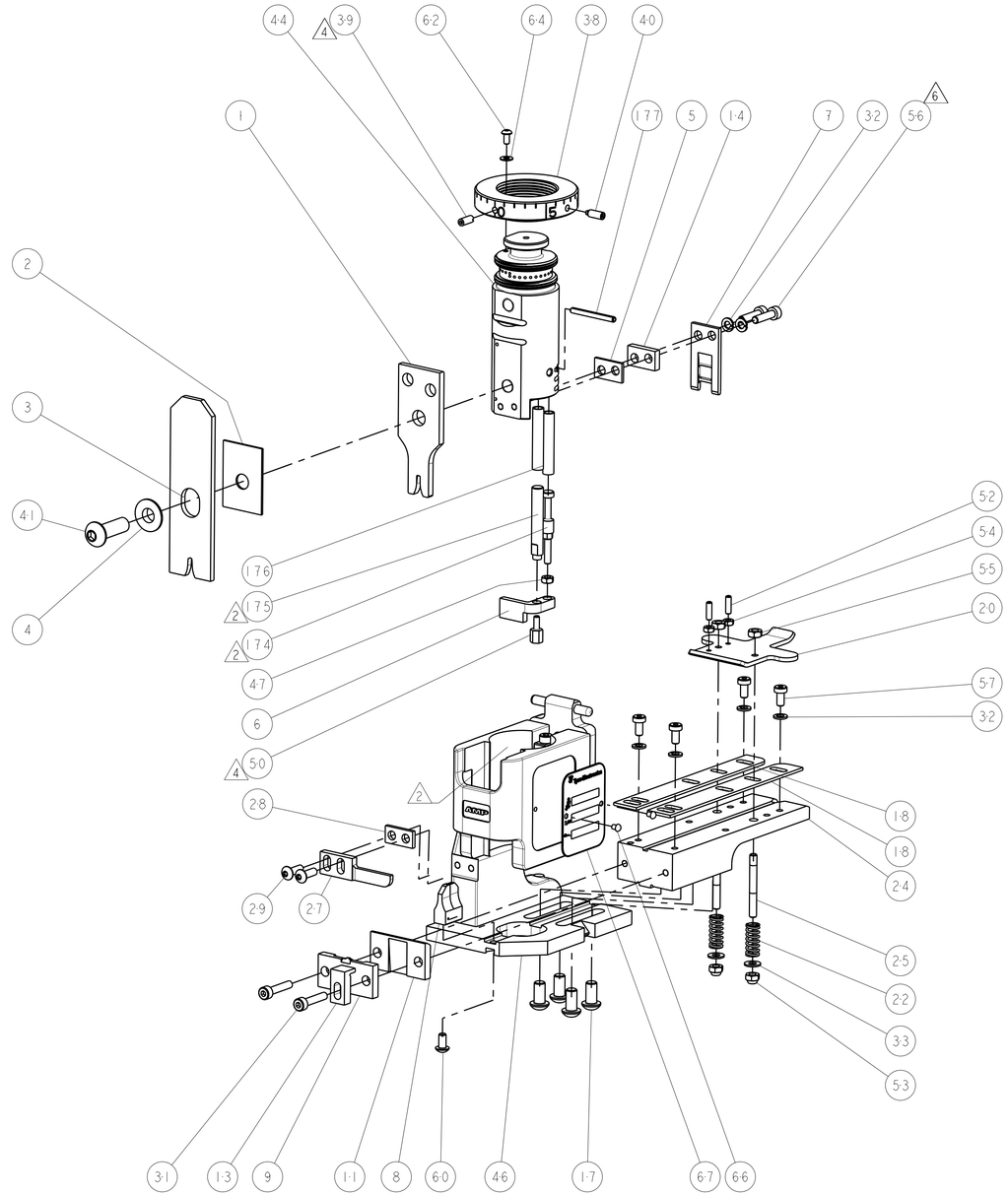

1. RECOMMENDED SPARE PARTS.
2. GREASE BEARING SURFACES LIGHTLY.
3. LUBRICATE DAILY PER THE APPLICATOR INSTRUCTION SHEET SUPPLIED WITH THE APPLICATOR.
4. APPLY P/N 1-23419-5 LOCTITE® TO THREADS.
5. APPLICATOR SPECIFIC DATA TO BE ENTERED INTO BLANK MEMORY CHIP AT ASSEMBLY.
6. CUT TO LENGTH AT ASSEMBLY.

-	1	1	1-993111-6	PIN, SLOTTED SPRING 3.0 X 30.0	177
-	2	2	3-22280-7	SPRING, COMPRESSION	176
-	1	1	1752353-1	GUIDE PIN,HOLDDOWN	175
-	1	1	1901680-1	GUIDE PIN,HOLDDOWN	174
REF	REF	REF	SEE TABLE	MEMORY CHIP, PROGRAMMED	135
-	1	1	1633565-2	DOCUMENTATION PACKAGE	71
-	1	1	1901048-1	TAG,IDENTIFICATION	67
-	2	2	21017-1	SCREW, DRIVE	66
-	1	1	18028-1	WASHER, FLAT, REG M3	64
-	1	1	1655785-9	SCR, BTN SKT HD CAP (M3 X 6)	62
-	1	1	1655785-1	SCR, BTN SKT HD CAP (M4 X 8)	60
-	4	4	1655783-2	SCR, CAP, SOC HD, LOW HEAD, M4 X 8	57
6 -	2	2	1655316-3	SCR, SKT HD CAP, M4 X 16.0	56
-	2	2	18030-2	NUT, HEX, REG M4	55
-	2	2	18030-1	NUT, HEX, REG M3	54
-	2	2	986965-1	NUT, LOCK, HEX, TORQUE (M4)	53
-	2	2	2-18032-2	SCR, SET, FLT POINT M3 X 10.0	52
-	1	1	1-1752354-3	STANDOFF,HOLD-DOWN	50
-	1	1	1-18030-0	NUT, HEX, REG M3.5	47
-	1	1	1752320-1	EF SYSTEM III APPLICATOR	46
-	1	1	1752308-1	RAM	44
-	1	1	2-1655785-3	SCR, BTN SKT HD CAP (M8 X 25)	41
-	1	1	993002-4	SCREW,SET,SFT TIP	40
-	1	1	1962043-1	PLUNGER,BALL,METRIC	39
-	1	1	1752309-1	RING,INSULATION CRIMP	38
-	2	2	18028-2	WASHER, FLAT, REG M4	33
-	6	6	18026-2	WASHER, SPRG LOCK, REG M4	32
-	2	2	2-1655316-6	SCR, SKT HD CAP, M4 X 20.0	31
-	2	2	1655785-2	SCR, BTN SKT HD CAP (M4 X 12)	29
-	1	1	1-690451-1	SPACER, STRIPPER	28
-	1	1	240639-1	STRIPPER (MACHINING)	27
-	2	2	1320906-1	STUD, THREADED	25
-	1	1	1752371-3	PLATE, STRIP GUIDE	24
-	2	2	22281-7	SPRING, DRAG	22
-	1	1	1752373-1	DRAG	20
-	2	2	1901259-3	GUIDE, LOWER STRIP	18
-	4	4	1655785-5	SCR, BTN SKT HD CAP (M6 X 12)	17
-	1	1	6-240641-9	SPACER	14
1 -	1	1	1752360-1	SPACER,HOLD-DOWN	13
1 -	1	1	240833-2	PLATE, REAR SHEAR	11
1 -	1	1	2-690495-2	PLATE, FRONT SHEAR	9
1 1	2	1	1333216-9	ANVIL, COMBINATION	8
1 -	1	1	1-690474-7	BLADE, SLUG	7
-	1	1	1901681-5	HOLDDOWN, TERMINAL	6
-	1	1	4-240641-8	SPACER	5
-	1	1	238009-1	BLOCK, FL CRIMPER SPACER	4
1 1	2	1	2-854830-8	CRIMPER, INSULATION SPECIAL	3
-	1	1	455888-9	SPACER, CRIMPER	2
1 1	2	1	1-456405-3	CRIMPER, WIRE PREMIUM	1
-77	-71	-1	PART NO	DESCRIPTION	ITEM NO

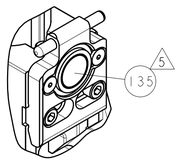

MEMORY CHIP
SCALE 3:4

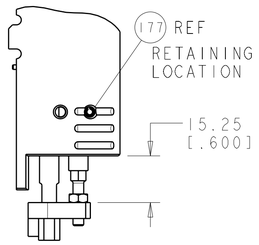

HOLDDOWN SET-UP
SCALE 1:1

THIS DRAWING IS A CONTROLLED DOCUMENT FOR TYCO ELECTRONICS CORPORATION. IT IS SUBJECT TO CHANGE AND THE CONTROLLING ENGINEERING ORGANIZATION SHOULD BE CONTACTED FOR THE LATEST REVISION.

DWN	HOFFNER	19FEB2008
CHK	G.BAILEY	20FEB2008
APVD	G.BAILEY	20FEB2008

Tyco Electronics
Tyco Electronics
Harrisburg, PA 17105-3608

NAME: END FEED SYSTEM III APPLICATOR

DIMENSIONS: mm(INCHES)

TOLERANCES UNLESS OTHERWISE SPECIFIED:
0 PLC ±-
1 PLC ±0.1
2 PLC ±0.02
3 PLC ±0.005
4 PLC ±0.0005
ANGLES ±-

PRODUCT SPEC -
APPLICATION SPEC -
WEIGHT -
MATERIAL - -
FINISH - -

SIZE	CAGE CODE	DRAWING NO	RESTRICTED TO
A1	00779	C-1911222	-

CUSTOMER DRAWING | SCALE 3:5 | SHEET 1 OF 1 | REV A

CUSTOMER VIEWABLE ASSEMBLY

Mouser Electronics

Authorized Distributor

Click to View Pricing, Inventory, Delivery & Lifecycle Information:

TE Connectivity:
1911222-1