THIS DRAWING IS UNPUBLISHED. RELEASED FOR PUBLICATION - ,- .
© COPYRIGHT - By - ALL RIGHTS RESERVED.

REVISIONS

P	LTR	DESCRIPTION	DATE	DWN	APVD
	B	EC 0G3C 0789 04	05FEB05	BSV	JLG
	B1	REVISED PER ECO-09-021826	02SEP09	KK	AEG
	C	REVISED PER ECO-17-002584	10APR2017	BDA	MM

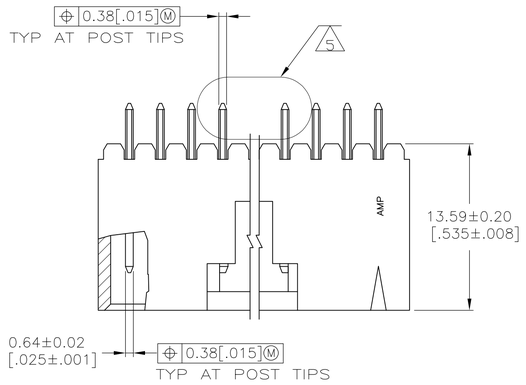

DETAIL Z
POST DETAIL TYP
2 POST MINIMUM

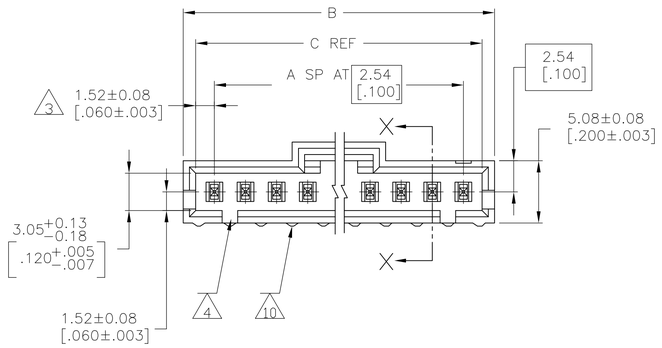

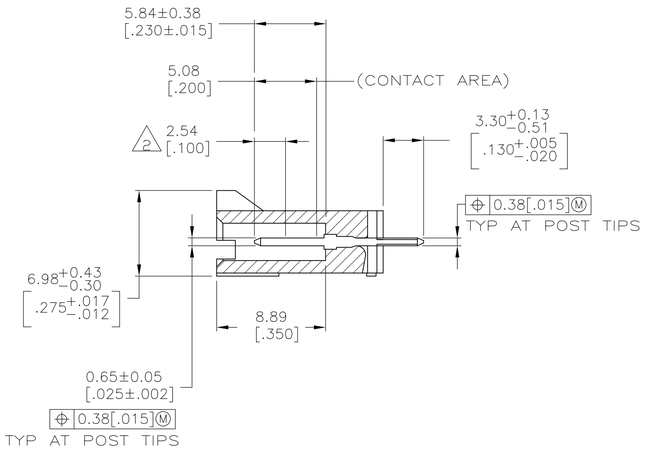

SECTION X–X

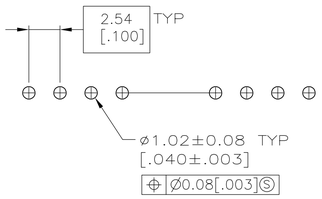

RECOMENDED HOLE LAYOUT

1. .00254[.000100] BRIGHT TIN OVER .00127[.000050] NICKEL.
2. POINT OF MEASUREMENT FOR PLATING THICKNESS.
3. THE NOTED DIMENSIONS APPLY AT THE INTERSECTION OF THE POST AND THE HOUSING.
4. ON ASSEMBLIES WITH FOUR OR MORE POSITIONS, TWO POLARIZATION SLOTS. ON ASSEMBLIES WITH TWO OR THREE POSITIONS, ONE POLARIZATION SLOT.
5. SELECT POST TAILS FORMED TO PROVIDE CONNECTOR HOLD DOWN UNTIL SOLDERED. CONFIGURATION ACCEPTS 0.69[.027]–2.03[.080] THICK PRINTED CIRCUIT BOARD. (SEE DETAIL Z).
6. PARTS TO BE PACKAGED IN A SINGLE OUT TUBE.
7. MATERIAL: HOUSING: FLAME RETARDANT LCP, COLOR – BLACK. CONTACTS: BRASS.
8. .00254[.000100] MATTE TIN OVER .00127[.000050] NICKEL.
9. HIGH TEMPERATURE CONFIGURATION
10. STANDOFFS NOT PRESENT ON UNDERSIDE OF ASSEMBLY
11. OBSOLETE PARTS: OBSOLETE CIS STREAMLINING PER D.RENAUD/D.SINISI

	REMARKS	PLATING	C	B	A	NO. OF POSN	PART NO.
OBSOLETE	9 10	8	36.07 [1.420]	37.97 [1.495]	13	14	5-147060-2
	9 10	8	8.13 [.320]	10.03 [.395]	2	3	5-147060-1
11 OBSOLETE	~~9~~	~~1~~	~~36.07 [1.420]~~	~~37.97 [1.495]~~	~~13~~	~~14~~	~~147060-2~~
	9	1	8.13 [.320]	10.03 [.395]	2	3	147060-1

THIS DRAWING IS A CONTROLLED DOCUMENT.

DIMENSIONS: mm [INCHES]

TOLERANCES UNLESS OTHERWISE SPECIFIED:
0 PLC ± –
1 PLC ± –
2 PLC ± 0.13[.005]
3 PLC ± –
4 PLC ± –
ANGLES ± –

MATERIAL 7

FINISH SEE TABLE

DWN S. SHUEY 3-5-91
CHK M. RIDER 2-14-92
APVD –
PRODUCT SPEC 108-25034
APPLICATION SPEC 114-25026
WEIGHT –

TE Connectivity

NAME HDR ASSY,VERT,SINGLE ROW 2.54[.100]CL,0.64[.025]SQ POST, WITH PLZN&RETENTIVE POSTS,

SIZE	CAGE CODE	DRAWING NO	RESTRICTED TO
A1	00779	C-147060	–

CUSTOMER DRAWING SCALE 4:1 SHEET 1 OF 1 REV C

4805 (1/15)