Right Angle Cable Assemblies

172-1001, 172-1002, 172-1110

KOBICONN

Connection

RCA Plug RCA Plug

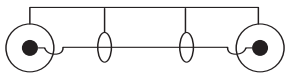

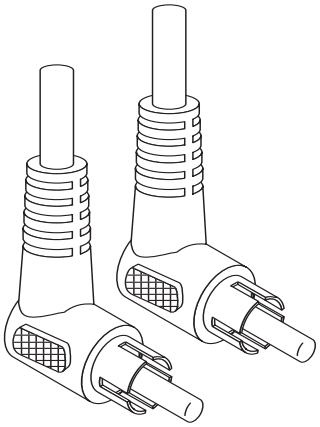

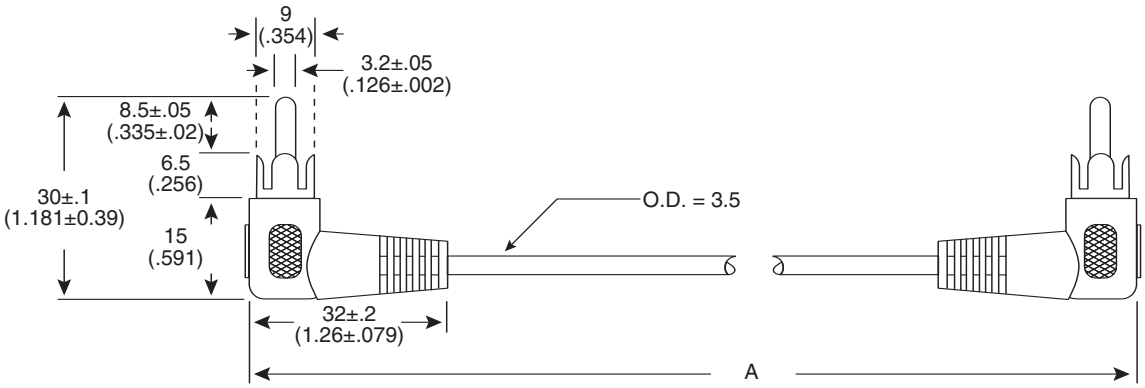

DIMENSIONS: mm (IN)

SPECIFICATIONS	
Type:	RCA Phono Plug/Plug, Shielded
Jacket:	Gray PVC
Conductor:	26AWG
Shield:	.12mm x 28
Cable O.D.:	3.5mm
Temperature:	60°C
Resistance:	0.15Ω per Meter
Voltage Rating:	24VDC
Tip to Tip, Shield to Sheild	

Mouser Stock No.	Length "A" (mm/in)	TOL (mm/in)
172-1001	920 (36)	30 (1.181)
172-1002	1525 (60)	50 (1.969)
172-1110	3050 (120)	100 (3.937)

Right Angle Cable Assemblies

172-1001, 172-1002, 172-1110

Date Last Revised: 4-6-05

Available from Mouser Electronics
1-800-346-6873
www.mouser.com

KC-300310

Specifications are subject to change without notice. No liability or warranty implied by this information. Environmental compliance based on producer documentation.

Mouser Electronics

Authorized Distributor

Click to View Pricing, Inventory, Delivery & Lifecycle Information:

Kobiconn:

172-1001 172-1002 172-1110