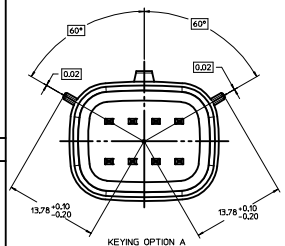

KEYING OPTION A
SCALE 4:1

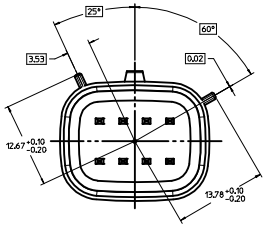

KEYING OPTION B
SCALE 4:1

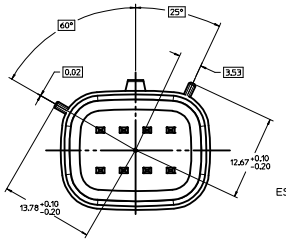

KEYING OPTION C
SCALE 4:1

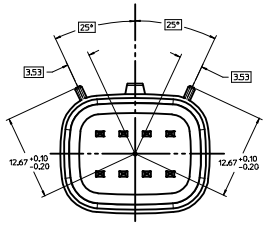

KEYING OPTION D
SCALE 4:1

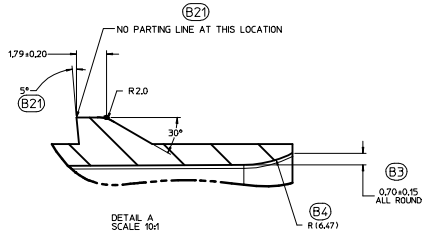

DETAIL A
SCALE 10:1

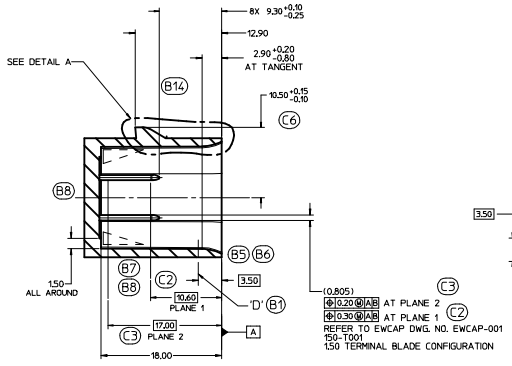

SECTION A-A

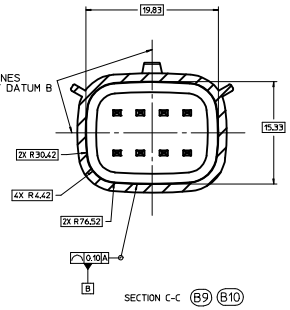

SECTION C-C B9 B10

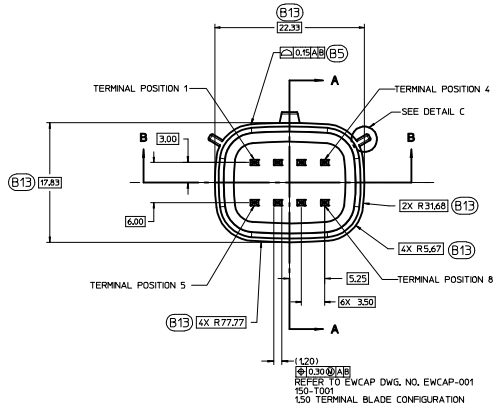

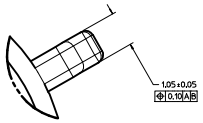

DETAIL C
SCALE 20:1
APPLIES 2X
SEE KEYING OPTION VIEWS
FOR POSITIONS

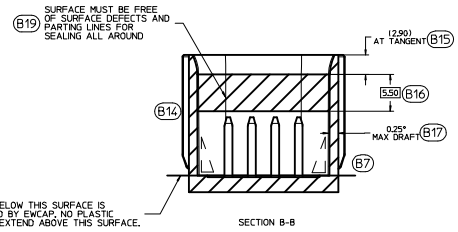

SECTION B-B

IF HEADER IS RECESSED INTO A POCKET, THESE DIMENSIONS REPRESENT THE MINIMUM CLEARANCE REQUIRED FOR THE MATING CONNECTOR SHROUD.

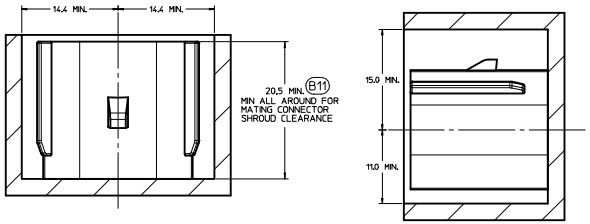

PACKAGING FRAME

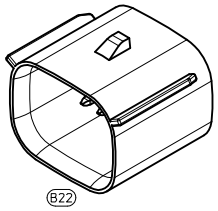

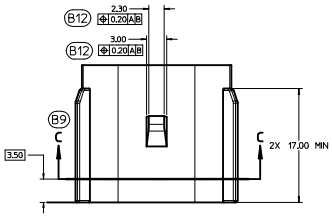

C4 B20

STANDARD NOTICE

This drawing, or portions of it are controlled by the Electrical Wiring Componente Application Partnership (EWCAP) a subgroup of the United States Council for Automotive Research LLC (USCAR LLC). USCAR is an LLC consisting of members from FCA US LLC, Ford Motor Company and GM Corporation. Any change to a EWCAP controlled portion of this drawing, including a revision record change must be approved, in writing, by the responsible EWCAP representative from each USCAR member company. Each EWCAP representative authorized to sign for his or her member company is responsible for obtaining all necessary approvals within that company prior to signing for the approval of the change. EWCAP expressly prohibits any party from changing either any EWCAP controlled portion of this drawing or any associated tooling before receiving approval, signed by the authorized representatives, of the USCAR member companies. Reference to the signed change notice must be entered in the drawing control column.

NOTES: UNLESS OTHERWISE SPECIFIED B18

1. ALL DIMENSIONS SHOWN IN MILLIMETERS. C5
2. DIMENSIONING AND TOLERANCING PER ASME Y14.5-2009
3. 0.25 RADII ON ALL CORNERS SHOWN SHARP.
4. UNSPECIFIED RADII: 0.25 EXCEPT AS NOTED.
5. STANDARD COLORS FOR POLARIZATION (SEE CHART). DEVIATION REQUIRES APPROVAL OF AUTHORIZED PERSON.
6. REFER TO "SAE/USCAR 12 CONNECTOR GUIDELINES" FOR ADDITIONAL REQUIREMENTS.
7. EXCEPT WHERE NOTED, DRAFT ON OUTSIDE SURFACES IS PERMISSIBLE WITHIN TOLERANCE.
8. ⊿ SYMBOL INDICATES DRAFT DIRECTION.
9. FOR TERMINAL MATERIAL, DIMENSIONAL, AND COATING REQUIREMENTS AND ANY BLADE TERMINAL DESIGN INFORMATION NOT SHOWN ON THIS DRAWING SEE EWCAP DRW. NO. EWCAP-001
10. A FULL SHROUD ON THE MATING CONNECTOR IS REQUIRED TO INSURE THAT THE CONNECTOR-HEADER POLARIZATION FEATURES (OPTIONS A THRU D) WILL FUNCTION. THE FULL SHROUD ALSO PREVENTS SCOOP DAMAGE TO THE HEADER PINS. REFER TO "SAE/USCAR-12 CONNECTOR DESIGN GUIDE LINES" FOR ADDITIONAL INFORMATION.
11. REFER TO USCAR/EWCAP PART LIST AS FOUND ON WEBSITE http://www.uscarteams.org
12. THIS IS A 100% CAD GENERATED PART. THE CAD MATHEMATICAL DATA IS THE MASTER FOR THIS PART. FOR DIMENSIONAL OR ANY INFORMATION NOT SHOWN ON THIS DRAWING, ANALYZE THE CAD MODEL.

B2

EWCAP P/N	OPTION	MATING CONNECTOR COLOR
150-S-008-2-D02	D	BLACK
150-S-008-2-C02	C	DK GRAY
150-S-008-2-B02	B	LT GRAY
150-S-008-2-A02	A	BLACK

CHANGE SERIAL NUMBER	LET	REVISION RECORD	DATE	DWN	CHK
132	C6	CORRECTED TOLERANCE CALL OUT FOR LATCH LOCK HEIGHT			
132	C5	UPDATED CALL OUT FOR THE REVISION OF GD&T FROM ASME Y14.5-1994 TO Y14.5-2009 IN THE NOTES			
132	C4	UPDATED THE STANDARD NOTICE TO THE LATEST TEMPLATE			
132	C3	ADDED PLANE 2			
132	C2	ADDED PLANE 1			
132	C1	ADDED CALL OUT "CENTER PLANES ESTABLISHED BY DATUM B"	02-10-17	MV	KB
095	B22	CHANGED ISO VIEW SCALE TO 4:1, WAS 1:1			
095	B21	ADDED PARTING LINE NOTE TO DETAIL A, REMOVED NOTE BACK ANGLE OPTIONAL FROM 5°			
095	B20	CORRECTED CHRYSLER GROUP LLC NOMENCLATURE			
095	B19	MOVED NOTE TO SECTION B-B			
095	B18	UPDATED NOTES			
095	B17	ADDED 0.25° MAX DRAFT ANGLE ALL AROUND			
095	B16	ADDED 5.50			
095	B15	ADDED AT TANGENT NOTE			
095	B14	REMOVED DATUM D			
095	B13	ADDED BASIC DIMENSIONS FOR PROFILE CONTROL			
095	B12	ADDED 0.20 A B			
095	B11	DIMENSIONED TO DATUM A			
095	B10	SEALING SURFACE DIMENSIONS MOVED TO SECTION C-C			
095	B9	ADDED SECTION C-C			
095	B8	REMOVED 15.20 AND 2.50 FROM SECTION A-A			
095	B7	ADDED DRAFT ANGLE DIRECTION			
095	B6	REMOVED 0.80 +0.10/-0.20 ALL AROUND			
095	B5	REPLACED WALL THICKNESS CONTROL WITH PROFILE OF A SURFACE			
095	B4	ADDED R(6.47)			
095	B3	ADDED 0.70 ±0.15 ALL AROUND			
095	B2	UPDATED CONNECTOR COLORS			
095	B1	SURFACE 'D' RELOCATED TO 3.50 B AS AT 8.20	03-21-12	KC	MV
	A	RELEASED	10-17-07	MV	DG

TOLERANCES (UNLESS OTHERWISE SPECIFIED)
DIMENSIONS ARE IN MILLIMETERS
ANGLES ±3°
.X ±0.2 .XX ±0.10

THIRD ANGLE PROJECTION

EWCAP

SCALE 4:1 | DRAWN BY K.CUNNINGHAM | CHECKED BY M.VANSLAMBROUCK | DATE 03-21-12

TITLE
DIRECT CONNECT INTERFACE
8 WAY (2 X 4) 1.5 MM SEALED MALE

SHEET 1 OF 1 | DRAWING NUMBER 150-S-008-2-Z02 | SIZE E | DO NOT SCALE DRAWING COMPUTER AIDED DRAWING | REVISION LEVEL C

molex

MX150 RECEPTACLE 2X4 SEALED ASSEMBLY MAT SEAL
BOM AND PIN OUT SHEET

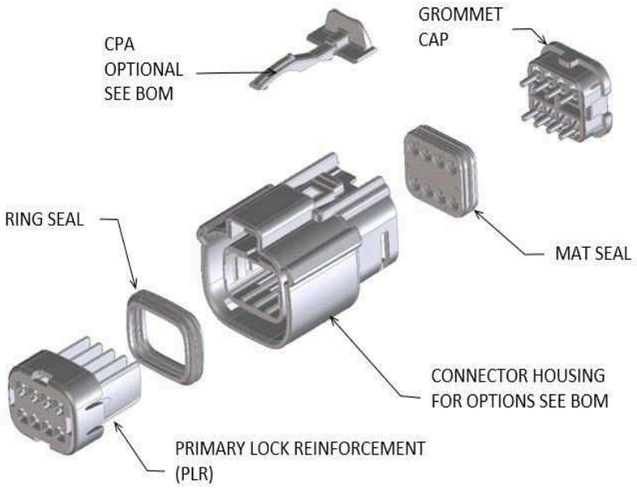

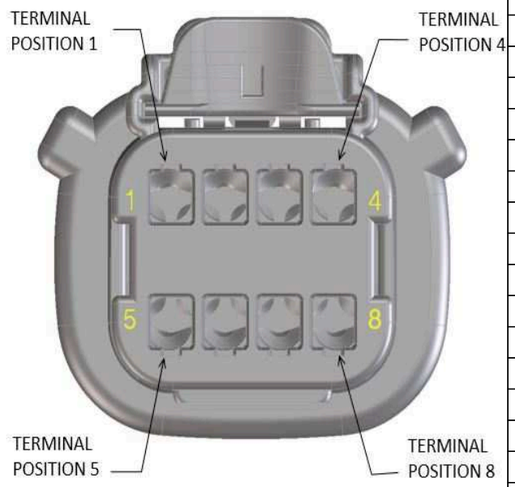

ABBREVIATION	DESCRIPTION	COLOR	MATERIAL
A-BLACK	HOUSING, KEYING OPTION A	BLACK	SPS/NYLON GF20
B-LIGHT GRAY	HOUSING, KEYING OPTION B	LIGHT GRAY	SPS/NYLON GF20
C-BROWN	HOUSING, KEYING OPTION C	BROWN	SPS/NYLON GF20
D-GREEN	HOUSING, KEYING OPTION D	GREEN	SPS/NYLON GF20
C-DARK GRAY	HOUSING, KEYING OPTION C	DARK GRAY	SPS/NYLON GF20
D-STONE GRAY	HOUSING, KEYING OPTION D	STONE GRAY	SPS/NYLON GF20
D-BLACK	HOUSING, KEYING OPTION D	BLACK	SPS/NYLON GF20
A-YELLOW	HOUSING, KEYING OPTION A	YELLOW	SPS/NYLON GF20
A-BLACK-CLIP	HOUSING, KEYING OPTION A WITH CLIPSLOT	BLACK	SPS/NYLON GF20
B-LIGHT GRAY-CLIP	HOUSING, KEYING OPTION B WITH CLIPSLOT	LIGHT GRAY	SPS/NYLON GF20
C-BROWN-CLIP	HOUSING, KEYING OPTION C WITH CLIPSLOT	BROWN	SPS/NYLON GF20
D-GREEN-CLIP	HOUSING, KEYING OPTION D WITH CLIPSLOT	GREEN	SPS/NYLON GF20
C-DARK GRAY-CLIP	HOUSING, KEYING OPTION C WITH CLIPSLOT	DARK GRAY	SPS/NYLON GF20
D-STONE GRAY-CLIP	HOUSING, KEYING OPTION D WITH CLIPSLOT	STONE GRAY	SPS/NYLON GF20
D-BLACK-CLIP	HOUSING, KEYING OPTION D WITH CLIPSLOT	BLACK	SPS/NYLON GF20
GCO	GROMMET CAP (OPEN)	BLACK	SPS/NYLON GF20
GCP	GROMMET CAP (PLUGGED)	BLACK	SPS/NYLON GF20
PLR	PLR	NATURAL	SPS/NYLON GF20
CPA	CPA	RED	PBT GF30
M	MAT SEAL	LIGHT BLUE	INHERENTLY LUBRICATED SILICONE
RG	RING SEAL	GREEN	INHERENTLY LUBRICATED SILICONE
RR	RING SEAL	RUST RED	INHERENTLY LUBRICATED SILICONE

FOR ADDITIONAL INFORMATION SEE SD-33472-0001

ASSEMBLY DESCRIPTION	ASSEMBLY PART NUMBER	COMPONENT						BLOCKED TERMINALS				STATUS	COMMENT	OPTIONAL ATTACHMENTS SOLD SEPARATELY			
		THE PRESENCE OF AN ABBREVIATION INDICATES THE PRESENCE OF THAT COMPONENT						CAVITY WITH A NUMBER INDICATES BLOCKED TERMINAL POSITION CAVITY WITHOUT A NUMBER INDICATES OPEN TERMINAL POSITION									
		HOUSING KEY/COLOR	GROMMET CAP	PLR	CPA	MAT SEAL	RING SEAL							BACKSHELL WITH RIBS	BACKSHELL WITHOUT RIBS	90° ADAPTOR WITH RIBS	90° ADAPTOR WITHOUT RIBS
MX150 ASSY RCP 2X4 BK A/8	334720801	A-BLACK	GCO	PLR		M	RG	- -	- -	- -	- -	PLANNED OBSOLESCENCE	SEE 334724801	N/A	N/A	N/A	N/A
MX150 ASSY RCP 2X4 LG B/8	334720802	B-LIGHT GRAY	GCO	PLR		M	RG	- -	- -	- -	- -	PLANNED OBSOLESCENCE	SEE 334724802	N/A	N/A	N/A	N/A
MX150 ASSY RCP 2X4 BR C/8	334720803	C-BROWN	GCO	PLR		M	RG	- -	- -	- -	- -	PLANNED OBSOLESCENCE	SEE 334724879	N/A	N/A	N/A	N/A
MX150 ASSY RCP 2X4 GR D/8	334720804	D-GREEN	GCO	PLR		M	RG	- -	- -	- -	- -	PLANNED OBSOLESCENCE	SEE 334724880	N/A	N/A	N/A	N/A
MX150 ASSY RCP 2X4 BK D/8	334720805	D-BLACK	GCO	PLR		M	RG	- -	- -	- -	- -	PLANNED OBSOLESCENCE	SEE 334724805	N/A	N/A	N/A	N/A
MX150 ASSY RCP 2X4 CPA BK A/8	334720806	A-BLACK	GCO	PLR	CPA	M	RG	- -	- -	- -	- -	PLANNED OBSOLESCENCE	SEE 334724806	N/A	N/A	N/A	N/A
MX150 ASSY RCP 2X4 CPA LG B/8	334720807	B-LIGHT GRAY	GCO	PLR	CPA	M	RG	- -	- -	- -	- -	PLANNED OBSOLESCENCE	SEE 334724807	N/A	N/A	N/A	N/A
MX150 ASSY RCP 2X4 CPA BR C/8	334720808	C-BROWN	GCO	PLR	CPA	M	RG	- -	- -	- -	- -	PLANNED OBSOLESCENCE	SEE 334724881	N/A	N/A	N/A	N/A
MX150 ASSY RCP 2X4 CPA GR D/8	334720809	D-GREEN	GCO	PLR	CPA	M	RG	- -	- -	- -	- -	PLANNED OBSOLESCENCE	SEE 334724882	N/A	N/A	N/A	N/A
MX150 ASSY RCP 2X4 BK A/7	334720811	A-BLACK	GCP	PLR		M	RG	- -	- -	- -	4 -	PLANNED OBSOLESCENCE	SEE 334724811	N/A	N/A	N/A	N/A
MX150 ASSY RCP 2X4 LG B/7	334720812	B-LIGHT GRAY	GCP	PLR		M	RG	- -	- -	- -	4 -	PLANNED OBSOLESCENCE	SEE 334724812	N/A	N/A	N/A	N/A
MX150 ASSY RCP 2X4 BR C/7	334720813	C-BROWN	GCP	PLR		M	RG	- -	- -	- -	4 -	PLANNED OBSOLESCENCE		N/A	N/A	N/A	N/A
MX150 ASSY RCP 2X4 GR D/7	334720814	D-GREEN	GCP	PLR		M	RG	- -	- -	- -	4 -	PLANNED OBSOLESCENCE	SEE 334725026	N/A	N/A	N/A	N/A

molex

MX150 RECEPTACLE 2X4 SEALED ASSEMBLY MAT SEAL
BOM AND PIN OUT SHEET

ASSEMBLY DESCRIPTION	ASSEMBLY PART NUMBER	COMPONENT THE PRESENCE OF AN ABBREVIATION INDICATES THE PRESENCE OF THAT COMPONENT						BLOCKED TERMINALS CAVITY WITH A NUMBER INDICATES BLOCKED TERMINAL POSITION CAVITY WITHOUT A NUMBER INDICATES OPEN TERMINAL POSITION				STATUS	COMMENT	OPTIONAL ATTACHMENTS SOLD SEPARATELY			
		HOUSING KEY/COLOR	GROMMET CAP	PLR	CPA	MAT SEAL	RING SEAL							BACKSHELL WITH RIBS	BACKSHELL WITHOUT RIBS	90^0 ADAPTOR WITH RIBS	90^0 ADAPTOR WITHOUT RIBS
MX150 ASSY RCP 2X4 CPA BK A/7	334720816	A-BLACK	GCP	PLR	CPA	M	RG	- -	- -	- -	4 -	PLANNED OBSOLESCENCE	SEE 334724816	N/A	N/A	N/A	N/A
MX150 ASSY RCP 2X4 CPA LG B/7	334720817	B-LIGHT GRAY	GCP	PLR	CPA	M	RG	- -	- -	- -	4 -	PLANNED OBSOLESCENCE	SEE 334724817	N/A	N/A	N/A	N/A
MX150 ASSY RCP 2X4 CPA BR C/7	334720818	C-BROWN	GCP	PLR	CPA	M	RG	- -	- -	- -	4 -	PLANNED OBSOLESCENCE		N/A	N/A	N/A	N/A
MX150 ASSY RCP 2X4 CPA GR D/7	334720819	D-GREEN	GCP	PLR	CPA	M	RG	- -	- -	- -	4 -	PLANNED OBSOLESCENCE	SEE 334725009	N/A	N/A	N/A	N/A
MX150 ASSY RCP 2X4 BK A/6	334720821	A-BLACK	GCP	PLR		M	RG	- 5	- -	- -	4 -	PLANNED OBSOLESCENCE	SEE 334724821	N/A	N/A	N/A	N/A
MX150 ASSY RCP 2X4 LG B/6	334720822	B-LIGHT GRAY	GCP	PLR		M	RG	- 5	- -	- -	4 -	PLANNED OBSOLESCENCE	SEE 334724822	N/A	N/A	N/A	N/A
MX150 ASSY RCP 2X4 BR C/6	334720823	C-BROWN	GCP	PLR		M	RG	- 5	- -	- -	4 -	PLANNED OBSOLESCENCE		N/A	N/A	N/A	N/A
MX150 ASSY RCP 2X4 GR D/6	334720824	D-GREEN	GCP	PLR		M	RG	- 5	- -	- -	4 -	PLANNED OBSOLESCENCE		N/A	N/A	N/A	N/A
MX150 ASSY RCP 2X4 CPA BK A/6	334720826	A-BLACK	GCP	PLR	CPA	M	RG	- 5	- -	- -	4 -	PLANNED OBSOLESCENCE	SEE 334724826	N/A	N/A	N/A	N/A
MX150 ASSY RCP 2X4 CPA LG B/6	334720827	B-LIGHT GRAY	GCP	PLR	CPA	M	RG	- 5	- -	- -	4 -	PLANNED OBSOLESCENCE	SEE 334724827	N/A	N/A	N/A	N/A
MX150 ASSY RCP 2X4 CPA BR C/6	334720828	C-BROWN	GCP	PLR	CPA	M	RG	- 5	- -	- -	4 -	PLANNED OBSOLESCENCE		N/A	N/A	N/A	N/A
MX150 ASSY RCP 2X4 CPA GR D/6	334720829	D-GREEN	GCP	PLR	CPA	M	RG	- 5	- -	- -	4 -	PLANNED OBSOLESCENCE	SEE 334725010	N/A	N/A	N/A	N/A
MX150 ASSY RCP 2X4 BK A/5	334720831	A-BLACK	GCP	PLR		M	RG	1 5	- -	- -	4 -	PLANNED OBSOLESCENCE	SEE 334724831	N/A	N/A	N/A	N/A
MX150 ASSY RCP 2X4 LG B/5	334720832	B-LIGHT GRAY	GCP	PLR		M	RG	1 5	- -	- -	4 -	PLANNED OBSOLESCENCE	SEE 334724832	N/A	N/A	N/A	N/A
MX150 ASSY RCP 2X4 BR C/5	334720833	C-BROWN	GCP	PLR		M	RG	1 5	- -	- -	4 -	PLANNED OBSOLESCENCE		N/A	N/A	N/A	N/A
MX150 ASSY RCP 2X4 GR D/5	334720834	D-GREEN	GCP	PLR		M	RG	1 5	- -	- -	4 -	PLANNED OBSOLESCENCE		N/A	N/A	N/A	N/A
MX150 ASSY RCP 2X4 CPA BK A/5	334720836	A-BLACK	GCP	PLR	CPA	M	RG	1 5	- -	- -	4 -	PLANNED OBSOLESCENCE	SEE 334724836	N/A	N/A	N/A	N/A
MX150 ASSY RCP 2X4 CPA LG B/5	334720837	B-LIGHT GRAY	GCP	PLR	CPA	M	RG	1 5	- -	- -	4 -	PLANNED OBSOLESCENCE	SEE 334724837	N/A	N/A	N/A	N/A
MX150 ASSY RCP 2X4 CPA BR C/5	334720838	C-BROWN	GCP	PLR	CPA	M	RG	1 5	- -	- -	4 -	PLANNED OBSOLESCENCE		N/A	N/A	N/A	N/A
MX150 ASSY RCP 2X4 CPA GR D/5	334720839	D-GREEN	GCP	PLR	CPA	M	RG	1 5	- -	- -	4 -	PLANNED OBSOLESCENCE		N/A	N/A	N/A	N/A
MX150 ASSY RCP 2X4 BK A/4	334720841	A-BLACK	GCP	PLR		M	RG	1 5	- -	- -	4 8	PLANNED OBSOLESCENCE	SEE 334724841	N/A	N/A	N/A	N/A
MX150 ASSY RCP 2X4 LG B/4	334720842	B-LIGHT GRAY	GCP	PLR		M	RG	1 5	- -	- -	4 8	PLANNED OBSOLESCENCE	SEE 334724842	N/A	N/A	N/A	N/A
MX150 ASSY RCP 2X4 BR C/4	334720843	C-BROWN	GCP	PLR		M	RG	1 5	- -	- -	4 8	PLANNED OBSOLESCENCE		N/A	N/A	N/A	N/A
MX150 ASSY RCP 2X4 GR D/4	334720844	D-GREEN	GCP	PLR		M	RG	1 5	- -	- -	4 8	PLANNED OBSOLESCENCE		N/A	N/A	N/A	N/A
MX150 ASSY RCP 2X4 CPA BK A/4	334720846	A-BLACK	GCP	PLR	CPA	M	RG	1 5	- -	- -	4 8	PLANNED OBSOLESCENCE	SEE 334724846	N/A	N/A	N/A	N/A
MX150 ASSY RCP 2X4 CPA LG B/4	334720847	B-LIGHT GRAY	GCP	PLR	CPA	M	RG	1 5	- -	- -	4 8	PLANNED OBSOLESCENCE	SEE 334724847	N/A	N/A	N/A	N/A
MX150 ASSY RCP 2X4 CPA BR C/4	334720848	C-BROWN	GCP	PLR	CPA	M	RG	1 5	- -	- -	4 8	PLANNED OBSOLESCENCE		N/A	N/A	N/A	N/A

molex

MX150 RECEPTACLE 2X4 SEALED ASSEMBLY MAT SEAL
BOM AND PIN OUT SHEET

ASSEMBLY DESCRIPTION	ASSEMBLY PART NUMBER	COMPONENT THE PRESENCE OF AN ABBREVIATION INDICATES THE PRESENCE OF THAT COMPONENT						BLOCKED TERMINALS CAVITY WITH A NUMBER INDICATES BLOCKED TERMINAL POSITION CAVITY WITHOUT A NUMBER INDICATES OPEN TERMINAL POSITION				STATUS	COMMENT	OPTIONAL ATTACHMENTS SOLD SEPARATELY			
		HOUSING KEY/COLOR	GROMMET CAP	PLR	CPA	MAT SEAL	RING SEAL							BACKSHELL WITH RIBS	BACKSHELL WITHOUT RIBS	90° ADAPTOR WITH RIBS	90° ADAPTOR WITHOUT RIBS
MX150 ASSY RCP 2X4 CPA GR D/4	334720849	D-GREEN	GCP	PLR	CPA	M	RG	1	-	-	4	PLANNED OBSOLESCENCE		N/A	N/A	N/A	N/A
								5	-	-	8						
MX150 ASSY RCP 2X4 BK A/0	334720851	A-BLACK	GCP	PLR		M	RG	1	2	3	4	PLANNED OBSOLESCENCE	SEE 334724851	N/A	N/A	N/A	N/A
								5	6	7	8						
MX150 ASSY RCP 2X4 LG B/0	334720852	B-LIGHT GRAY	GCP	PLR		M	RG	1	2	3	4	PLANNED OBSOLESCENCE	SEE 334724852	N/A	N/A	N/A	N/A
								5	6	7	8						
MX150 ASSY RCP 2X4 BR C/0	334720853	C-BROWN	GCP	PLR		M	RG	1	2	3	4	PLANNED OBSOLESCENCE		N/A	N/A	N/A	N/A
								5	6	7	8						
MX150 ASSY RCP 2X4 GR D/0	334720854	D-GREEN	GCP	PLR		M	RG	1	2	3	4	PLANNED OBSOLESCENCE	SEE 334725057	N/A	N/A	N/A	N/A
								5	6	7	8						
MX150 ASSY RCP 2X4 BK D/0	334720855	D-BLACK	GCP	PLR		M	RG	1	2	3	4	PLANNED OBSOLESCENCE	SEE 334724855	N/A	N/A	N/A	N/A
								5	6	7	8						
MX150 ASSY RCP 2X4 CPA BK A/5	334720856	A-BLACK	GCP	PLR	CPA	M	RG	-	2	-	-	PLANNED OBSOLESCENCE	SEE 334724856	N/A	N/A	N/A	N/A
								-	6	7	-						
MX150 ASSY RCP 2X4 CPA BK A/3	334720857	A-BLACK	GCP	PLR	CPA	M	RG	1	2	-	-	PLANNED OBSOLESCENCE	SEE 334724857	N/A	N/A	N/A	N/A
								5	6	7	-						
MX150 ASSY RCP 2X4 CPA BK A/2	334720858	A-BLACK	GCP	PLR	CPA	M	RG	1	2	3	-	PLANNED OBSOLESCENCE	SEE 334724858	N/A	N/A	N/A	N/A
								5	6	7	-						
MX150 ASSY RCP 2X4 BK A/2	334720859	A-BLACK	GCP	PLR		M	RG	1	2	3	-	PLANNED OBSOLESCENCE	SEE 334724859	N/A	N/A	N/A	N/A
								-	6	7	8						
MX150 ASSY RCP 2X4 BK D/7	334720860	D-BLACK	GCP	PLR		M	RG	-	-	-	4	PLANNED OBSOLESCENCE	SEE 334724860	N/A	N/A	N/A	N/A
								-	-	-	-						
MX150 ASSY RCP 2X4 BK A/7	334720861	A-BLACK	GCP	PLR		M	RG	-	-	-	-	PLANNED OBSOLESCENCE	SEE 334724861	N/A	N/A	N/A	N/A
								-	-	-	8						
MX150 ASSY RCP 2X4 BK A/7	334720862	A-BLACK	GCP	PLR		M	RG	1	-	-	-	PLANNED OBSOLESCENCE	SEE 334724862	N/A	N/A	N/A	N/A
								-	-	-	-						
MX150 ASSY RCP 2X4 BK A/4	334720863	A-BLACK	GCP	PLR		M	RG	-	2	3	-	PLANNED OBSOLESCENCE	SEE 334724863	N/A	N/A	N/A	N/A
								5	-	-	8						
MX150 ASSY RCP 2X4 BK A/5	334720864	A-BLACK	GCP	PLR		M	RG	1	-	3	-	PLANNED OBSOLESCENCE	SEE 334724864	N/A	N/A	N/A	N/A
								5	-	-	-						
MX150 ASSY RCP 2X4 BK A/6	334720865	A-BLACK	GCP	PLR		M	RG	1	-	-	-	PLANNED OBSOLESCENCE	SEE 334724865	N/A	N/A	N/A	N/A
								-	6	-	-						
MX150 ASSY RCP 2X4 BK A/3	334720866	A-BLACK	GCP	PLR		M	RG	-	2	3	-	PLANNED OBSOLESCENCE	SEE 334724866	N/A	N/A	N/A	N/A
								5	6	-	8						
MX150 ASSY RCP 2X4 BK A/4	334720867	A-BLACK	GCP	PLR		M	RG	1	-	3	-	PLANNED OBSOLESCENCE	SEE 334724867	N/A	N/A	N/A	N/A
								5	6	-	-						
MX150 ASSY RCP 2X4 BK A/5	334720868	A-BLACK	GCP	PLR		M	RG	-	-	-	-	PLANNED OBSOLESCENCE	SEE 334724868	N/A	N/A	N/A	N/A
								5	6	-	8						
MX150 ASSY RCP 2X4 BK A/7	334720869	A-BLACK	GCP	PLR		M	RG	-	-	-	-	PLANNED OBSOLESCENCE	SEE 334724869	N/A	N/A	N/A	N/A
								-	6	-	-						
MX150 ASSY RCP 2X4 BK A/2	334720870	A-BLACK	GCP	PLR		M	RG	1	-	3	-	PLANNED OBSOLESCENCE	SEE 334724870	N/A	N/A	N/A	N/A
								5	6	7	8						
MX150 ASSY RCP 2X4 BK A/2	334720871	A-BLACK	GCP	PLR		M	RG	-	2	3	4	PLANNED OBSOLESCENCE	SEE 334724871	N/A	N/A	N/A	N/A
								5	6	7	-						
MX150 ASSY RCP 2X4 BK A/6	334720872	A-BLACK	GCP	PLR		M	RG	-	-	-	-	PLANNED OBSOLESCENCE	SEE 334724872	N/A	N/A	N/A	N/A
								-	-	7	8						
MX150 ASSY RCP 2X4 BK A/3	334720873	A-BLACK	GCP	PLR		M	RG	-	2	3	-	PLANNED OBSOLESCENCE	SEE 334724873	N/A	N/A	N/A	N/A
								-	6	7	8						
MX150 ASSY RCP 2X4 BK A/6	334720874	A-BLACK	GCP	PLR		M	RG	-	2	3	-	PLANNED OBSOLESCENCE	SEE 334724874	N/A	N/A	N/A	N/A
								-	-	-	-						
MX150 ASSY RCP 2X4 BK A/5	334720878	A-BLACK	GCP	PLR		M	RG	-	-	3	-	PLANNED OBSOLESCENCE	SEE 334724878	N/A	N/A	N/A	N/A
								5	6	-	-						
MX150 ASSY RCP 2X4 DG C/8	334720879	C-DARK GRAY	GCO	PLR		M	RG	-	-	-	-	PLANNED OBSOLESCENCE	SEE 334724879	N/A	N/A	N/A	N/A
								-	-	-	-						

molex

MX150 RECEPTACLE 2X4 SEALED ASSEMBLY MAT SEAL
BOM AND PIN OUT SHEET

ASSEMBLY DESCRIPTION	ASSEMBLY PART NUMBER	COMPONENT THE PRESENCE OF AN ABBREVIATION INDICATES THE PRESENCE OF THAT COMPONENT						BLOCKED TERMINALS CAVITY WITH A NUMBER INDICATES BLOCKED TERMINAL POSITION CAVITY WITHOUT A NUMBER INDICATES OPEN TERMINAL POSITION				STATUS	COMMENT	OPTIONAL ATTACHMENTS SOLD SEPARATELY			
		HOUSING KEY/COLOR	GROMMET CAP	PLR	CPA	MAT SEAL	RING SEAL							BACKSHELL WITH RIBS	BACKSHELL WITHOUT RIBS	90° ADAPTOR WITH RIBS	90° ADAPTOR WITHOUT RIBS
MX150 ASSY RCP 2X4 SG D/8	334720880	D-STONE GRAY	GCO	PLR		M	RG	-	-	-	-	PLANNED OBSOLESCENCE	SEE 334724880	N/A	N/A	N/A	N/A
								-	-	-	-						
MX150 ASSY RCP 2X4 CPA DG C/8	334720881	C-DARK GRAY	GCO	PLR	CPA	M	RG	-	-	-	-	PLANNED OBSOLESCENCE	SEE 334724881	N/A	N/A	N/A	N/A
								-	-	-	-						
MX150 ASSY RCP 2X4 CPA SG D/8	334720882	D-STONE GRAY	GCO	PLR	CPA	M	RG	-	-	-	-	PLANNED OBSOLESCENCE	SEE 334724882	N/A	N/A	N/A	N/A
								-	-	-	-						
MX150 ASSY RCP 2X4 BK A/2	334720883	A-BLACK	GCP	PLR		M	RG	-	2	3	4	PLANNED OBSOLESCENCE	SEE 334724883	N/A	N/A	N/A	N/A
								5	-	7	8						
MX150 ASSY RCP 2X4 BK A/5	334720884	A-BLACK	GCP	PLR		M	RG	-	-	3	-	PLANNED OBSOLESCENCE	SEE 334724884	N/A	N/A	N/A	N/A
								-	6	7	-						
MX150 ASSY RCP 2X4 BK A/2	334720885	A-BLACK	GCP	PLR		M	RG	-	2	3	4	PLANNED OBSOLESCENCE	SEE 334724885	N/A	N/A	N/A	N/A
								5	6	-	8						
MX150 ASSY RCP 2X4 BK A/5	334720886	A-BLACK	GCP	PLR		M	RG	-	-	3	-	PLANNED OBSOLESCENCE	SEE 334724886	N/A	N/A	N/A	N/A
								-	6	-	8						
MX150 ASSY RCP 2X4 CPA LG B/7	334720887	B-LIGHT GRAY	GCP	PLR	CPA	M	RG	-	-	-	-	PLANNED OBSOLESCENCE	SEE 334724887	N/A	N/A	N/A	N/A
								-	-	-	8						
MX150 ASSY RCP 2X4 LG B/6	334720888	B-LIGHT GRAY	GCP	PLR		M	RG	1	-	-	-	PLANNED OBSOLESCENCE	SEE 334724888	N/A	N/A	N/A	N/A
								-	6	-	-						
MX150 ASSY RCP 2X4 BK A/6	334720889	A-BLACK	GCP	PLR		M	RG	1	-	-	-	PLANNED OBSOLESCENCE	SEE 334724889	N/A	N/A	N/A	N/A
								5	-	-	-						
MX150 ASSY RCP 2X4 CPA YW A/6	334720890	A-YELLOW	GCP	PLR	CPA	M	RG	-	2	3	-	PLANNED OBSOLESCENCE	SEE 334724890	N/A	N/A	N/A	N/A
								-	-	-	-						
MX150 ASSY RCP 2X4 CPA YW A/8	334720891	A-YELLOW	GCO	PLR	CPA	M	RG	-	-	-	-	PLANNED OBSOLESCENCE	SEE 334724891	N/A	N/A	N/A	N/A
								-	-	-	-						
MX150 ASSY RCP 2X4 YW A/8	334720892	A-YELLOW	GCO	PLR		M	RG	-	-	-	-	PLANNED OBSOLESCENCE	SEE 334724892	N/A	N/A	N/A	N/A
								-	-	-	-						
MX150 ASSY RCP 2X4 CPA BK A/7	334720893	A-BLACK	GCP	PLR	CPA	M	RG	-	-	-	-	PLANNED OBSOLESCENCE	SEE 334724893	N/A	N/A	N/A	N/A
								-	6	-	-						
MX150 ASSY RCP 2X4 CPA BK A/2	334720894	A-BLACK	GCP	PLR	CPA	M	RG	1	2	3	-	PLANNED OBSOLESCENCE	SEE 334724894	N/A	N/A	N/A	N/A
								-	6	7	8						
MX150 ASSY RCP 2X4 BK A/6	334720895	A-BLACK	GCP	PLR		M	RG	1	2	-	-	PLANNED OBSOLESCENCE	SEE 334724895	N/A	N/A	N/A	N/A
								-	-	-	-						
MX150 ASSY RCP 2X4 CS BK A/8	334720901	A-BLACK-CLIP	GCO	PLR		M	RG	-	-	-	-	PLANNED OBSOLESCENCE	SEE 334724901	34951-0811	34951-0821	34951-0831	34951-0841
								-	-	-	-						
MX150 ASSY RCP 2X4 CS LG B/8	334720902	B-LIGHT GRAY-CLIP	GCO	PLR		M	RG	-	-	-	-	PLANNED OBSOLESCENCE	SEE 334724902	34951-0811	34951-0821	34951-0831	34951-0841
								-	-	-	-						
MX150 ASSY RCP 2X4 CS BR C/8	334720903	C-BROWN-CLIP	GCO	PLR		M	RG	-	-	-	-	PLANNED OBSOLESCENCE	SEE 334724922	34951-0811	34951-0821	34951-0831	34951-0841
								-	-	-	-						
MX150 ASSY RCP 2X4 CS GR D/8	334720904	D-GREEN-CLIP	GCO	PLR		M	RG	-	-	-	-	PLANNED OBSOLESCENCE	SEE 334724923	34951-0811	34951-0821	34951-0831	34951-0841
								-	-	-	-						
MX150 ASSY RCP 2X4 CS BK D/8	334720905	D-BLACK-CLIP	GCO	PLR		M	RG	-	-	-	-	PLANNED OBSOLESCENCE	SEE 334724905	34951-0811	34951-0821	34951-0831	34951-0841
								-	-	-	-						
MX150 ASSY RCP 2X4 CS CPA BK A/8	334720906	A-BLACK-CLIP	GCO	PLR	CPA	M	RG	-	-	-	-	PLANNED OBSOLESCENCE	SEE 334724906	34951-0811	34951-0821	34951-0831	34951-0841
								-	-	-	-						
MX150 ASSY RCP 2X4 CS CPA LG B/8	334720907	B-LIGHT GRAY-CLIP	GCO	PLR	CPA	M	RG	-	-	-	-	PLANNED OBSOLESCENCE	SEE 334724907	34951-0811	34951-0821	34951-0831	34951-0841
								-	-	-	-						
MX150 ASSY RCP 2X4 CS CPA BR C/8	334720908	C-BROWN-CLIP	GCO	PLR	CPA	M	RG	-	-	-	-	PLANNED OBSOLESCENCE	SEE 334724924	34951-0811	34951-0821	34951-0831	34951-0841
								-	-	-	-						
MX150 ASSY RCP 2X4 CS CPA GR D/8	334720909	D-GREEN-CLIP	GCO	PLR	CPA	M	RG	-	-	-	-	PLANNED OBSOLESCENCE	SEE 334724925	34951-0811	34951-0821	34951-0831	34951-0841
								-	-	-	-						
MX150 ASSY RCP 2X4 CS BK A/7	334720910	A-BLACK-CLIP	GCP	PLR		M	RG	-	-	-	4	PLANNED OBSOLESCENCE	SEE 334724910	34951-0811	34951-0821	34951-0831	34951-0841
								-	-	-	-						
MX150 ASSY RCP 2X4 CS BK A/6	334720920	A-BLACK-CLIP	GCP	PLR		M	RG	-	-	-	4	PLANNED OBSOLESCENCE	SEE 334724920	34951-0811	34951-0821	34951-0831	34951-0841
								-	-	-	8						

molex

MX150 RECEPTACLE 2X4 SEALED ASSEMBLY MAT SEAL
BOM AND PIN OUT SHEET

ASSEMBLY DESCRIPTION	ASSEMBLY PART NUMBER	COMPONENT: THE PRESENCE OF AN ABBREVIATION INDICATES THE PRESENCE OF THAT COMPONENT						BLOCKED TERMINALS: CAVITY WITH A NUMBER INDICATES BLOCKED TERMINAL POSITION; CAVITY WITHOUT A NUMBER INDICATES OPEN TERMINAL POSITION				STATUS	COMMENT	OPTIONAL ATTACHMENTS SOLD SEPARATELY			
		HOUSING KEY/COLOR	GROMMET CAP	PLR	CPA	MAT SEAL	RING SEAL							BACKSHELL WITH RIBS	BACKSHELL WITHOUT RIBS	90° ADAPTOR WITH RIBS	90° ADAPTOR WITHOUT RIBS
MX150 ASSY RCP 2X4 CS BK A/7	334720921	A-BLACK-CLIP	GCP	PLR		M	RG	-	-	-	-	PLANNED OBSOLESCENCE	SEE 334724921	34951-0811	34951-0821	34951-0831	34951-0841
								-	-	-	8						
MX150 ASSY RCP 2X4 CS DG C/8	334720922	C-DARK GRAY-CLIP	GCO	PLR		M	RG	-	-	-	-	PLANNED OBSOLESCENCE	SEE 334724922	34951-0811	34951-0821	34951-0831	34951-0841
								-	-	-	-						
MX150 ASSY RCP 2X4 CS SG D/8	334720923	D-STONE GRAY-CLIP	GCO	PLR		M	RG	-	-	-	-	PLANNED OBSOLESCENCE	SEE 334724923	34951-0811	34951-0821	34951-0831	34951-0841
								-	-	-	-						
MX150 ASSY RCP 2X4 CS CPA DG C/8	334720924	C-DARK GRAY-CLIP	GCO	PLR	CPA	M	RG	-	-	-	-	PLANNED OBSOLESCENCE	SEE 334724924	34951-0811	34951-0821	34951-0831	34951-0841
								-	-	-	-						
MX150 ASSY RCP 2X4 CS CPA SG D/8	334720925	D-STONE GRAY-CLIP	GCO	PLR	CPA	M	RG	-	-	-	-	PLANNED OBSOLESCENCE	SEE 334724925	34951-0811	34951-0821	34951-0831	34951-0841
								-	-	-	-						
MX150 ASSY RCP 2X4 CS LG B/6	334720926	B-LIGHT GRAY-CLIP	GCP	PLR		M	RG	-	-	-	4	PLANNED OBSOLESCENCE	SEE 334724926	34951-0811	34951-0821	34951-0831	34951-0841
								-	-	-	8						
MX150 ASSY RCP 2X4 CS CPA BK A/6	334720927	A-BLACK-CLIP	GCP	PLR	CPA	M	RG	-	-	-	4	PLANNED OBSOLESCENCE	SEE 334724927	34951-0811	34951-0821	34951-0831	34951-0841
								-	-	-	8						
MX150 ASSY RCP 2X4 CS CPA LG B/6	334720928	B-LIGHT GRAY-CLIP	GCP	PLR	CPA	M	RG	-	-	-	4	PLANNED OBSOLESCENCE	SEE 334724928	34951-0811	34951-0821	34951-0831	34951-0841
								-	-	-	8						
MX150 ASSY RCP 2X4 CS BK A/4	334720929	A-BLACK-CLIP	GCP	PLR		M	RG	-	-	-	4	PLANNED OBSOLESCENCE	SEE 334724929	34951-0811	34951-0821	34951-0831	34951-0841
								5	-	7	8						
MX150 ASSY RCP 2X4 CS BK A/2	334720930	A-BLACK-CLIP	GCP	PLR		M	RG	-	2	3	4	PLANNED OBSOLESCENCE	SEE 334724930	34951-0811	34951-0821	34951-0831	34951-0841
								5	-	7	8						
MX150 ASSY RCP 2X4 CS BK A/4	334720931	A-BLACK-CLIP	GCP	PLR		M	RG	1	2	3	-	PLANNED OBSOLESCENCE	SEE 334724931	34951-0811	34951-0821	34951-0831	34951-0841
								-	6	-	-						
MX150 ASSY RCP 2X4 CS BK A/6	334720932	A-BLACK-CLIP	GCP	PLR		M	RG	1	-	-	-	PLANNED OBSOLESCENCE	SEE 334724932	34951-0811	34951-0821	34951-0831	34951-0841
								-	6	-	-						
MX150 ASSY RCP 2X4 CS CPA BK A/7	334720933	A-BLACK-CLIP	GCP	PLR	CPA	M	RG	-	-	-	-	PLANNED OBSOLESCENCE	SEE 334724933	34951-0811	34951-0821	34951-0831	34951-0841
								-	-	-	8						
MX150 ASSY RCP 2X4 CS CPA LG B/7	334720934	B-LIGHT GRAY-CLIP	GCP	PLR	CPA	M	RG	-	-	-	-	PLANNED OBSOLESCENCE	SEE 334724934	34951-0811	34951-0821	34951-0831	34951-0841
								-	-	-	8						
MX150 ASSY RCP 2X4 CS CPA BK A/2	334720935	A-BLACK-CLIP	GCP	PLR	CPA	M	RG	-	2	3	4	PLANNED OBSOLESCENCE	SEE 334724935	34951-0811	34951-0821	34951-0831	34951-0841
								-	6	7	8						
MX150 ASSY RCP 2X4 CS BK A/5	334720936	A-BLACK-CLIP	GCP	PLR		M	RG	-	-	-	-	PLANNED OBSOLESCENCE	SEE 334724936	34951-0811	34951-0821	34951-0831	34951-0841
								-	6	7	8						
MX150 ASSY RCP 2X4 CS BK A/6	334720937	A-BLACK-CLIP	GCP	PLR		M	RG	-	-	-	-	PLANNED OBSOLESCENCE	SEE 334724937	34951-0811	34951-0821	34951-0831	34951-0841
								5	-	-	8						
MX150 ASSY RCP 2X4 CS BK A/7	334720938	A-BLACK-CLIP	GCP	PLR		M	RG	-	-	-	-	PLANNED OBSOLESCENCE	SEE 334724938	34951-0811	34951-0821	34951-0831	34951-0841
								5	-	-	-						
MX150 ASSY RCP 2X4 CS BK A/3	334720939	A-BLACK-CLIP	GCP	PLR		M	RG	-	-	-	4	PLANNED OBSOLESCENCE	SEE 334724939	34951-0811	34951-0821	34951-0831	34951-0841
								5	6	7	8						
MX150 ASSY RCP 2X4 CS BK A/4	334720940	A-BLACK-CLIP	GCP	PLR		M	RG	1	2	-	-	PLANNED OBSOLESCENCE	SEE 334724940	34951-0811	34951-0821	34951-0831	34951-0841
								5	6	-	-						
MX150 ASSY RCP 2X4 CS BK A/2	334720941	A-BLACK-CLIP	GCP	PLR		M	RG	1	2	3	4	PLANNED OBSOLESCENCE	SEE 334724941	34951-0811	34951-0821	34951-0831	34951-0841
								5	6	-	-						
MX150 ASSY RCP 2X4 CS BK A/5	334720944	A-BLACK-CLIP	GCP	PLR		M	RG	-	-	-	4	PLANNED OBSOLESCENCE	SEE 334724944	34951-0811	34951-0821	34951-0831	34951-0841
								5	-	7	-						
MX150 ASSY RCP 2X4 CS BK A/7	334720945	A-BLACK-CLIP	GCP	PLR		M	RG	-	-	-	-	PLANNED OBSOLESCENCE	SEE 334724945	34951-0811	34951-0821	34951-0831	34951-0841
								-	-	7	-						
MX150 ASSY RCP 2X4 CS BK A/6	334720946	A-BLACK-CLIP	GCP	PLR		M	RG	-	-	3	-	PLANNED OBSOLESCENCE	SEE 334724946	34951-0811	34951-0821	34951-0831	34951-0841
								-	-	7	-						
MX150 ASSY RCP 2X4 BK A/4	334721001	A-BLACK	GCP	PLR		M	RG	1	2	3	4	PLANNED OBSOLESCENCE	SEE 334725001	N/A	N/A	N/A	N/A
								-	-	-	-						
MX150 ASSY RCP 2X4 LG B/7	334721002	B-LIGHT GRAY	GCP	PLR		M	RG	-	-	-	-	PLANNED OBSOLESCENCE	SEE 334725002	N/A	N/A	N/A	N/A
								-	6	-	-						
MX150 ASSY RCP 2X4 BK A/2	334721006	A-BLACK	GCP	PLR		M	RG	1	2	3	4	PLANNED OBSOLESCENCE	SEE 334725006	N/A	N/A	N/A	N/A
								5	6	-	-						

molex

MX150 RECEPTACLE 2X4 SEALED ASSEMBLY MAT SEAL
BOM AND PIN OUT SHEET

ASSEMBLY DESCRIPTION	ASSEMBLY PART NUMBER	COMPONENT THE PRESENCE OF AN ABBREVIATION INDICATES THE PRESENCE OF THAT COMPONENT						BLOCKED TERMINALS CAVITY WITH A NUMBER INDICATES BLOCKED TERMINAL POSITION CAVITY WITHOUT A NUMBER INDICATES OPEN TERMINAL POSITION				STATUS	COMMENT	OPTIONAL ATTACHMENTS SOLD SEPARATELY			
		HOUSING KEY/COLOR	GROMMET CAP	PLR	CPA	MAT SEAL	RING SEAL							BACKSHELL WITH RIBS	BACKSHELL WITHOUT RIBS	90^0 ADAPTOR WITH RIBS	90^0 ADAPTOR WITHOUT RIBS
MX150 ASSY RCP 2X4 CPA BK A/6	334721007	A-BLACK	GCP	PLR	CPA	M	RG	-	-	-	-	PLANNED OBSOLESCENCE	SEE 334725007	N/A	N/A	N/A	N/A
								-	6	7	-						
MX150 ASSY RCP 2X4 CPA BK A/7	334721008	A-BLACK	GCP	PLR	CPA	M	RG	-	-	-	-	PLANNED OBSOLESCENCE	SEE 334725008	N/A	N/A	N/A	N/A
								-	-	7	-						
MX150 ASSY RCP 2X4 CPA SG D/7	334721009	D-STONE GRAY	GCP	PLR	CPA	M	RG	-	-	-	4	PLANNED OBSOLESCENCE	SEE 334725009	N/A	N/A	N/A	N/A
								-	-	-	-						
MX150 ASSY RCP 2X4 CPA SG D/6	334721010	D-STONE GRAY	GCP	PLR	CPA	M	RG	-	-	-	4	PLANNED OBSOLESCENCE	SEE 334725010	N/A	N/A	N/A	N/A
								5	-	-	-						
MX150 ASSY RCP 2X4 CPA SG D/5	334721011	D-STONE GRAY	GCP	PLR	CPA	M	RG	-	-	-	4	PLANNED OBSOLESCENCE	SEE 334725011	N/A	N/A	N/A	N/A
								5	6	-	-						
MX150 ASSY RCP 2X4 BK A/5	334721012	A-BLACK	GCP	PLR		M	RG	-	-	-	4	PLANNED OBSOLESCENCE	SEE 334725012	N/A	N/A	N/A	N/A
								-	-	7	8						
MX150 ASSY RCP 2X4 CPA BK A/2	334721013	A-BLACK	GCP	PLR	CPA	M	RG	-	-	3	4	PLANNED OBSOLESCENCE	SEE 334725013	N/A	N/A	N/A	N/A
								5	6	7	8						
MX150 ASSY RCP 2X4 BK A/2	334721014	A-BLACK	GCP	PLR		M	RG	-	-	3	4	PLANNED OBSOLESCENCE	SEE 334725014	N/A	N/A	N/A	N/A
								5	6	7	8						
MX150 ASSY RCP 2X4 CPA BK A/5	334721015	A-BLACK	GCP	PLR	CPA	M	RG	-	-	-	4	PLANNED OBSOLESCENCE	SEE 334725015	N/A	N/A	N/A	N/A
								-	-	7	8						
MX150 ASSY RCP 2X4 BK A/5	334721016	A-BLACK	GCP	PLR		M	RG	-	-	-	-	PLANNED OBSOLESCENCE	SEE 334725016	N/A	N/A	N/A	N/A
								-	6	7	8						
MX150 ASSY RCP 2X4 BK A/4	334721017	A-BLACK	GCP	PLR		M	RG	1	-	3	4	PLANNED OBSOLESCENCE	SEE 334725017	N/A	N/A	N/A	N/A
								-	-	-	8						
MX150 ASSY RCP 2X4 CPA BK A/4	334721018	A-BLACK	GCP	PLR	CPA	M	RG	-	-	-	-	PLANNED OBSOLESCENCE	SEE 334725018	N/A	N/A	N/A	N/A
								5	6	7	8						
MX150 ASSY RCP 2X4 CPA BK A/6	334721019	A-BLACK	GCP	PLR	CPA	M	RG	-	-	-	-	PLANNED OBSOLESCENCE	SEE 334725019	N/A	N/A	N/A	N/A
								-	-	7	8						
MX150 ASSY RCP 2X4 CPA BK A/2	334721020	A-BLACK	GCP	PLR	CPA	M	RG	-	2	3	4	PLANNED OBSOLESCENCE	SEE 334725020	N/A	N/A	N/A	N/A
								-	6	7	8						
MX150 ASSY RCP 2X4 CPA BK A/0	334721021	A-BLACK	GCP	PLR	CPA	M	RG	1	2	3	4	PLANNED OBSOLESCENCE	SEE 334725021	N/A	N/A	N/A	N/A
								5	6	7	8						
MX150 ASSY RCP 2X4 CPA BK A/6	334721022	A-BLACK	GCP	PLR	CPA	M	RG	1	-	-	-	PLANNED OBSOLESCENCE	SEE 334725022	N/A	N/A	N/A	N/A
								5	-	-	-						
MX150 ASSY RCP 2X4 BK A/4	334721023	A-BLACK	GCP	PLR		M	RG	-	-	-	-	PLANNED OBSOLESCENCE	SEE 334725023	N/A	N/A	N/A	N/A
								5	6	7	8						
MX150 ASSY RCP 2X4 BK A/6	334721024	A-BLACK	GCP	PLR		M	RG	-	-	3	4	PLANNED OBSOLESCENCE	SEE 334725024	N/A	N/A	N/A	N/A
								-	-	-	-						
MX150 ASSY RCP 2X4 SG D/5	334721025	D-STONE GRAY	GCP	PLR		M	RG	-	-	-	4	PLANNED OBSOLESCENCE	SEE 334725025	N/A	N/A	N/A	N/A
								5	6	-	-						
MX150 ASSY RCP 2X4 SG D/7	334721026	D-STONE GRAY	GCP	PLR		M	RG	-	-	-	4	PLANNED OBSOLESCENCE	SEE 334725026	N/A	N/A	N/A	N/A
								-	-	-	-						
MX150 ASSY RCP 2X4 LG B/6	334721027	B-LIGHT GRAY	GCP	PLR		M	RG	-	-	-	-	PLANNED OBSOLESCENCE	SEE 334725027	N/A	N/A	N/A	N/A
								-	-	7	8						
MX150 ASSY RCP 2X4 BK A/2	334721028	A-BLACK	GCP	PLR		M	RG	1	2	3	4	PLANNED OBSOLESCENCE	SEE 334725028	N/A	N/A	N/A	N/A
								-	-	7	8						
MX150 ASSY RCP 2X4 BK A/5	334721029	A-BLACK	GCP	PLR		M	RG	-	-	3	4	PLANNED OBSOLESCENCE	SEE 334725029	N/A	N/A	N/A	N/A
								-	-	-	8						
MX150 ASSY RCP 2X4 BK A/2	334721030	A-BLACK	GCP	PLR		M	RG	1	2	3	4	PLANNED OBSOLESCENCE	SEE 334725030	N/A	N/A	N/A	N/A
								5	-	7	-						
MX150 ASSY RCP 2X4 BK A/7	334721031	A-BLACK	GCP	PLR		M	RG	-	-	-	-	PLANNED OBSOLESCENCE	SEE 334725031	N/A	N/A	N/A	N/A
								5	-	-	-						
MX150 ASSY RCP 2X4 BK A/6	334721032	A-BLACK	GCP	PLR		M	RG	-	2	-	-	PLANNED OBSOLESCENCE	SEE 334725032	N/A	N/A	N/A	N/A
								5	-	-	-						
MX150 ASSY RCP 2X4 LG B/5	334721033	B-LIGHT GRAY	GCP	PLR		M	RG	1	-	3	-	PLANNED OBSOLESCENCE	SEE 334725033	N/A	N/A	N/A	N/A
								-	-	-	8						

molex

MX150 RECEPTACLE 2X4 SEALED ASSEMBLY MAT SEAL
BOM AND PIN OUT SHEET

ASSEMBLY DESCRIPTION	ASSEMBLY PART NUMBER	COMPONENT: THE PRESENCE OF AN ABBREVIATION INDICATES THE PRESENCE OF THAT COMPONENT						BLOCKED TERMINALS: CAVITY WITH A NUMBER INDICATES BLOCKED TERMINAL POSITION; CAVITY WITHOUT A NUMBER INDICATES OPEN TERMINAL POSITION				STATUS	COMMENT	OPTIONAL ATTACHMENTS SOLD SEPARATELY			
		HOUSING KEY/COLOR	GROMMET CAP	PLR	CPA	MAT SEAL	RING SEAL							BACKSHELL WITH RIBS	BACKSHELL WITHOUT RIBS	90° ADAPTOR WITH RIBS	90° ADAPTOR WITHOUT RIBS
MX150 ASSY RCP 2X4 LG B/6	334721034	B-LIGHT GRAY	GCP	PLR		M	RG	-	-	3	-	PLANNED OBSOLESCENCE	SEE 334725034	N/A	N/A	N/A	N/A
								-	-	-	8						
MX150 ASSY RCP 2X4 LG B/7	334721035	B-LIGHT GRAY	GCP	PLR		M	RG	1	-	-	-	PLANNED OBSOLESCENCE	SEE 334725035	N/A	N/A	N/A	N/A
								-	-	-	-						
MX150 ASSY RCP 2X4 BK A/6	334721036	A-BLACK	GCP	PLR		M	RG	1	-	-	-	PLANNED OBSOLESCENCE	SEE 334725036	N/A	N/A	N/A	N/A
								-	-	-	8						
MX150 ASSY RCP 2X4 BK A/6	334721037	A-BLACK	GCP	PLR		M	RG	-	-	-	-	PLANNED OBSOLESCENCE	SEE 334725037	N/A	N/A	N/A	N/A
								-	6	-	8						
MX150 ASSY RCP 2X4 BK A/2	334721038	A-BLACK	GCP	PLR		M	RG	1	-	-	4	PLANNED OBSOLESCENCE	SEE 334725038	N/A	N/A	N/A	N/A
								5	6	7	8						
MX150 ASSY RCP 2X4 BK A/6	334721039	A-BLACK	GCP	PLR		M	RG	-	2	-	-	PLANNED OBSOLESCENCE	SEE 334725039	N/A	N/A	N/A	N/A
								-	-	7	-						
MX150 ASSY RCP 2X4 LG B/6	334721040	B-LIGHT GRAY	GCP	PLR		M	RG	-	-	-	-	PLANNED OBSOLESCENCE	SEE 334725040	N/A	N/A	N/A	N/A
								5	-	7	-						
MX150 ASSY RCP 2X4 BK A/3	334721041	A-BLACK	GCP	PLR		M	RG	-	-	-	4	PLANNED OBSOLESCENCE	SEE 334725041	N/A	N/A	N/A	N/A
								5	6	7	8						
MX150 ASSY RCP 2X4 BK A/6	334721042	A-BLACK	GCP	PLR		M	RG	-	-	-	-	PLANNED OBSOLESCENCE	SEE 334725042	N/A	N/A	N/A	N/A
								5	-	-	8						
MX150 ASSY RCP 2X4 BK A/4	334721043	A-BLACK	GCP	PLR		M	RG	-	2	-	4	PLANNED OBSOLESCENCE	SEE 334725043	N/A	N/A	N/A	N/A
								5	6	-	-						
MX150 ASSY RCP 2X4 BK A/2	334721044	A-BLACK	GCP	PLR		M	RG	1	2	3	4	PLANNED OBSOLESCENCE	SEE 334725044	N/A	N/A	N/A	N/A
								-	6	7	-						
MX150 ASSY RCP 2X4 BK A/6	334721045	A-BLACK	GCP	PLR		M	RG	-	-	-	4	PLANNED OBSOLESCENCE	SEE 334725045	N/A	N/A	N/A	N/A
								-	6	-	-						
MX150 ASSY RCP 2X4 CPA BK A/6	334721046	A-BLACK	GCP	PLR	CPA	M	RG	1	-	-	-	PLANNED OBSOLESCENCE	SEE 334725046	N/A	N/A	N/A	N/A
								-	-	7	-						
MX150 ASSY RCP 2X4 LG B/7	334721047	B-LIGHT GRAY	GCP	PLR		M	RG	-	-	-	-	PLANNED OBSOLESCENCE	SEE 334725047	N/A	N/A	N/A	N/A
								5	-	-	-						
MX150 ASSY RCP 2X4 BK A/3	334721048	A-BLACK	GCP	PLR		M	RG	1	2	-	-	PLANNED OBSOLESCENCE	SEE 334725048	N/A	N/A	N/A	N/A
								5	6	-	8						
MX150 ASSY RCP 2X4 BK A/5	334721049	A-BLACK	GCP	PLR		M	RG	1	2	-	-	PLANNED OBSOLESCENCE	SEE 334725049	N/A	N/A	N/A	N/A
								-	-	-	8						
MX150 ASSY RCP 2X4 BK A/5	334721050	A-BLACK	GCP	PLR		M	RG	-	-	-	4	PLANNED OBSOLESCENCE	SEE 334725050	N/A	N/A	N/A	N/A
								5	6	-	-						
MX150 ASSY RCP 2X4 BK A/4	334721051	A-BLACK	GCP	PLR		M	RG	1	2	3	-	PLANNED OBSOLESCENCE	SEE 334725051	N/A	N/A	N/A	N/A
								-	6	-	-						
MX150 ASSY RCP 2X4 BK A/4	334721052	A-BLACK	GCP	PLR		M	RG	-	-	-	4	PLANNED OBSOLESCENCE	SEE 334725052	N/A	N/A	N/A	N/A
								5	-	7	8						
MX150 ASSY RCP 2X4 BK A/4	334721053	A-BLACK	GCP	PLR		M	RG	-	-	3	4	PLANNED OBSOLESCENCE	SEE 334725053	N/A	N/A	N/A	N/A
								-	-	7	8						
MX150 ASSY RCP 2X4 BK A/3	334721054	A-BLACK	GCP	PLR		M	RG	1	-	3	4	PLANNED OBSOLESCENCE	SEE 334725054	N/A	N/A	N/A	N/A
								-	-	7	8						
MX150 ASSY RCP 2X4 BK A/6	334721055	A-BLACK	GCP	PLR		M	RG	-	-	-	4	PLANNED OBSOLESCENCE	SEE 334725055	N/A	N/A	N/A	N/A
								-	-	-	8						
MX150 ASSY RCP 2X4 BK A/5	334721056	A-BLACK	GCP	PLR		M	RG	-	-	-	4	PLANNED OBSOLESCENCE	SEE 334725056	N/A	N/A	N/A	N/A
								5	-	-	8						
MX150 ASSY RCP 2X4 SG D/0	334721057	D-STONE GRAY	GCP	PLR		M	RG	1	2	3	4	PLANNED OBSOLESCENCE	SEE 334725057	N/A	N/A	N/A	N/A
								5	6	7	8						
MX150 ASSY RCP 2X4 CPA BK A/5	334721058	A-BLACK	GCP	PLR	CPA	M	RG	-	2	-	-	PLANNED OBSOLESCENCE	SEE 334725058	N/A	N/A	N/A	N/A
								5	-	-	8						
MX150 ASSY RCP 2X4 LG B/6	334721059	B-LIGHT GRAY	GCP	PLR		M	RG	-	2	-	-	PLANNED OBSOLESCENCE	SEE 334725059	N/A	N/A	N/A	N/A
								-	-	7	-						
MX150 ASSY RCP 2X4 LG B/7	334721060	B-LIGHT GRAY	GCP	PLR		M	RG	-	2	-	-	PLANNED OBSOLESCENCE	SEE 334725060	N/A	N/A	N/A	N/A
								-	-	-	-						

molex

MX150 RECEPTACLE 2X4 SEALED ASSEMBLY MAT SEAL
BOM AND PIN OUT SHEET

ASSEMBLY DESCRIPTION	ASSEMBLY PART NUMBER	COMPONENT						BLOCKED TERMINALS				STATUS	COMMENT	OPTIONAL ATTACHMENTS SOLD SEPARATELY			
		THE PRESENCE OF AN ABBREVIATION INDICATES THE PRESENCE OF THAT COMPONENT						CAVITY WITH A NUMBER INDICATES BLOCKED TERMINAL POSITION CAVITY WITHOUT A NUMBER INDICATES OPEN TERMINAL POSITION									
		HOUSING KEY/COLOR	GROMMET CAP	PLR	CPA	MAT SEAL	RING SEAL							BACKSHELL WITH RIBS	BACKSHELL WITHOUT RIBS	90^0 ADAPTOR WITH RIBS	90^0 ADAPTOR WITHOUT RIBS
MX150 ASSY RCP 2X4 BK A/2	334721061	A-BLACK	GCP	PLR		M	RG	- -	2 6	3 7	4 8	PLANNED OBSOLESCENCE	SEE 334725061	N/A	N/A	N/A	N/A
MX150 ASSY RCP 2X4 BK A/4	334721062	A-BLACK	GCP	PLR		M	RG	- -	2 6	3 7	- -	PLANNED OBSOLESCENCE	SEE 334725062	N/A	N/A	N/A	N/A
MX150 ASSY RCP 2X4 BK A/8	334724801	A-BLACK	GCO	PLR		M	RR	- -	- -	- -	- -	SALEABLE		N/A	N/A	N/A	N/A
MX150 ASSY RCP 2X4 LG B/8	334724802	B-LIGHT GRAY	GCO	PLR		M	RR	- -	- -	- -	- -	SALEABLE		N/A	N/A	N/A	N/A
MX150 ASSY RCP 2X4 BR C/8	334724803	C-BROWN	GCO	PLR		M	RR	- -	- -	- -	- -	NOT RECOMMENDED	SEE 334724879	N/A	N/A	N/A	N/A
MX150 ASSY RCP 2X4 GR D/8	334724804	D-GREEN	GCO	PLR		M	RR	- -	- -	- -	- -	NOT RECOMMENDED	SEE 334724880	N/A	N/A	N/A	N/A
MX150 ASSY RCP 2X4 BK D/8	334724805	D-BLACK	GCO	PLR		M	RR	- -	- -	- -	- -	SALEABLE		N/A	N/A	N/A	N/A
MX150 ASSY RCP 2X4 CPA BK A/8	334724806	A-BLACK	GCO	PLR	CPA	M	RR	- -	- -	- -	- -	SALEABLE		N/A	N/A	N/A	N/A
MX150 ASSY RCP 2X4 CPA LG B/8	334724807	B-LIGHT GRAY	GCO	PLR	CPA	M	RR	- -	- -	- -	- -	SALEABLE		N/A	N/A	N/A	N/A
MX150 ASSY RCP 2X4 CPA BR C/8	334724808	C-BROWN	GCO	PLR	CPA	M	RR	- -	- -	- -	- -	NOT RECOMMENDED	SEE 334724881	N/A	N/A	N/A	N/A
MX150 ASSY RCP 2X4 CPA GR D/8	334724809	D-GREEN	GCO	PLR	CPA	M	RR	- -	- -	- -	- -	NOT RECOMMENDED	SEE 334724882	N/A	N/A	N/A	N/A
MX150 ASSY RCP 2X4 BK A/7	334724811	A-BLACK	GCP	PLR		M	RR	- -	- -	- -	4 -	SALEABLE		N/A	N/A	N/A	N/A
MX150 ASSY RCP 2X4 LG B/7	334724812	B-LIGHT GRAY	GCP	PLR		M	RR	- -	- -	- -	4 -	SALEABLE		N/A	N/A	N/A	N/A
MX150 ASSY RCP 2X4 BR C/7	334724813	C-BROWN	GCP	PLR		M	RR	- -	- -	- -	4 -	NOT RECOMMENDED		N/A	N/A	N/A	N/A
MX150 ASSY RCP 2X4 GR D/7	334724814	D-GREEN	GCP	PLR		M	RR	- -	- -	- -	4 -	NOT RECOMMENDED	SEE 334725026	N/A	N/A	N/A	N/A
MX150 ASSY RCP 2X4 CPA BK A/7	334724816	A-BLACK	GCP	PLR	CPA	M	RR	- -	- -	- -	4 -	SALEABLE		N/A	N/A	N/A	N/A
MX150 ASSY RCP 2X4 CPA LG B/7	334724817	B-LIGHT GRAY	GCP	PLR	CPA	M	RR	- -	- -	- -	4 -	SALEABLE		N/A	N/A	N/A	N/A
MX150 ASSY RCP 2X4 CPA BR C/7	334724818	C-BROWN	GCP	PLR	CPA	M	RR	- -	- -	- -	4 -	NOT RECOMMENDED		N/A	N/A	N/A	N/A
MX150 ASSY RCP 2X4 CPA GR D/7	334724819	D-GREEN	GCP	PLR	CPA	M	RR	- -	- -	- -	4 -	NOT RECOMMENDED	SEE 334725009	N/A	N/A	N/A	N/A
MX150 ASSY RCP 2X4 BK A/6	334724821	A-BLACK	GCP	PLR		M	RR	- 5	- -	- -	4 -	SALEABLE		N/A	N/A	N/A	N/A
MX150 ASSY RCP 2X4 LG B/6	334724822	B-LIGHT GRAY	GCP	PLR		M	RR	- 5	- -	- -	4 -	SALEABLE		N/A	N/A	N/A	N/A
MX150 ASSY RCP 2X4 BR C/6	334724823	C-BROWN	GCP	PLR		M	RR	- 5	- -	- -	4 -	NOT RECOMMENDED		N/A	N/A	N/A	N/A
MX150 ASSY RCP 2X4 GR D/6	334724824	D-GREEN	GCP	PLR		M	RR	- 5	- -	- -	4 -	NOT RECOMMENDED		N/A	N/A	N/A	N/A
MX150 ASSY RCP 2X4 CPA BK A/6	334724826	A-BLACK	GCP	PLR	CPA	M	RR	- 5	- -	- -	4 -	SALEABLE		N/A	N/A	N/A	N/A
MX150 ASSY RCP 2X4 CPA LG B/6	334724827	B-LIGHT GRAY	GCP	PLR	CPA	M	RR	- 5	- -	- -	4 -	SALEABLE		N/A	N/A	N/A	N/A
MX150 ASSY RCP 2X4 CPA BR C/6	334724828	C-BROWN	GCP	PLR	CPA	M	RR	- 5	- -	- -	4 -	NOT RECOMMENDED		N/A	N/A	N/A	N/A
MX150 ASSY RCP 2X4 CPA GR D/6	334724829	D-GREEN	GCP	PLR	CPA	M	RR	- 5	- -	- -	4 -	NOT RECOMMENDED	SEE 334725010	N/A	N/A	N/A	N/A

MX150 RECEPTACLE 2X4 SEALED ASSEMBLY MAT SEAL
BOM AND PIN OUT SHEET

ASSEMBLY DESCRIPTION	ASSEMBLY PART NUMBER	COMPONENT: THE PRESENCE OF AN ABBREVIATION INDICATES THE PRESENCE OF THAT COMPONENT						BLOCKED TERMINALS: CAVITY WITH A NUMBER INDICATES BLOCKED TERMINAL POSITION; CAVITY WITHOUT A NUMBER INDICATES OPEN TERMINAL POSITION				STATUS	COMMENT	OPTIONAL ATTACHMENTS SOLD SEPARATELY			
		HOUSING KEY/COLOR	GROMMET CAP	PLR	CPA	MAT SEAL	RING SEAL							BACKSHELL WITH RIBS	BACKSHELL WITHOUT RIBS	90° ADAPTOR WITH RIBS	90° ADAPTOR WITHOUT RIBS
MX150 ASSY RCP 2X4 BK A/5	334724831	A-BLACK	GCP	PLR		M	RR	1	-	-	4	SALEABLE		N/A	N/A	N/A	N/A
								5	-	-	-						
MX150 ASSY RCP 2X4 LG B/5	334724832	B-LIGHT GRAY	GCP	PLR		M	RR	1	-	-	4	SALEABLE		N/A	N/A	N/A	N/A
								5	-	-	-						
MX150 ASSY RCP 2X4 BR C/5	334724833	C-BROWN	GCP	PLR		M	RR	1	-	-	4	NOT RECOMMENDED		N/A	N/A	N/A	N/A
								5	-	-	-						
MX150 ASSY RCP 2X4 GR D/5	334724834	D-GREEN	GCP	PLR		M	RR	1	-	-	4	NOT RECOMMENDED		N/A	N/A	N/A	N/A
								5	-	-	-						
MX150 ASSY RCP 2X4 CPA BK A/5	334724836	A-BLACK	GCP	PLR	CPA	M	RR	1	-	-	4	SALEABLE		N/A	N/A	N/A	N/A
								5	-	-	-						
MX150 ASSY RCP 2X4 CPA LG B/5	334724837	B-LIGHT GRAY	GCP	PLR	CPA	M	RR	1	-	-	4	SALEABLE		N/A	N/A	N/A	N/A
								5	-	-	-						
MX150 ASSY RCP 2X4 CPA BR C/5	334724838	C-BROWN	GCP	PLR	CPA	M	RR	1	-	-	4	NOT RECOMMENDED		N/A	N/A	N/A	N/A
								5	-	-	-						
MX150 ASSY RCP 2X4 CPA GR D/5	334724839	D-GREEN	GCP	PLR	CPA	M	RR	1	-	-	4	NOT RECOMMENDED		N/A	N/A	N/A	N/A
								5	-	-	-						
MX150 ASSY RCP 2X4 BK A/4	334724841	A-BLACK	GCP	PLR		M	RR	1	-	-	4	SALEABLE		N/A	N/A	N/A	N/A
								5	-	-	8						
MX150 ASSY RCP 2X4 LG B/4	334724842	B-LIGHT GRAY	GCP	PLR		M	RR	1	-	-	4	SALEABLE		N/A	N/A	N/A	N/A
								5	-	-	8						
MX150 ASSY RCP 2X4 BR C/4	334724843	C-BROWN	GCP	PLR		M	RR	1	-	-	4	NOT RECOMMENDED		N/A	N/A	N/A	N/A
								5	-	-	8						
MX150 ASSY RCP 2X4 GR D/4	334724844	D-GREEN	GCP	PLR		M	RR	1	-	-	4	NOT RECOMMENDED		N/A	N/A	N/A	N/A
								5	-	-	8						
MX150 ASSY RCP 2X4 CPA BK A/4	334724846	A-BLACK	GCP	PLR	CPA	M	RR	1	-	-	4	SALEABLE		N/A	N/A	N/A	N/A
								5	-	-	8						
MX150 ASSY RCP 2X4 CPA LG B/4	334724847	B-LIGHT GRAY	GCP	PLR	CPA	M	RR	1	-	-	4	SALEABLE		N/A	N/A	N/A	N/A
								5	-	-	8						
MX150 ASSY RCP 2X4 CPA BR C/4	334724848	C-BROWN	GCP	PLR	CPA	M	RR	1	-	-	4	NOT RECOMMENDED		N/A	N/A	N/A	N/A
								5	-	-	8						
MX150 ASSY RCP 2X4 CPA GR D/4	334724849	D-GREEN	GCP	PLR	CPA	M	RR	1	-	-	4	NOT RECOMMENDED		N/A	N/A	N/A	N/A
								5	-	-	8						
MX150 ASSY RCP 2X4 BK A/0	334724851	A-BLACK	GCP	PLR		M	RR	1	2	3	4	SALEABLE		N/A	N/A	N/A	N/A
								5	6	7	8						
MX150 ASSY RCP 2X4 LG B/0	334724852	B-LIGHT GRAY	GCP	PLR		M	RR	1	2	3	4	SALEABLE		N/A	N/A	N/A	N/A
								5	6	7	8						
MX150 ASSY RCP 2X4 BR C/0	334724853	C-BROWN	GCP	PLR		M	RR	1	2	3	4	NOT RECOMMENDED		N/A	N/A	N/A	N/A
								5	6	7	8						
MX150 ASSY RCP 2X4 GR D/0	334724854	D-GREEN	GCP	PLR		M	RR	1	2	3	4	NOT RECOMMENDED	SEE 334725057	N/A	N/A	N/A	N/A
								5	6	7	8						
MX150 ASSY RCP 2X4 BK D/0	334724855	D-BLACK	GCP	PLR		M	RR	1	2	3	4	SALEABLE		N/A	N/A	N/A	N/A
								5	6	7	8						
MX150 ASSY RCP 2X4 CPA BK A/5	334724856	A-BLACK	GCP	PLR	CPA	M	RR	-	2	-	-	SALEABLE		N/A	N/A	N/A	N/A
								-	6	7	-						
MX150 ASSY RCP 2X4 CPA BK A/3	334724857	A-BLACK	GCP	PLR	CPA	M	RR	1	2	-	-	SALEABLE		N/A	N/A	N/A	N/A
								5	6	7	-						
MX150 ASSY RCP 2X4 CPA BK A/2	334724858	A-BLACK	GCP	PLR	CPA	M	RR	1	2	3	-	SALEABLE		N/A	N/A	N/A	N/A
								5	6	7	-						
MX150 ASSY RCP 2X4 BK A/2	334724859	A-BLACK	GCP	PLR		M	RR	1	2	3	-	SALEABLE		N/A	N/A	N/A	N/A
								-	6	7	8						
MX150 ASSY RCP 2X4 BK D/7	334724860	D-BLACK	GCP	PLR		M	RR	-	-	-	4	SALEABLE		N/A	N/A	N/A	N/A
								-	-	-	-						
MX150 ASSY RCP 2X4 BK A/7	334724861	A-BLACK	GCP	PLR		M	RR	-	-	-	-	SALEABLE		N/A	N/A	N/A	N/A
								-	-	-	8						

molex

MX150 RECEPTACLE 2X4 SEALED ASSEMBLY MAT SEAL
BOM AND PIN OUT SHEET

ASSEMBLY DESCRIPTION	ASSEMBLY PART NUMBER	COMPONENT: THE PRESENCE OF AN ABBREVIATION INDICATES THE PRESENCE OF THAT COMPONENT						BLOCKED TERMINALS: CAVITY WITH A NUMBER INDICATES BLOCKED TERMINAL POSITION; CAVITY WITHOUT A NUMBER INDICATES OPEN TERMINAL POSITION				STATUS	COMMENT	OPTIONAL ATTACHMENTS SOLD SEPARATELY			
		HOUSING KEY/COLOR	GROMMET CAP	PLR	CPA	MAT SEAL	RING SEAL							BACKSHELL WITH RIBS	BACKSHELL WITHOUT RIBS	90^0 ADAPTOR WITH RIBS	90^0 ADAPTOR WITHOUT RIBS
MX150 ASSY RCP 2X4 BK A/7	334724862	A-BLACK	GCP	PLR		M	RR	1	-	-	-	SALEABLE		N/A	N/A	N/A	N/A
								-	-	-	-						
MX150 ASSY RCP 2X4 BK A/4	334724863	A-BLACK	GCP	PLR		M	RR	-	2	3	-	SALEABLE		N/A	N/A	N/A	N/A
								5	-	-	8						
MX150 ASSY RCP 2X4 BK A/5	334724864	A-BLACK	GCP	PLR		M	RR	1	-	3	-	SALEABLE		N/A	N/A	N/A	N/A
								5	-	-	-						
MX150 ASSY RCP 2X4 BK A/6	334724865	A-BLACK	GCP	PLR		M	RR	1	-	-	-	SALEABLE		N/A	N/A	N/A	N/A
								-	6	-	-						
MX150 ASSY RCP 2X4 BK A/3	334724866	A-BLACK	GCP	PLR		M	RR	-	2	3	-	SALEABLE		N/A	N/A	N/A	N/A
								5	6	-	8						
MX150 ASSY RCP 2X4 BK A/4	334724867	A-BLACK	GCP	PLR		M	RR	1	-	3	-	SALEABLE		N/A	N/A	N/A	N/A
								5	6	-	-						
MX150 ASSY RCP 2X4 BK A/5	334724868	A-BLACK	GCP	PLR		M	RR	-	-	-	-	SALEABLE		N/A	N/A	N/A	N/A
								5	6	-	8						
MX150 ASSY RCP 2X4 BK A/7	334724869	A-BLACK	GCP	PLR		M	RR	-	-	-	-	SALEABLE		N/A	N/A	N/A	N/A
								-	6	-	-						
MX150 ASSY RCP 2X4 BK A/2	334724870	A-BLACK	GCP	PLR		M	RR	1	-	3	-	SALEABLE		N/A	N/A	N/A	N/A
								5	6	7	8						
MX150 ASSY RCP 2X4 BK A/2	334724871	A-BLACK	GCP	PLR		M	RR	-	2	3	4	SALEABLE		N/A	N/A	N/A	N/A
								5	6	7	-						
MX150 ASSY RCP 2X4 BK A/6	334724872	A-BLACK	GCP	PLR		M	RR	-	-	-	-	SALEABLE		N/A	N/A	N/A	N/A
								-	-	7	8						
MX150 ASSY RCP 2X4 BK A/3	334724873	A-BLACK	GCP	PLR		M	RR	-	2	3	-	SALEABLE		N/A	N/A	N/A	N/A
								-	6	7	8						
MX150 ASSY RCP 2X4 BK A/6	334724874	A-BLACK	GCP	PLR		M	RR	-	2	3	-	SALEABLE		N/A	N/A	N/A	N/A
								-	-	-	-						
MX150 ASSY RCP 2X4 BK A/6	334724875	A-BLACK	GCP	PLR		M	RR	1	-	-	4	SALEABLE		N/A	N/A	N/A	N/A
								-	-	-	-						
MX150 ASSY RCP 2X4 BK A/2	334724876	A-BLACK	GCP	PLR		M	RR	-	2	3	-	SALEABLE		N/A	N/A	N/A	N/A
								5	6	7	8						
MX150 ASSY RCP 2X4 CPA BK A/7	334724877	A-BLACK	GCP	PLR	CPA	M	RR	-	-	-	-	SALEABLE		N/A	N/A	N/A	N/A
								-	-	-	8						
MX150 ASSY RCP 2X4 BK A/5	334724878	A-BLACK	GCP	PLR		M	RR	-	-	3	-	SALEABLE		N/A	N/A	N/A	N/A
								5	6	-	-						
MX150 ASSY RCP 2X4 DG C/8	334724879	C-DARK GRAY	GCO	PLR		M	RR	-	-	-	-	SALEABLE		N/A	N/A	N/A	N/A
								-	-	-	-						
MX150 ASSY RCP 2X4 SG D/8	334724880	D-STONE GRAY	GCO	PLR		M	RR	-	-	-	-	SALEABLE		N/A	N/A	N/A	N/A
								-	-	-	-						
MX150 ASSY RCP 2X4 CPA DG C/8	334724881	C-DARK GRAY	GCO	PLR	CPA	M	RR	-	-	-	-	SALEABLE		N/A	N/A	N/A	N/A
								-	-	-	-						
MX150 ASSY RCP 2X4 CPA SG D/8	334724882	D-STONE GRAY	GCO	PLR	CPA	M	RR	-	-	-	-	SALEABLE		N/A	N/A	N/A	N/A
								-	-	-	-						
MX150 ASSY RCP 2X4 BK A/2	334724883	A-BLACK	GCP	PLR		M	RR	-	2	3	4	SALEABLE		N/A	N/A	N/A	N/A
								5	-	7	8						
MX150 ASSY RCP 2X4 BK A/5	334724884	A-BLACK	GCP	PLR		M	RR	-	-	3	-	SALEABLE		N/A	N/A	N/A	N/A
								-	6	7	-						
MX150 ASSY RCP 2X4 BK A/2	334724885	A-BLACK	GCP	PLR		M	RR	-	2	3	4	SALEABLE		N/A	N/A	N/A	N/A
								5	6	-	8						
MX150 ASSY RCP 2X4 BK A/5	334724886	A-BLACK	GCP	PLR		M	RR	-	-	3	-	SALEABLE		N/A	N/A	N/A	N/A
								-	6	-	8						
MX150 ASSY RCP 2X4 CPA LG B/7	334724887	B-LIGHT GRAY	GCP	PLR	CPA	M	RR	-	-	-	-	SALEABLE		N/A	N/A	N/A	N/A
								-	-	-	8						
MX150 ASSY RCP 2X4 LG B/6	334724888	B-LIGHT GRAY	GCP	PLR		M	RR	1	-	-	-	SALEABLE		N/A	N/A	N/A	N/A
								-	6	-	-						

molex

MX150 RECEPTACLE 2X4 SEALED ASSEMBLY MAT SEAL
BOM AND PIN OUT SHEET

ASSEMBLY DESCRIPTION	ASSEMBLY PART NUMBER	COMPONENT THE PRESENCE OF AN ABBREVIATION INDICATES THE PRESENCE OF THAT COMPONENT						BLOCKED TERMINALS CAVITY WITH A NUMBER INDICATES BLOCKED TERMINAL POSITION CAVITY WITHOUT A NUMBER INDICATES OPEN TERMINAL POSITION				STATUS	COMMENT	OPTIONAL ATTACHMENTS SOLD SEPARATELY			
		HOUSING KEY/COLOR	GROMMET CAP	PLR	CPA	MAT SEAL	RING SEAL							BACKSHELL WITH RIBS	BACKSHELL WITHOUT RIBS	90^0 ADAPTOR WITH RIBS	90^0 ADAPTOR WITHOUT RIBS
MX150 ASSY RCP 2X4 BK A/6	334724889	A-BLACK	GCP	PLR		M	RR	1	-	-	-	SALEABLE		N/A	N/A	N/A	N/A
								5	-	-	-						
MX150 ASSY RCP 2X4 CPA YW A/6	334724890	A-YELLOW	GCP	PLR	CPA	M	RR	-	2	3	-	SALEABLE		N/A	N/A	N/A	N/A
								-	-	-	-						
MX150 ASSY RCP 2X4 CPA YW A/8	334724891	A-YELLOW	GCO	PLR	CPA	M	RR	-	-	-	-	SALEABLE		N/A	N/A	N/A	N/A
								-	-	-	-						
MX150 ASSY RCP 2X4 YW A/8	334724892	A-YELLOW	GCO	PLR		M	RR	-	-	-	-	SALEABLE		N/A	N/A	N/A	N/A
								-	-	-	-						
MX150 ASSY RCP 2X4 CPA BK A/7	334724893	A-BLACK	GCP	PLR	CPA	M	RR	-	-	-	-	SALEABLE		N/A	N/A	N/A	N/A
								-	6	-	-						
MX150 ASSY RCP 2X4 CPA BK A/2	334724894	A-BLACK	GCP	PLR	CPA	M	RR	1	2	3	-	SALEABLE		N/A	N/A	N/A	N/A
								-	6	7	8						
MX150 ASSY RCP 2X4 BK A/6	334724895	A-BLACK	GCP	PLR		M	RR	1	2	-	-	SALEABLE		N/A	N/A	N/A	N/A
								-	-	-	-						
MX150 ASSY RCP 2X4 CS BK A/8	334724901	A-BLACK-CLIP	GCO	PLR		M	RR	-	-	-	-	SALEABLE		34951-0811	34951-0821	34951-0831	34951-0841
								-	-	-	-						
MX150 ASSY RCP 2X4 CS LG B/8	334724902	B-LIGHT GRAY-CLIP	GCO	PLR		M	RR	-	-	-	-	SALEABLE		34951-0811	34951-0821	34951-0831	34951-0841
								-	-	-	-						
MX150 ASSY RCP 2X4 CS BR C/8	334724903	C-BROWN-CLIP	GCO	PLR		M	RR	-	-	-	-	NOT RECOMMENDED	SEE 334724922	34951-0811	34951-0821	34951-0831	34951-0841
								-	-	-	-						
MX150 ASSY RCP 2X4 CS GR D/8	334724904	D-GREEN-CLIP	GCO	PLR		M	RR	-	-	-	-	NOT RECOMMENDED	SEE 334724923	34951-0811	34951-0821	34951-0831	34951-0841
								-	-	-	-						
MX150 ASSY RCP 2X4 CS BK D/8	334724905	D-BLACK-CLIP	GCO	PLR		M	RR	-	-	-	-	SALEABLE		34951-0811	34951-0821	34951-0831	34951-0841
								-	-	-	-						
MX150 ASSY RCP 2X4 CS CPA BK A/8	334724906	A-BLACK-CLIP	GCO	PLR	CPA	M	RR	-	-	-	-	SALEABLE		34951-0811	34951-0821	34951-0831	34951-0841
								-	-	-	-						
MX150 ASSY RCP 2X4 CS CPA LG B/8	334724907	B-LIGHT GRAY-CLIP	GCO	PLR	CPA	M	RR	-	-	-	-	SALEABLE		34951-0811	34951-0821	34951-0831	34951-0841
								-	-	-	-						
MX150 ASSY RCP 2X4 CS CPA BR C/8	334724908	C-BROWN-CLIP	GCO	PLR	CPA	M	RR	-	-	-	-	NOT RECOMMENDED	SEE 334724924	34951-0811	34951-0821	34951-0831	34951-0841
								-	-	-	-						
MX150 ASSY RCP 2X4 CS CPA GR D/8	334724909	D-GREEN-CLIP	GCO	PLR	CPA	M	RR	-	-	-	-	NOT RECOMMENDED	SEE 334724925	34951-0811	34951-0821	34951-0831	34951-0841
								-	-	-	-						
MX150 ASSY RCP 2X4 CS BK A/7	334724910	A-BLACK-CLIP	GCP	PLR		M	RR	-	-	-	4	SALEABLE		34951-0811	34951-0821	34951-0831	34951-0841
								-	-	-	-						
MX150 ASSY RCP 2X4 CS BK A/6	334724920	A-BLACK-CLIP	GCP	PLR		M	RR	-	-	-	4	SALEABLE		34951-0811	34951-0821	34951-0831	34951-0841
								-	-	-	8						
MX150 ASSY RCP 2X4 CS BK A/7	334724921	A-BLACK-CLIP	GCP	PLR		M	RR	-	-	-	-	SALEABLE		34951-0811	34951-0821	34951-0831	34951-0841
								-	-	-	8						
MX150 ASSY RCP 2X4 CS DG C/8	334724922	C-DARK GRAY-CLIP	GCO	PLR		M	RR	-	-	-	-	SALEABLE		34951-0811	34951-0821	34951-0831	34951-0841
								-	-	-	-						
MX150 ASSY RCP 2X4 CS SG D/8	334724923	D-STONE GRAY-CLIP	GCO	PLR		M	RR	-	-	-	-	SALEABLE		34951-0811	34951-0821	34951-0831	34951-0841
								-	-	-	-						
MX150 ASSY RCP 2X4 CS CPA DG C/8	334724924	C-DARK GRAY-CLIP	GCO	PLR	CPA	M	RR	-	-	-	-	SALEABLE		34951-0811	34951-0821	34951-0831	34951-0841
								-	-	-	-						
MX150 ASSY RCP 2X4 CS CPA SG D/8	334724925	D-STONE GRAY-CLIP	GCO	PLR	CPA	M	RR	-	-	-	-	SALEABLE		34951-0811	34951-0821	34951-0831	34951-0841
								-	-	-	-						
MX150 ASSY RCP 2X4 CS LG B/6	334724926	B-LIGHT GRAY-CLIP	GCP	PLR		M	RR	-	-	-	4	SALEABLE		34951-0811	34951-0821	34951-0831	34951-0841
								-	-	-	8						
MX150 ASSY RCP 2X4 CS CPA BK A/6	334724927	A-BLACK-CLIP	GCP	PLR	CPA	M	RR	-	-	-	4	SALEABLE		34951-0811	34951-0821	34951-0831	34951-0841
								-	-	-	8						
MX150 ASSY RCP 2X4 CS CPA LG B/6	334724928	B-LIGHT GRAY-CLIP	GCP	PLR	CPA	M	RR	-	-	-	4	SALEABLE		34951-0811	34951-0821	34951-0831	34951-0841
								-	-	-	8						
MX150 ASSY RCP 2X4 CS BK A/4	334724929	A-BLACK-CLIP	GCP	PLR		M	RR	-	-	-	4	SALEABLE		34951-0811	34951-0821	34951-0831	34951-0841
								5	-	7	8						

molex

MX150 RECEPTACLE 2X4 SEALED ASSEMBLY MAT SEAL
BOM AND PIN OUT SHEET

ASSEMBLY DESCRIPTION	ASSEMBLY PART NUMBER	COMPONENT						BLOCKED TERMINALS				STATUS	COMMENT	OPTIONAL ATTACHMENTS SOLD SEPARATELY			
		THE PRESENCE OF AN ABBREVIATION INDICATES THE PRESENCE OF THAT COMPONENT						CAVITY WITH A NUMBER INDICATES BLOCKED TERMINAL POSITION CAVITY WITHOUT A NUMBER INDICATES OPEN TERMINAL POSITION									
		HOUSING KEY/COLOR	GROMMET CAP	PLR	CPA	MAT SEAL	RING SEAL							BACKSHELL WITH RIBS	BACKSHELL WITHOUT RIBS	90° ADAPTOR WITH RIBS	90° ADAPTOR WITHOUT RIBS
MX150 ASSY RCP 2X4 CS BK A/2	334724930	A-BLACK-CLIP	GCP	PLR		M	RR	-	2	3	4	SALEABLE		34951-0811	34951-0821	34951-0831	34951-0841
								5	-	7	8						
MX150 ASSY RCP 2X4 CS BK A/4	334724931	A-BLACK-CLIP	GCP	PLR		M	RR	1	2	3	-	SALEABLE		34951-0811	34951-0821	34951-0831	34951-0841
								-	6	-	-						
MX150 ASSY RCP 2X4 CS BK A/6	334724932	A-BLACK-CLIP	GCP	PLR		M	RR	1	-	-	-	SALEABLE		34951-0811	34951-0821	34951-0831	34951-0841
								-	6	-	-						
MX150 ASSY RCP 2X4 CS CPA BK A/7	334724933	A-BLACK-CLIP	GCP	PLR	CPA	M	RR	-	-	-	-	SALEABLE		34951-0811	34951-0821	34951-0831	34951-0841
								-	-	-	8						
MX150 ASSY RCP 2X4 CS CPA LG B/7	334724934	B-LIGHT GRAY-CLIP	GCP	PLR	CPA	M	RR	-	-	-	-	SALEABLE		34951-0811	34951-0821	34951-0831	34951-0841
								-	-	-	8						
MX150 ASSY RCP 2X4 CS CPA BK A/2	334724935	A-BLACK-CLIP	GCP	PLR	CPA	M	RR	-	2	3	4	SALEABLE		34951-0811	34951-0821	34951-0831	34951-0841
								-	6	7	8						
MX150 ASSY RCP 2X4 CS BK A/5	334724936	A-BLACK-CLIP	GCP	PLR		M	RR	-	-	-	-	SALEABLE		34951-0811	34951-0821	34951-0831	34951-0841
								-	6	7	8						
MX150 ASSY RCP 2X4 CS BK A/6	334724937	A-BLACK-CLIP	GCP	PLR		M	RR	-	-	-	-	SALEABLE		34951-0811	34951-0821	34951-0831	34951-0841
								5	-	-	8						
MX150 ASSY RCP 2X4 CS BK A/7	334724938	A-BLACK-CLIP	GCP	PLR		M	RR	-	-	-	-	SALEABLE		34951-0811	34951-0821	34951-0831	34951-0841
								5	-	-	-						
MX150 ASSY RCP 2X4 CS BK A/3	334724939	A-BLACK-CLIP	GCP	PLR		M	RR	-	-	-	4	SALEABLE		34951-0811	34951-0821	34951-0831	34951-0841
								5	6	7	8						
MX150 ASSY RCP 2X4 CS BK A/4	334724940	A-BLACK-CLIP	GCP	PLR		M	RR	1	2	-	-	SALEABLE		34951-0811	34951-0821	34951-0831	34951-0841
								5	6	-	-						
MX150 ASSY RCP 2X4 CS BK A/2	334724941	A-BLACK-CLIP	GCP	PLR		M	RR	1	2	3	4	SALEABLE		34951-0811	34951-0821	34951-0831	34951-0841
								5	6	-	-						
MX150 ASSY RCP 2X4 CS BK A/5	334724942	A-BLACK-CLIP	GCP	PLR		M	RR	-	-	-	4	SALEABLE		34951-0811	34951-0821	34951-0831	34951-0841
								5	6	-	-						
MX150 ASSY RCP 2X4 CS BK A/4	334724943	A-BLACK-CLIP	GCP	PLR		M	RR	-	2	3	-	SALEABLE		34951-0811	34951-0821	34951-0831	34951-0841
								-	6	7	-						
MX150 ASSY RCP 2X4 CS BK A/5	334724944	A-BLACK-CLIP	GCP	PLR		M	RR	-	-	-	4	SALEABLE		34951-0811	34951-0821	34951-0831	34951-0841
								5	-	7	-						
MX150 ASSY RCP 2X4 CS BK A/7	334724945	A-BLACK-CLIP	GCP	PLR		M	RR	-	-	-	-	SALEABLE		34951-0811	34951-0821	34951-0831	34951-0841
								-	-	7	-						
MX150 ASSY RCP 2X4 CS BK A/6	334724946	A-BLACK-CLIP	GCP	PLR		M	RR	-	-	3	-	SALEABLE		34951-0811	34951-0821	34951-0831	34951-0841
								-	-	7	-						
MX150 ASSY RCP 2X4 CS BK A/1	334724947	A-BLACK-CLIP	GCP	PLR		M	RR	1	-	3	4	SALEABLE		34951-0811	34951-0821	34951-0831	34951-0841
								5	6	7	8						
MX150 ASSY RCP 2X4 BK A/4	334725001	A-BLACK	GCP	PLR		M	RR	1	2	3	4	SALEABLE		N/A	N/A	N/A	N/A
								-	-	-	-						
MX150 ASSY RCP 2X4 LG B/7	334725002	B-LIGHT GRAY	GCP	PLR		M	RR	-	-	-	-	SALEABLE		N/A	N/A	N/A	N/A
								-	6	-	-						
MX150 ASSY RCP 2X4 BK A/2	334725006	A-BLACK	GCP	PLR		M	RR	1	2	3	4	SALEABLE		N/A	N/A	N/A	N/A
								5	6	-	-						
MX150 ASSY RCP 2X4 CPA BK A/6	334725007	A-BLACK	GCP	PLR	CPA	M	RR	-	-	-	-	SALEABLE		N/A	N/A	N/A	N/A
								-	6	7	-						
MX150 ASSY RCP 2X4 CPA BK A/7	334725008	A-BLACK	GCP	PLR	CPA	M	RR	-	-	-	-	SALEABLE		N/A	N/A	N/A	N/A
								-	-	7	-						
MX150 ASSY RCP 2X4 CPA SG D/7	334725009	D-STONE GRAY	GCP	PLR	CPA	M	RR	-	-	-	4	SALEABLE		N/A	N/A	N/A	N/A
								-	-	-	-						
MX150 ASSY RCP 2X4 CPA SG D/6	334725010	D-STONE GRAY	GCP	PLR	CPA	M	RR	-	-	-	4	SALEABLE		N/A	N/A	N/A	N/A
								5	-	-	-						
MX150 ASSY RCP 2X4 CPA SG D/5	334725011	D-STONE GRAY	GCP	PLR	CPA	M	RR	-	-	-	4	SALEABLE		N/A	N/A	N/A	N/A
								5	6	-	-						
MX150 ASSY RCP 2X4 BK A/5	334725012	A-BLACK	GCP	PLR		M	RR	-	-	-	4	SALEABLE		N/A	N/A	N/A	N/A
								-	-	7	8						

molex

MX150 RECEPTACLE 2X4 SEALED ASSEMBLY MAT SEAL
BOM AND PIN OUT SHEET

ASSEMBLY DESCRIPTION	ASSEMBLY PART NUMBER	COMPONENT						BLOCKED TERMINALS				STATUS	COMMENT	OPTIONAL ATTACHMENTS SOLD SEPARATELY			
		THE PRESENCE OF AN ABBREVIATION INDICATES THE PRESENCE OF THAT COMPONENT						CAVITY WITH A NUMBER INDICATES BLOCKED TERMINAL POSITION CAVITY WITHOUT A NUMBER INDICATES OPEN TERMINAL POSITION									
		HOUSING KEY/COLOR	GROMMET CAP	PLR	CPA	MAT SEAL	RING SEAL							BACKSHELL WITH RIBS	BACKSHELL WITHOUT RIBS	90° ADAPTOR WITH RIBS	90° ADAPTOR WITHOUT RIBS
MX150 ASSY RCP 2X4 CPA BK A/2	334725013	A-BLACK	GCP	PLR	CPA	M	RR	-	-	3	4	SALEABLE		N/A	N/A	N/A	N/A
								5	6	7	8						
MX150 ASSY RCP 2X4 BK A/2	334725014	A-BLACK	GCP	PLR		M	RR	-	-	3	4	SALEABLE		N/A	N/A	N/A	N/A
								5	6	7	8						
MX150 ASSY RCP 2X4 CPA BK A/5	334725015	A-BLACK	GCP	PLR	CPA	M	RR	-	-	-	4	SALEABLE		N/A	N/A	N/A	N/A
								-	-	7	8						
MX150 ASSY RCP 2X4 BK A/5	334725016	A-BLACK	GCP	PLR		M	RR	-	-	-	-	SALEABLE		N/A	N/A	N/A	N/A
								-	6	7	8						
MX150 ASSY RCP 2X4 BK A/4	334725017	A-BLACK	GCP	PLR		M	RR	1	-	3	4	SALEABLE		N/A	N/A	N/A	N/A
								-	-	-	8						
MX150 ASSY RCP 2X4 CPA BK A/4	334725018	A-BLACK	GCP	PLR	CPA	M	RR	-	-	-	-	SALEABLE		N/A	N/A	N/A	N/A
								5	6	7	8						
MX150 ASSY RCP 2X4 CPA BK A/6	334725019	A-BLACK	GCP	PLR	CPA	M	RR	-	-	-	-	SALEABLE		N/A	N/A	N/A	N/A
								-	-	7	8						
MX150 ASSY RCP 2X4 CPA BK A/2	334725020	A-BLACK	GCP	PLR	CPA	M	RR	-	2	3	4	SALEABLE		N/A	N/A	N/A	N/A
								-	6	7	8						
MX150 ASSY RCP 2X4 CPA BK A/0	334725021	A-BLACK	GCP	PLR	CPA	M	RR	1	2	3	4	SALEABLE		N/A	N/A	N/A	N/A
								5	6	7	8						
MX150 ASSY RCP 2X4 CPA BK A/6	334725022	A-BLACK	GCP	PLR	CPA	M	RR	1	-	-	-	SALEABLE		N/A	N/A	N/A	N/A
								5	-	-	-						
MX150 ASSY RCP 2X4 BK A/4	334725023	A-BLACK	GCP	PLR		M	RR	-	-	-	-	SALEABLE		N/A	N/A	N/A	N/A
								5	6	7	8						
MX150 ASSY RCP 2X4 BK A/6	334725024	A-BLACK	GCP	PLR		M	RR	-	-	3	4	SALEABLE		N/A	N/A	N/A	N/A
								-	-	-	-						
MX150 ASSY RCP 2X4 SG D/5	334725025	D-STONE GRAY	GCP	PLR		M	RR	-	-	-	4	SALEABLE		N/A	N/A	N/A	N/A
								5	6	-	-						
MX150 ASSY RCP 2X4 SG D/7	334725026	D-STONE GRAY	GCP	PLR		M	RR	-	-	-	4	SALEABLE		N/A	N/A	N/A	N/A
								-	-	-	-						
MX150 ASSY RCP 2X4 LG B/6	334725027	B-LIGHT GRAY	GCP	PLR		M	RR	-	-	-	-	SALEABLE		N/A	N/A	N/A	N/A
								-	-	7	8						
MX150 ASSY RCP 2X4 BK A/2	334725028	A-BLACK	GCP	PLR		M	RR	1	2	3	4	SALEABLE		N/A	N/A	N/A	N/A
								-	-	7	8						
MX150 ASSY RCP 2X4 BK A/5	334725029	A-BLACK	GCP	PLR		M	RR	-	-	3	4	SALEABLE		N/A	N/A	N/A	N/A
								-	-	-	8						
MX150 ASSY RCP 2X4 BK A/2	334725030	A-BLACK	GCP	PLR		M	RR	1	2	3	4	SALEABLE		N/A	N/A	N/A	N/A
								5	-	7	-						
MX150 ASSY RCP 2X4 BK A/7	334725031	A-BLACK	GCP	PLR		M	RR	-	-	-	-	SALEABLE		N/A	N/A	N/A	N/A
								5	-	-	-						
MX150 ASSY RCP 2X4 BK A/6	334725032	A-BLACK	GCP	PLR		M	RR	-	2	-	-	SALEABLE		N/A	N/A	N/A	N/A
								5	-	-	-						
MX150 ASSY RCP 2X4 LG B/5	334725033	B-LIGHT GRAY	GCP	PLR		M	RR	1	-	3	-	SALEABLE		N/A	N/A	N/A	N/A
								-	-	-	8						
MX150 ASSY RCP 2X4 LG B/6	334725034	B-LIGHT GRAY	GCP	PLR		M	RR	-	-	3	-	SALEABLE		N/A	N/A	N/A	N/A
								-	-	-	8						
MX150 ASSY RCP 2X4 LG B/7	334725035	B-LIGHT GRAY	GCP	PLR		M	RR	1	-	-	-	SALEABLE		N/A	N/A	N/A	N/A
								-	-	-	-						
MX150 ASSY RCP 2X4 BK A/6	334725036	A-BLACK	GCP	PLR		M	RR	1	-	-	-	SALEABLE		N/A	N/A	N/A	N/A
								-	-	-	8						
MX150 ASSY RCP 2X4 BK A/6	334725037	A-BLACK	GCP	PLR		M	RR	-	-	-	-	SALEABLE		N/A	N/A	N/A	N/A
								-	6	-	8						
MX150 ASSY RCP 2X4 BK A/2	334725038	A-BLACK	GCP	PLR		M	RR	1	-	-	4	SALEABLE		N/A	N/A	N/A	N/A
								5	6	7	8						
MX150 ASSY RCP 2X4 BK A/6	334725039	A-BLACK	GCP	PLR		M	RR	-	2	-	-	SALEABLE		N/A	N/A	N/A	N/A
								-	-	7	-						

molex

MX150 RECEPTACLE 2X4 SEALED ASSEMBLY MAT SEAL
BOM AND PIN OUT SHEET

ASSEMBLY DESCRIPTION	ASSEMBLY PART NUMBER	COMPONENT: THE PRESENCE OF AN ABBREVIATION INDICATES THE PRESENCE OF THAT COMPONENT						BLOCKED TERMINALS: CAVITY WITH A NUMBER INDICATES BLOCKED TERMINAL POSITION; CAVITY WITHOUT A NUMBER INDICATES OPEN TERMINAL POSITION				STATUS	COMMENT	OPTIONAL ATTACHMENTS SOLD SEPARATELY			
		HOUSING KEY/COLOR	GROMMET CAP	PLR	CPA	MAT SEAL	RING SEAL							BACKSHELL WITH RIBS	BACKSHELL WITHOUT RIBS	90^0 ADAPTOR WITH RIBS	90^0 ADAPTOR WITHOUT RIBS
MX150 ASSY RCP 2X4 LG B/6	334725040	B-LIGHT GRAY	GCP	PLR		M	RR	-	-	-	-	SALEABLE		N/A	N/A	N/A	N/A
								5	-	7	-						
MX150 ASSY RCP 2X4 BK A/3	334725041	A-BLACK	GCP	PLR		M	RR	-	-	-	4	SALEABLE		N/A	N/A	N/A	N/A
								5	6	7	8						
MX150 ASSY RCP 2X4 BK A/6	334725042	A-BLACK	GCP	PLR		M	RR	-	-	-	-	SALEABLE		N/A	N/A	N/A	N/A
								5	-	-	8						
MX150 ASSY RCP 2X4 BK A/4	334725043	A-BLACK	GCP	PLR		M	RR	-	2	-	4	SALEABLE		N/A	N/A	N/A	N/A
								5	6	-	-						
MX150 ASSY RCP 2X4 BK A/2	334725044	A-BLACK	GCP	PLR		M	RR	1	2	3	4	SALEABLE		N/A	N/A	N/A	N/A
								-	6	7	-						
MX150 ASSY RCP 2X4 BK A/6	334725045	A-BLACK	GCP	PLR		M	RR	-	-	-	4	SALEABLE		N/A	N/A	N/A	N/A
								-	6	-	-						
MX150 ASSY RCP 2X4 CPA BK A/6	334725046	A-BLACK	GCP	PLR	CPA	M	RR	1	-	-	-	SALEABLE		N/A	N/A	N/A	N/A
								-	-	7	-						
MX150 ASSY RCP 2X4 LG B/7	334725047	B-LIGHT GRAY	GCP	PLR		M	RR	-	-	-	-	SALEABLE		N/A	N/A	N/A	N/A
								5	-	-	-						
MX150 ASSY RCP 2X4 BK A/3	334725048	A-BLACK	GCP	PLR		M	RR	1	2	-	-	SALEABLE		N/A	N/A	N/A	N/A
								5	6	-	8						
MX150 ASSY RCP 2X4 BK A/5	334725049	A-BLACK	GCP	PLR		M	RR	1	2	-	-	SALEABLE		N/A	N/A	N/A	N/A
								-	-	-	8						
MX150 ASSY RCP 2X4 BK A/5	334725050	A-BLACK	GCP	PLR		M	RR	-	-	-	4	SALEABLE		N/A	N/A	N/A	N/A
								5	6	-	-						
MX150 ASSY RCP 2X4 BK A/4	334725051	A-BLACK	GCP	PLR		M	RR	1	2	3	-	SALEABLE		N/A	N/A	N/A	N/A
								-	6	-	-						
MX150 ASSY RCP 2X4 BK A/4	334725052	A-BLACK	GCP	PLR		M	RR	-	-	-	4	SALEABLE		N/A	N/A	N/A	N/A
								5	-	7	8						
MX150 ASSY RCP 2X4 BK A/4	334725053	A-BLACK	GCP	PLR		M	RR	-	-	3	4	SALEABLE		N/A	N/A	N/A	N/A
								-	-	7	8						
MX150 ASSY RCP 2X4 BK A/3	334725054	A-BLACK	GCP	PLR		M	RR	1	-	3	4	SALEABLE		N/A	N/A	N/A	N/A
								-	-	7	8						
MX150 ASSY RCP 2X4 BK A/6	334725055	A-BLACK	GCP	PLR		M	RR	-	-	-	4	SALEABLE		N/A	N/A	N/A	N/A
								-	-	-	8						
MX150 ASSY RCP 2X4 BK A/5	334725056	A-BLACK	GCP	PLR		M	RR	-	-	-	4	SALEABLE		N/A	N/A	N/A	N/A
								5	-	-	8						
MX150 ASSY RCP 2X4 SG D/0	334725057	D-STONE GRAY	GCP	PLR		M	RR	1	2	3	4	SALEABLE		N/A	N/A	N/A	N/A
								5	6	7	8						
MX150 ASSY RCP 2X4 CPA BK A/5	334725058	A-BLACK	GCP	PLR	CPA	M	RR	-	2	-	-	SALEABLE		N/A	N/A	N/A	N/A
								5	-	-	8						
MX150 ASSY RCP 2X4 LG B/6	334725059	B-LIGHT GRAY	GCP	PLR		M	RR	-	2	-	-	SALEABLE		N/A	N/A	N/A	N/A
								-	-	7	-						
MX150 ASSY RCP 2X4 LG B/7	334725060	B-LIGHT GRAY	GCP	PLR		M	RR	-	2	-	-	SALEABLE		N/A	N/A	N/A	N/A
								-	-	-	-						
MX150 ASSY RCP 2X4 BK A/2	334725061	A-BLACK	GCP	PLR		M	RR	-	2	3	4	SALEABLE		N/A	N/A	N/A	N/A
								-	6	7	8						
MX150 ASSY RCP 2X4 BK A/4	334725062	A-BLACK	GCP	PLR		M	RR	-	2	3	-	SALEABLE		N/A	N/A	N/A	N/A
								-	6	7	-						
MX150 ASSY RCP 2X4 CS CPA BK A/4	334725063	A-BLACK-CLIP	GCP	PLR	CPA	M	RR	-	-	-	-	SALEABLE		34951-0811	34951-0821	34951-0831	34951-0841
								5	6	7	8						
MX150 ASSY RCP 2X4 CS BK A/4	334725064	A-BLACK-CLIP	GCP	PLR		M	RR	-	-	-	-	SALEABLE		34951-0811	34951-0821	34951-0831	34951-0841
								5	6	7	8						
MX150 ASSY RCP 2X4 LG B/4	334725065	B-LIGHT GRAY	GCP	PLR		M	RR	1	-	-	4	SALEABLE		N/A	N/A	N/A	N/A
								-	-	7	8						
MX150 ASSY RCP 2X4 BK A/7	334725066	A-BLACK	GCP	PLR		M	RR	-	-	3	-	SALEABLE		N/A	N/A	N/A	N/A
								-	-	-	-						

molex

MX150 RECEPTACLE 2X4 SEALED ASSEMBLY MAT SEAL
BOM AND PIN OUT SHEET

ASSEMBLY DESCRIPTION	ASSEMBLY PART NUMBER	COMPONENT						BLOCKED TERMINALS				STATUS	COMMENT	OPTIONAL ATTACHMENTS SOLD SEPARATELY			
		THE PRESENCE OF AN ABBREVIATION INDICATES THE PRESENCE OF THAT COMPONENT						CAVITY WITH A NUMBER INDICATES BLOCKED TERMINAL POSITION CAVITY WITHOUT A NUMBER INDICATES OPEN TERMINAL POSITION									
		HOUSING KEY/COLOR	GROMMET CAP	PLR	CPA	MAT SEAL	RING SEAL							BACKSHELL WITH RIBS	BACKSHELL WITHOUT RIBS	90^0 ADAPTOR WITH RIBS	90^0 ADAPTOR WITHOUT RIBS
MX150 ASSY RCP 2X4 CS BK A/5	334725067	A-BLACK-CLIP	GCP	PLR		M	RR	1	-	-	-	SALEABLE		34951-0811	34951-0821	34951-0831	34951-0841
								-	-	7	8						

TABLE OF CONTENTS

SHEET NO.	SHEET DESCRIPTION
1	NOTES AND BOM
2	CONFIGURATIONS
3-4	KEY CONFIGURATIONS
5	RECEPTACLE CONNECTOR ASSEMBLY
6	BACKSHELL NOTES
7	BACKSHELL
8	BACKSHELL CONFIGURATIONS
9	2X10 CONNECTOR INTERFACE DEFINITION

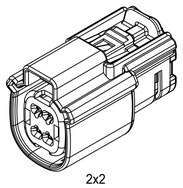

2x2

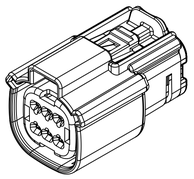

2x3

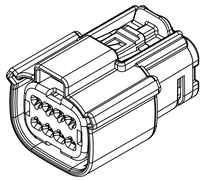

2x4

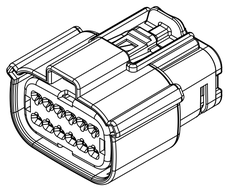

2x6

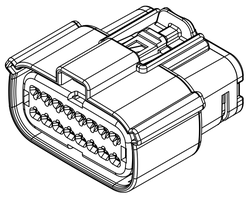

2x8

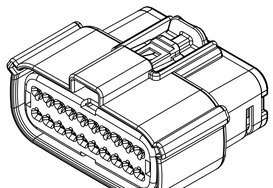

2x10

NOTES: VALID UNLESS OTHERWISE SPECIFIED

1. GENERAL:

a. APPLICATION SPECIFICATION SEE: AS-33472-100
-CONTAINS: PRODUCT INTRODUCTION, PRODUCT SUMMARY, CONNECTOR ASSEMBLY, PACKAGING INFORMATION, CONNECTOR MATING, SERVICE INSTRUCTIONS, ELECTRICAL CONTINUITY CHECKING, CRIMPING, AND TROUBLESHOOTING.
-DESIGNED TO MATE WITH DEVICE OR CONNECTOR AS SPECIFIED IN THE MATING INTERFACE/CONNECTOR DRAWINGS CHART.
*DENOTES DRAWINGS THAT CAN BE ACCESSED AT <http://ewcap.uscarteams.org/>.
-ASSEMBLY SHIPPED WITH PLR IN PRE-LOCK POSITION (SEE PLR PRE-LOCK VIEW SHEET 5).

b. PRODUCT SPECIFICATION SEE:
-STANDARD CONFIGURATION (STD): PS-33472-000
-TRANSMISSION CONFIGURATION (TRNS):
CONTAINS SILICONE: TS-160038-0001
SILICONE FREE: TBD
-UL V0 CONFIGURATION (UL V0): TBD
CONTAINS: PRODUCT INTRODUCTION, PRODUCT SUMMARY, RATINGS (CURRENT, TEMPERATURE, SEALING, AND FLAMMABILITY), TERMINALS, WIRE DIAMETER RANGE, PRODUCT VALIDATION, AND PRODUCT DEVIATIONS.

c. PACKAGING SPECIFICATION PER MOLEX DRAWING: SEE PACKAGING CHART

d. PARTS MUST BE IN COMPLIANCE TO MOLEX CHEMICAL SUBSTANCES FOR PRODUCTS AND PACKAGING SPECIFICATION: QEHS-699000-301

e. DATA MUST BE SUBMITTED UNDER THE MOLEX PART NUMBER TO IMDS (COMPANY ID#13255)

2. DESIGN - MATERIALS:

a. FOR BILL OF MATERIALS SEE:
-STANDARD CONFIGURATION SD-33472-0002
-TRANSMISSION CONGURATION
CONTAINS SILICONE: SD-160038-0002
SILICONE FREE: SD-160092-0002
-UL V0 CONFIGURATION SD-160074-0002

b. TRANSMISSION CONNECTOR COMPONENTS MUST MEET THE MATERIAL REQUIREMENTS SPECIFIED IN TS-160038-0001 & TBD

3. DESIGN - GEOMETRY:

a. THE 3-D CAD DATA IS BASIC (WITHOUT TOLERANCE) AND MASTER FOR THIS PART WITH THE EXCEPTION OF UNDERLINED DIMENSIONS. DIMENSIONAL INFORMATION NOT SHOWN ON THIS DRAWING IS DEFINED BY THE DATA FILE AT ITS LATEST REVISION.

b. GEOMETRIC DIMENSIONS AND TOLERANCES PER ASME Y14.5M-2009

c. EDGES AND UNDIMENSIONED DETAILS PER ISO13715

d. CORNERS SHOWN AS SHARP TO BE R 0.2 MAX.

e. LETTERING SHALL BE 0.15 MAX RAISED IN 0.25 MAX RECESS PAD. THIS INCLUDES RECYCLING CODE, CAVITY ID, VENDOR IDENTIFICATION, AND CUSTOMER MATERIAL NUMBER.

f. VISUAL DEFECTS SHALL MEET COSMETIC STANDARD PS-45499-002 (Class B).

g. LASER MARKING:
1. PART NUMBER
2. DAY OF THE YEAR
3. SHIFT
4. YEAR
FOR ADDITIONAL INFORMATION SEE SECTION 5 UNDER PROCEDURES IN ES-34735-008.

B h. 2X2 CLIP-SLOT DESIGN IS BASED ON USCAR/EWCAP 7mm CLIP SLOT EWCAP - 005 - 7
2X3 THRU 2X10 CLIP-SLOT DESIGN IS BASED ON USCAR/EWCAP 11mm CLIP SLOT EWCAP - 005 - 11

DESCRIPTION	DRAWING NO.
2X2	PK-31300-635
2X3	PK-31300-903
2X4	PK-31300-903
2X6	PK-31300-903
2X8	PK-31300-903
2X10	PK-31300-903

MATING INTERFACE/CONNECTOR DRAWINGS

DESCRIPTION	INTERFACE DEFINITION	MOLEX INLINE
STANDARD 2X2	*150-S-004-2-Z02	SD-33482-0001
UL V0 2X2	*150-S-004-2-Z02	SD-33482-0001
STANDARD 2X3	*150-S-006-2-Z02	SD-33482-0001
TRANSMISSION 2X3	*150-S-006-2-Z02	N/A
STANDARD 2X4	*150-S-008-2-Z02	SD-33482-0001
UL V0 2X4	*150-S-008-2-Z02	SD-33482-0001
STANDARD 2X6	*150-S-012-2-Z01	SD-33482-0001
UL V0 2X6	*150-S-012-2-Z01	SD-33482-0001
STANDARD 2X8	*150-S-016-2-Z01	SD-33482-0001
STANDARD 2X10	SD-33472-0001	SD-33482-0001
UL V0 2X10	SD-33472-0001	SD-33482-0001

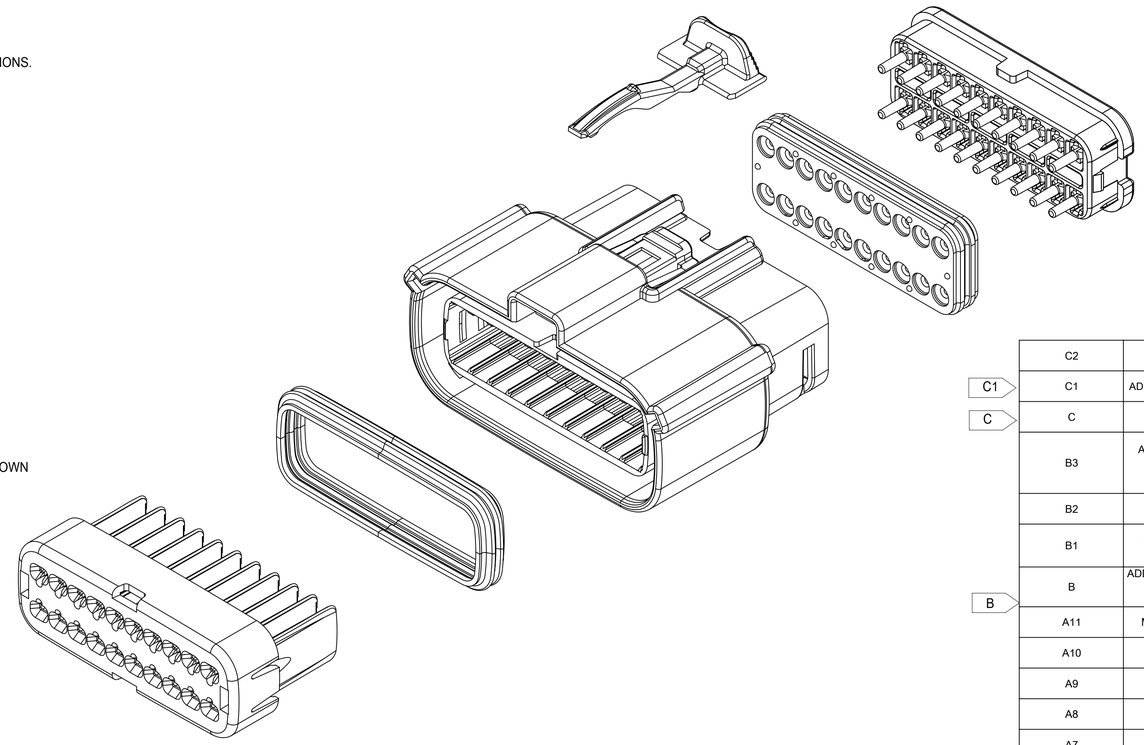

	REV	REV DESCRIPTION
	C2	ADDED MOLEX BACKSHELL DETAILS
C1	C1	ADDED 2X6-TRNS.-WITH/WITHOUT CLIPSLOT *
C	C	ADDED 2X10-STD.-WITH CLIPSLOT *
	B3	ADD ROW FOR 2X6 V0 ON SHEET 5DIM3# UPDATE TO 25.0 MAX FOR V0DIM11# UPDATE TO 33.85 MAX FOR V0
	B2	ADD 2X6 UL V0 CONFIGURATIONS
	B1	UPDATE 2X6 W/O CLIPSLOT DIM G ON TABLE OF SHEET 5
B	B	ADDED 2X2 - STD- WITH CLIPSLOT, 2X8 - STD- WITH CLIPSLOT AND NOTE h
	A11	MINOR GEOMETRY CHANGE FOR UL V0
	A10	UPDATED 2X4 DRAWING NUMBER
	A9	UPDATED 2X10 PART NUMBERS
	A8	UPDATED 2X3 DRAWING NUMBER
	A7	UPDATED 2X10 INTERFACE
	A6	ADDED TRANSMISSION REFERENCES
	A5	ADD 2X10 INTERFACE SHEETS
	A4	ADD UL V0 CONFIGURATIONS
	A3	ADDED 2X3 STD AND TRANSMISSION
	A2	UPDATED 2X8 BLD DRAWINGS
	A1	FIXED TYPO IN NOTE 1a, UPDATED 2X6 MOLEX INLINE BLADE DRAWING
	A	INITIAL RELEASE

INSPECTION NUMBER LOG
LAST NUMBER: 11
ADDED: 11
REMOVED:

SYMBOLS
A = 0
C = 0
E = 0
S = 0
= 0
F = 0
= 0
= 0
= 0
V = 0

THIS DRAWING CONTAINS INFORMATION THAT IS PROPRIETARY TO MOLEX ELECTRONIC TECHNOLOGIES, LLC AND SHOULD NOT BE USED WITHOUT WRITTEN PERMISSION

DIMENSION UNITS	SCALE
mm	1:1

GENERAL TOLERANCES (UNLESS SPECIFIED)

ANGULAR TOL	±	1.0 °
4 PLACES	±	
3 PLACES	±	
2 PLACES	±	0.1
1 PLACE	±	0.2
0 PLACES	±	

DRAFT WHERE APPLICABLE MUST REMAIN WITHIN DIMENSIONS

CURRENT REV DESC:

EC NO: 171650
DRWN: DDEB 2018/01/19
CHK'D: MVANSLAMBROU 2018/02/16
APPR: MVANSLAMBROU 2018/02/16

INITIAL REVISION:
DRWN: APROFFITT 2014/05/14
APPR: VKOSHY 2014/06/27

THIRD ANGLE PROJECTION | DRAWING: A1-SIZE | SERIES: 33472

molex

MX150 RCPT
DUAL ROW SEALED ASSEMBLY MAT SEAL

PRODUCT CUSTOMER DRAWING

DOCUMENT NUMBER	DOC TYPE	DOC PART	REVISION
SD-33472-0001	PSD	001	C2

MATERIAL NUMBER | CUSTOMER: GENERAL MARKET | SHEET NUMBER: 1 OF 11

DOCUMENT STATUS	P1	RELEASE DATE	2018/02/16 22:02:25

TEMPLATE: PRODUCT DRAWING
REVISION: H
DATE: 2017/10/06

SHEET DESCRIPTION

CONFIGURATIONS

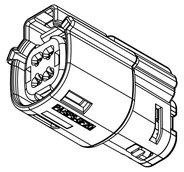

2X2 - STD.
2X2 - TRNS. - SILICONE FREE †

B

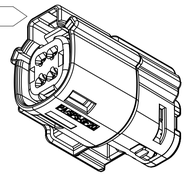

2X2 - STD. - WITH CLIPSLOT *

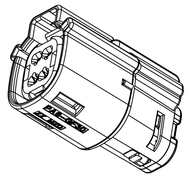

† 2X2 - UL V0

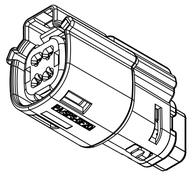

2X2 - STD. - LENGTHENED

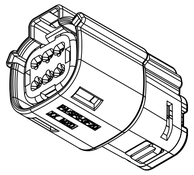

2X3 - STD.
2X3 - TRNS. - CONTAINS SILICONE †

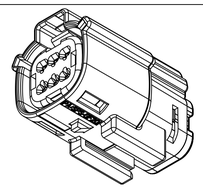

2X3 - STD. - WITH CLIPSLOT *

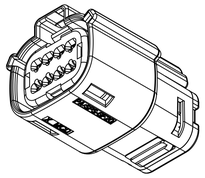

2X4 - STD.

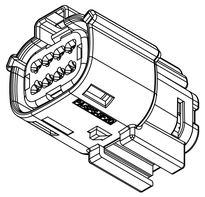

2X4 - STD. - WITH CLIPSLOT *

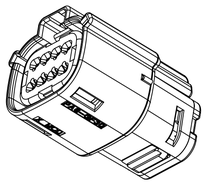

† 2X4 - UL V0

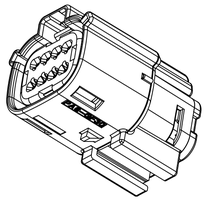

† 2X4 - UL V0-WITH CLIPSLOT*

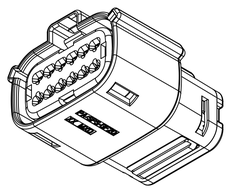

2X6 - STD.
C1 † 2X6 - TRNS.

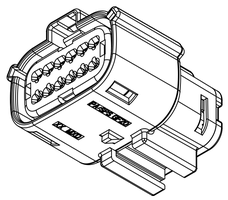

2X6 - STD. - WITH CLIPSLOT *
C1 † 2X6 - TRNS. - WITH CLIPSLOT *

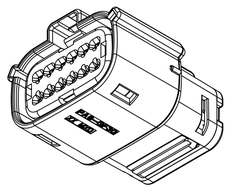

† 2X6 - UL V0

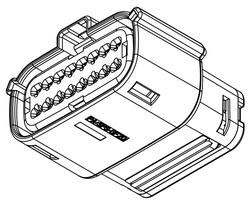

2X8 - STD.

B

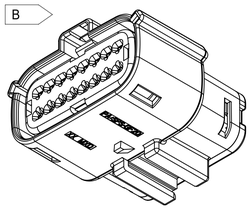

2X8 - STD. - WITH CLIPSLOT *

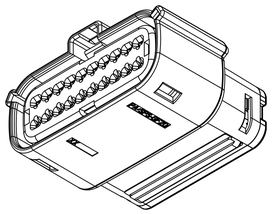

2X10 - STD.

C

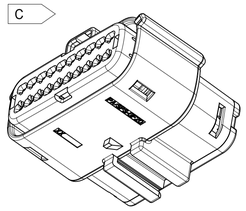

2X10 - STD. - WITH CLIPSLOT *

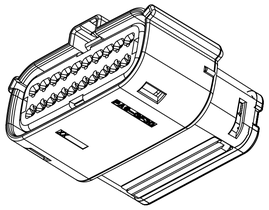

† 2X10 - UL V0

* WITH CLIPSLOT CONFIGURATION DOES NOT
MEET THE USCAR PACKAGING FRAME REQUIREMENTS
† MINOR GEOMETRY DIFFERENCE THAN STANDARD CONFIGURATION
SEE NOTES 1a & 2a-b FOR MORE INFORMATION

DOCUMENT STATUS	P1	RELEASE DATE	2018/02/16	22:02:25

SYMBOLS
= 0
= 0
= 0
= 0
= 0
= 0
= 0
= 0
= 0

THIS DRAWING CONTAINS INFORMATION THAT IS PROPRIETARY TO MOLEX ELECTRONIC TECHNOLOGIES, LLC AND SHOULD NOT BE USED WITHOUT WRITTEN PERMISSION

DIMENSION UNITS	SCALE
mm	1:1

GENERAL TOLERANCES (UNLESS SPECIFIED)

ANGULAR TOL	±	1.0 °
4 PLACES	±	
3 PLACES	±	
2 PLACES	±	0.1
1 PLACE	±	0.2
0 PLACES	±	

DRAFT WHERE APPLICABLE MUST REMAIN WITHIN DIMENSIONS

CURRENT REV DESC:

EC NO: 171650
DRWN: DDEB 2018/01/19
CHK'D: MVANSLAMBROU 2018/02/16
APPR: MVANSLAMBROU 2018/02/16

INITIAL REVISION:
DRWN: APROFFITT 2014/05/14
APPR: VKOSHY 2014/06/27

THIRD ANGLE PROJECTION | DRAWING: A1-SIZE | SERIES: 33472

molex

MX150 RCPT
DUAL ROW SEALED ASSEMBLY MAT SEAL

PRODUCT CUSTOMER DRAWING

DOCUMENT NUMBER	DOC TYPE	DOC PART	REVISION
SD-33472-0001	PSD	001	C2

MATERIAL NUMBER	CUSTOMER	SHEET NUMBER
	GENERAL MARKET	2 OF 11

SHEET DESCRIPTION

KEY CONFIGURATIONS

2X2

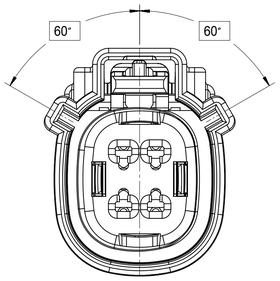

KEY A

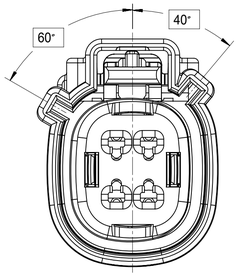

KEY B

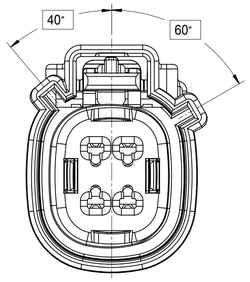

KEY C

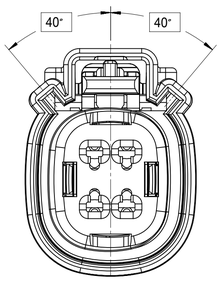

KEY D

2X3

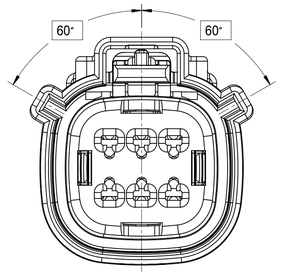

KEY A

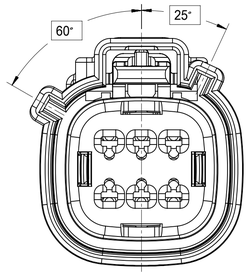

KEY B

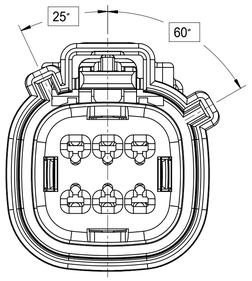

KEY C

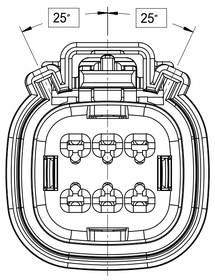

KEY D

2X4

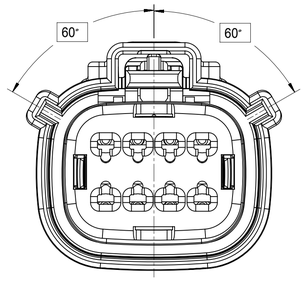

KEY A

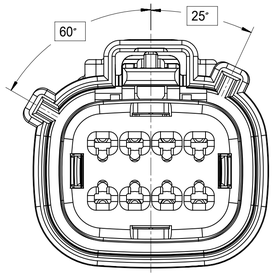

KEY B

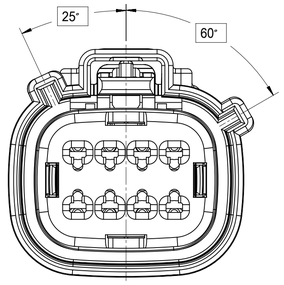

KEY C

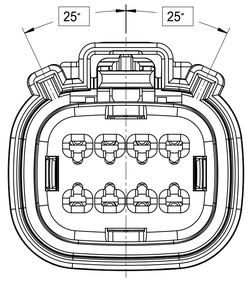

KEY D

SYMBOLS	
A	= 0
C	= 0
B	= 0
S	= 0
	= 0
C	= 0
	= 0
	= 0
D	= 0

THIS DRAWING CONTAINS INFORMATION THAT IS PROPRIETARY TO MOLEX ELECTRONIC TECHNOLOGIES, LLC AND SHOULD NOT BE USED WITHOUT WRITTEN PERMISSION

DIMENSION UNITS	SCALE
mm	1:1

GENERAL TOLERANCES (UNLESS SPECIFIED)		
ANGULAR TOL	±	1.0 °
4 PLACES	±	
3 PLACES	±	
2 PLACES	±	0.1
1 PLACE	±	0.2
0 PLACES	±	

DRAFT WHERE APPLICABLE MUST REMAIN WITHIN DIMENSIONS

CURRENT REV DESC:

EC NO: 171650
DRWN: DDEB 2018/01/19
CHK'D: MVANSLAMBROU 2018/02/16
APPR: MVANSLAMBROU 2018/02/16

INITIAL REVISION:
DRWN: APROFFITT 2014/05/14
APPR: VKOSHY 2014/06/27

THIRD ANGLE PROJECTION | DRAWING: A1-SIZE | SERIES: 33472

molex

MX150 RCPT
DUAL ROW SEALED ASSEMBLY MAT SEAL

PRODUCT CUSTOMER DRAWING

DOCUMENT NUMBER	DOC TYPE	DOC PART	REVISION
SD-33472-0001	PSD	001	C2

MATERIAL NUMBER	CUSTOMER	SHEET NUMBER
	GENERAL MARKET	3 OF 11

DOCUMENT STATUS	P1	RELEASE DATE	2018/02/16 22:02:25

TEMPLATE: creator-tb-prod-A-1
SCHEMATIC: no
DATE: 2017/10/09

SHEET DESCRIPTION

KEY CONFIGURATIONS CONT.

2X6

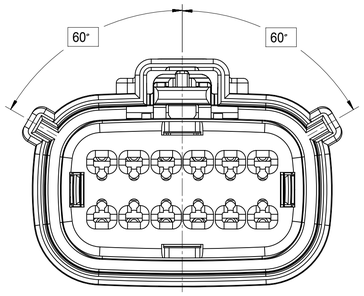

KEY A

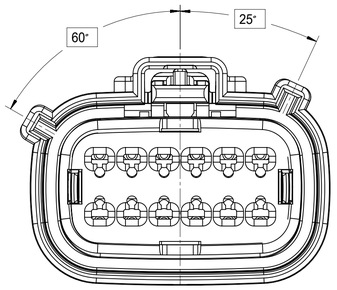

KEY B

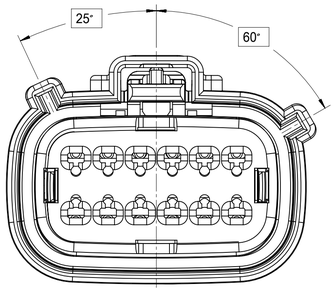

KEY C

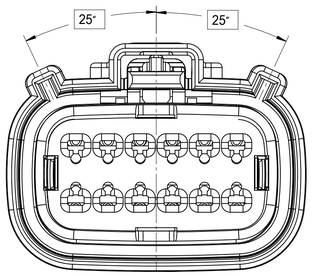

KEY D

2X8

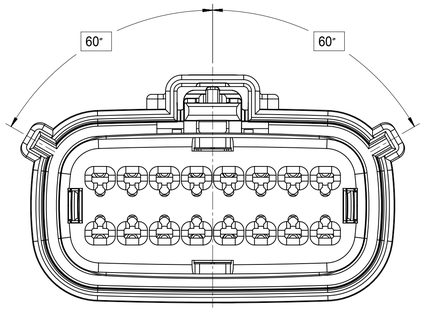

KEY A

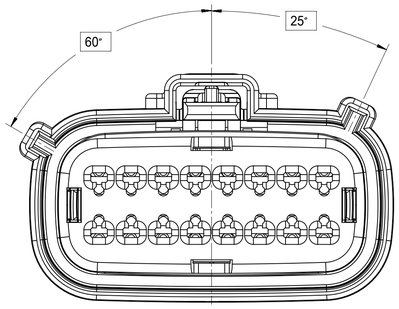

KEY B

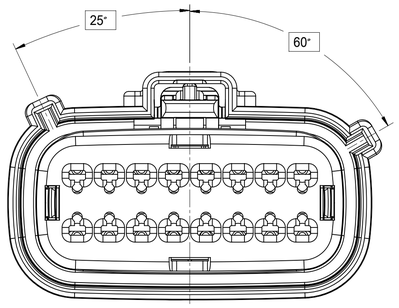

KEY C

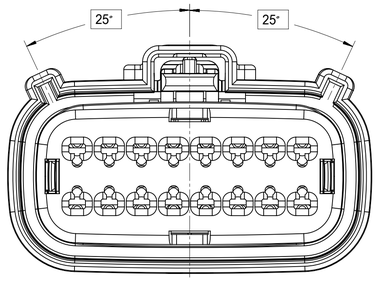

KEY D

2X10

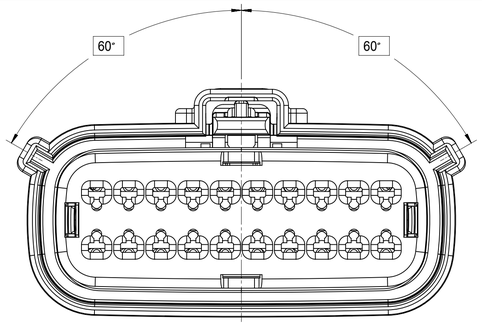

KEY A

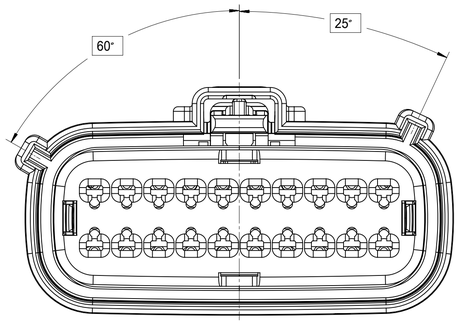

KEY B

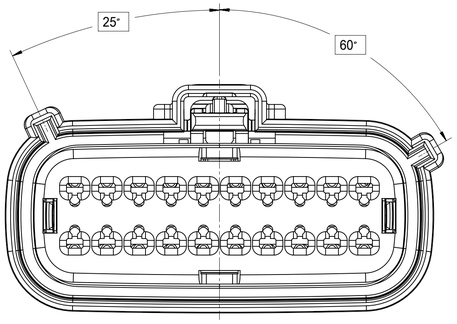

KEY C

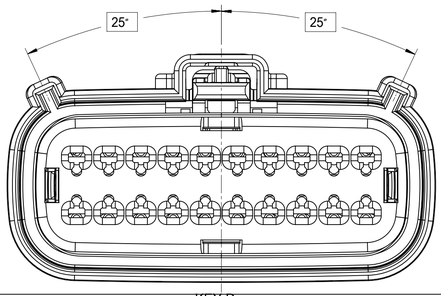

KEY D

SYMBOLS	
F/A	= 0
F/C	= 0
F/P	= 0
S	= 0
▼	= 0
C	= 0
☒	= 0
■	= 0
V	= 0

THIS DRAWING CONTAINS INFORMATION THAT IS PROPRIETARY TO MOLEX ELECTRONIC TECHNOLOGIES, LLC AND SHOULD NOT BE USED WITHOUT WRITTEN PERMISSION

DIMENSION UNITS	SCALE
mm	1:1

GENERAL TOLERANCES (UNLESS SPECIFIED)

ANGULAR TOL	±	1.0 °
4 PLACES	±	
3 PLACES	±	
2 PLACES	±	0.1
1 PLACE	±	0.2
0 PLACES	±	

DRAFT WHERE APPLICABLE MUST REMAIN WITHIN DIMENSIONS

CURRENT REV DESC:

EC NO: 171650
DRWN: DDEB 2018/01/19
CHK'D: MVANSLAMBROU 2018/02/16
APPR: MVANSLAMBROU 2018/02/16

INITIAL REVISION:
DRWN: APROFFITT 2014/05/14
APPR: VKOSHY 2014/06/27

THIRD ANGLE PROJECTION | DRAWING: A1-SIZE | SERIES: 33472

molex

MX150 RCPT
DUAL ROW SEALED ASSEMBLY MAT SEAL

PRODUCT CUSTOMER DRAWING

DOCUMENT NUMBER	DOC TYPE	DOC PART	REVISION
SD-33472-0001	PSD	001	C2

MATERIAL NUMBER	CUSTOMER	SHEET NUMBER
	GENERAL MARKET	4 OF 11

DOCUMENT STATUS	P1	RELEASE DATE	2018/02/16 22:02:25

FORMAT: master-tb-prod-A1
DRAWING: N
DATE: 2017/10/06

SHEET DESCRIPTION

RECEPTACLE CONNECTOR ASSEMBLY

CHARTED DIMENSIONS

DESCRIPTION	DIMENSIONS							
	A	B	C	D	E	F	G	J
2X2 W/O CLIPSLOT	18.58	1.75	25.45	24.81	37.65	N/A	2.75±0.50	
2X2 W/ CLIPSLOT	18.58	1.75	27.65	24.81	37.65	N/A	2.75±0.50	
2X2 LENGTHENED	18.58	1.75	25.45	24.81	42.25	N/A	2.75±0.50	20.04
2X3 W/ CLIPSLOT	22.25	3.5	30.50	N/A	37.65	27.96	4.0±0.4	
2X3 W/O CLIPSLOT	22.25	3.5	26.24	24.90	37.65	N/A	4.0±0.4	
2X4 W/ CLIPSLOT	25.75	1.75	31.50	N/A	37.65	28.00	2.75±0.50	27.04
2X4 W/O CLIPSLOT	25.75	1.75	29.19	24.81	37.65	N/A	2.75±0.50	27.04
2X6 W/ CLIPSLOT	32.75	1.75	35.58	N/A	37.65	27.76	2.75±0.50	
2X6 W/O CLIPSLOT	32.75	1.75	35.58	24.90	37.65	N/A	2.75±0.50	32.95
2X6 W/O CLIPSLOT V0	32.75	1.75	35.58	25.0	37.65	N/A	2.75±0.50	33.85
2X8 W/O CLIPSLOT	39.80	1.75	42.25	24.90	37.65	N/A	4.0±0.4	
2X8 W/ CLIPSLOT	39.80	1.75	42.25	N/A	37.65	27.80	4.0±0.4	
2X10 W/O CLIPSLOT	46.75	1.75	49.95	24.90	37.65	N/A	2.75±0.50	48.04
2X10 W/ CLIPSLOT	46.75	1.75	49.95	N/A	37.65	27.80	2.75±0.50	

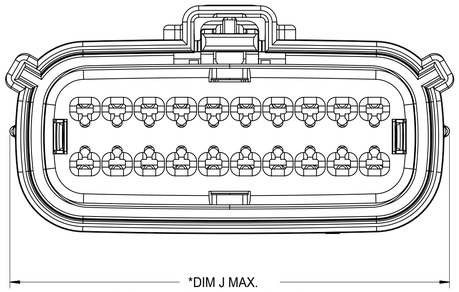

* APPLIES TO UL-V0 CONFIGURATIONS ONLY

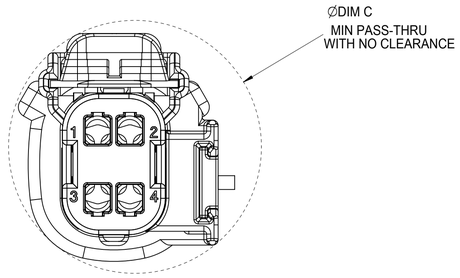

B APPLIES TO 2X2 - STD. - WITH CLIPSLOT ONLY

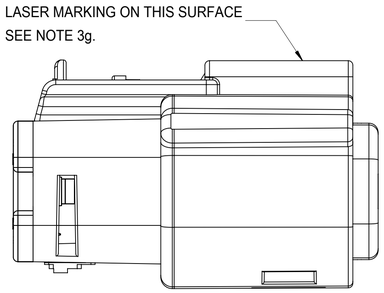

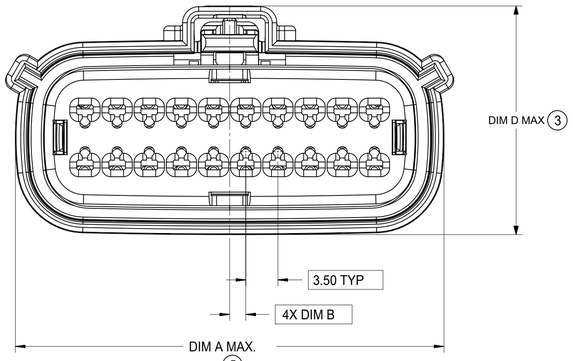

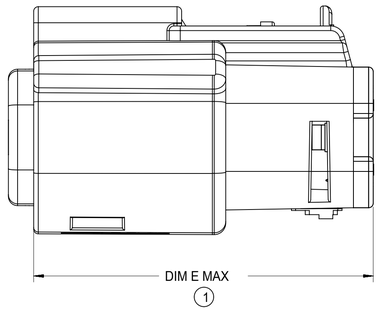

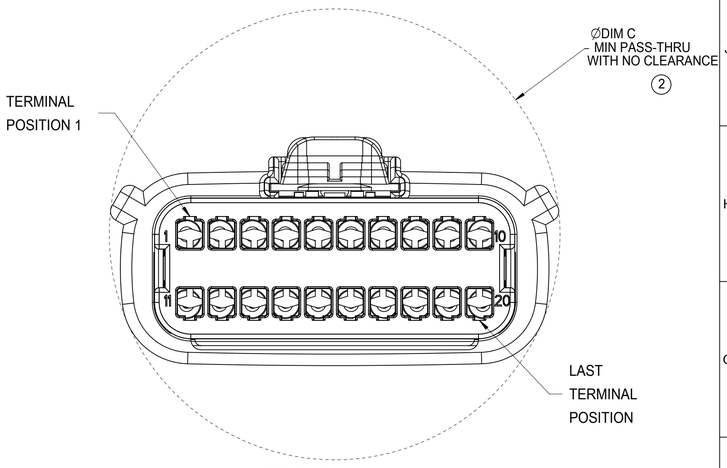

REAR VIEW
(WIRE HARNESS SIDE)

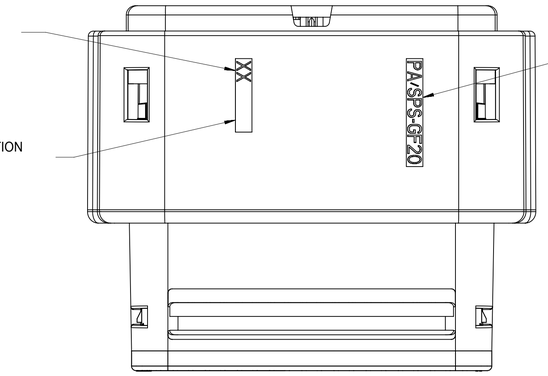

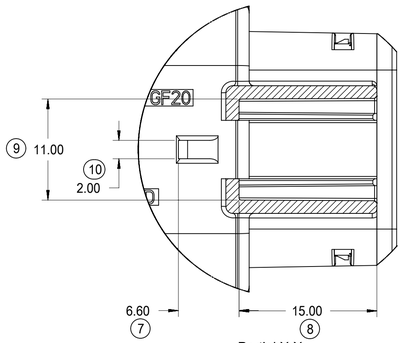

Partial X-X
SCALE 3:1

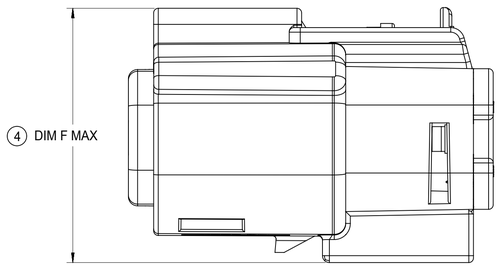

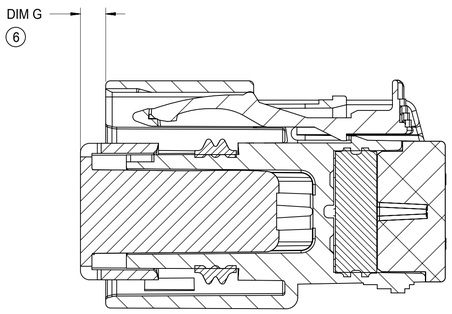

PRIMARY LOCK REINFORCEMENT (PLR) SHOWN
IN PRE-STAGED POSITION

SECTION Y-Y

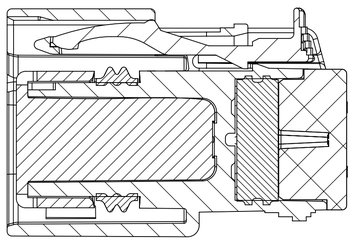

PRIMARY LOCK REINFORCEMENT (PLR) SHOWN
IN FINAL-LOCK POSITION

SECTION Z-Z

SYMBOLS	
A = 0	
E = 0	
F = 0	
S = 0	
= 0	
C = 0	
= 0	
= 0	
D = 0	

THIS DRAWING CONTAINS INFORMATION THAT IS PROPRIETARY TO MOLEX ELECTRONIC TECHNOLOGIES, LLC AND SHOULD NOT BE USED WITHOUT WRITTEN PERMISSION

DIMENSION UNITS	SCALE
mm	1:1

GENERAL TOLERANCES (UNLESS SPECIFIED)

ANGULAR TOL	±	1.0 °
4 PLACES	±	
3 PLACES	±	
2 PLACES	±	0.1
1 PLACE	±	0.2
0 PLACES	±	

DRAFT WHERE APPLICABLE MUST REMAIN WITHIN DIMENSIONS

CURRENT REV DESC:

EC NO: 171650
DRWN: DDEB 2018/01/19
CHK'D: MVANSLAMBROU 2018/02/16
APPR: MVANSLAMBROU 2018/02/16

INITIAL REVISION:
DRWN: APROFFITT 2014/05/14
APPR: VKOSHY 2014/06/27

THIRD ANGLE PROJECTION | DRAWING: A1-SIZE | SERIES: 33472

molex

MX150 RCPT
DUAL ROW SEALED ASSEMBLY MAT SEAL

PRODUCT CUSTOMER DRAWING

DOCUMENT NUMBER	DOC TYPE	DOC PART	REVISION
SD-33472-0001	PSD	001	C2

MATERIAL NUMBER	CUSTOMER	SHEET NUMBER
	GENERAL MARKET	5 OF 11

DOCUMENT STATUS	P1	RELEASE DATE	2018/02/16 22:02:25

PCDREV7: Header-Sheet-A1
PCDREV7: Footer
DATE: 2017/10/06

SHEET DESCRIPTION
BACKSHELL NOTES

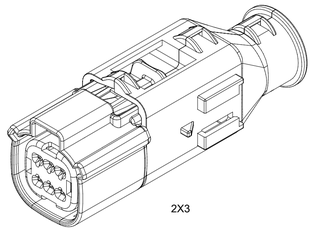

2X3

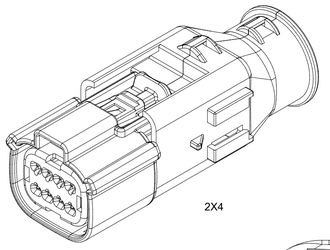

2X4

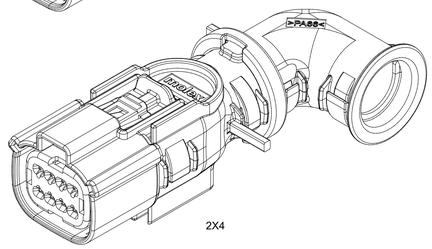

2X4

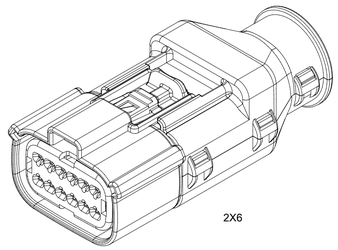

2X6

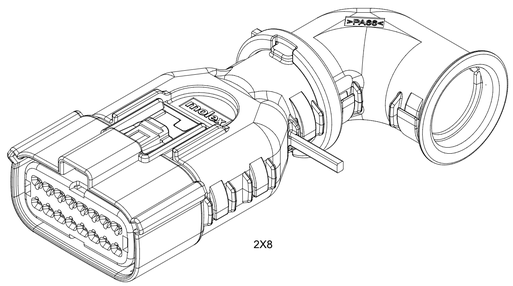

2X8

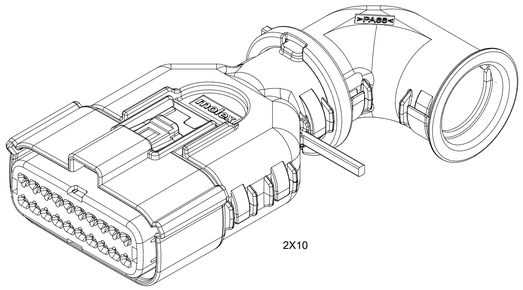

2X10

BACKSHELL NOTES: VALID UNLESS OTHERWISE SPECIFIED

1. GENERAL:

a. APPLICATION SPECIFICATION SEE: AS-34951-001

-DESIGNED TO MATE WITH RECEPTACLE SEALED ASSEMBLY SPECIFIED IN MOLEX DRAWING SD-33472-0001.

-SYSTEM TO BE USED WITH WIRE WITHIN DIAMETER RANGE OF 1.2mm TO 2.69mm.

-COMPONENTS ARE OPTIONAL AND MUST BE PURCHASED SEPERATELY.

-DESIGN IS OWNED BY SCHLEMMER FOR SCHLEMMER BACKSHELL.

-DESIGN IS OWNED BY MOLEX FOR MOLEX BACKSHELL.

-90˚ ADAPTOR DESIGN IS OWNED BY MOLEX.

-FOR ADDITIONAL INFORMATION SEE THE BACKSHELL COMPONENT DRAWING SD-34951-0001.

BACKSHELL CUSTOMER
MODEL NUMBER LEGEND

34951-XXXX

CUSTOMER MODEL COMPONENTS
- 0 - SCHLEMMER BACKSHELL ONLY
- 1 - SCHLEMMER BACKSHELL & MX150 HOUSING KEY A ASSEMBLY
- 2 - SCHLEMMER BACKSHELL & MX150 HOUSING KEY B ASSEMBLY
- 3 - SCHLEMMER BACKSHELL & MX150 HOUSING KEY C ASSEMBLY
- 4 - SCHLEMMER BACKSHELL & MX150 HOUSING KEY D ASSEMBLY
- 5 - MOLEX BACKSHELL ONLY
- 6 - MOLEX BACKSHELL & MX150 HOUSING KEY A ASSEMBLY
- 7 - MOLEX BACKSHELL & MX150 HOUSING KEY B ASSEMBLY
- 8 - MOLEX BACKSHELL & MX150 HOUSING KEY C ASSEMBLY
- 9 - MOLEX BACKSHELL & MX150 HOUSING KEY D ASSEMBLY

BACKSHELL FEATURES
- 1 - WITH RIBS
- 2 - WITHOUT RIBS
- 3 - 90˚ ADAPTOR

MX150 CIRCUIT SIZE 04, 06, 08, 12, 16, 20

90˚ ADAPTOR

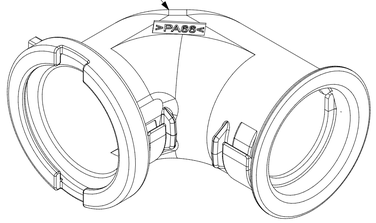

BACKSHELL (BKS)

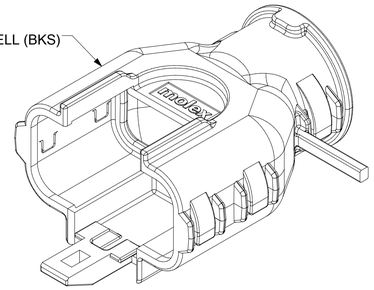

RECEPTACLE SEALED ASSEMBLY

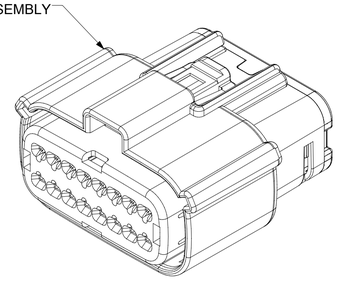

SCALE 2:1

SYMBOLS	
A	= 0
C	= 0
E	= 0
S	= 0
	= 0
C	= 0
	= 0
	= 0
V	= 0

THIS DRAWING CONTAINS INFORMATION THAT IS PROPRIETARY TO MOLEX ELECTRONIC TECHNOLOGIES, LLC AND SHOULD NOT BE USED WITHOUT WRITTEN PERMISSION

DIMENSION UNITS	SCALE
mm	1.5:1

GENERAL TOLERANCES (UNLESS SPECIFIED)		
ANGULAR TOL	±	1.0 °
4 PLACES	±	
3 PLACES	±	
2 PLACES	±	0.1
1 PLACE	±	0.2
0 PLACES	±	

DRAFT WHERE APPLICABLE MUST REMAIN WITHIN DIMENSIONS

CURRENT REV DESC:

EC NO: 171650
DRWN: DDEB 2018/01/19
CHK'D: MVANSLAMBROU 2018/02/16
APPR: MVANSLAMBROU 2018/02/16

INITIAL REVISION:
DRWN: APROFFITT 2014/05/14
APPR: VKOSHY 2014/06/27

THIRD ANGLE PROJECTION | DRAWING: A1-SIZE | SERIES: 33472

molex

MX150 RCPT
DUAL ROW SEALED ASSEMBLY MAT SEAL

PRODUCT CUSTOMER DRAWING

DOCUMENT NUMBER	DOC TYPE	DOC PART	REVISION
SD-33472-0001	PSD	001	C2

MATERIAL NUMBER	CUSTOMER	SHEET NUMBER
	GENERAL MARKET	6 OF 11

DOCUMENT STATUS	P1	RELEASE DATE	2018/02/16 22:02:25

TEMPLATE: molex-landscape
REVISION: H
DATE: 2017/10/05

SHEET DESCRIPTION
SCHLEMMER BACKSHELL

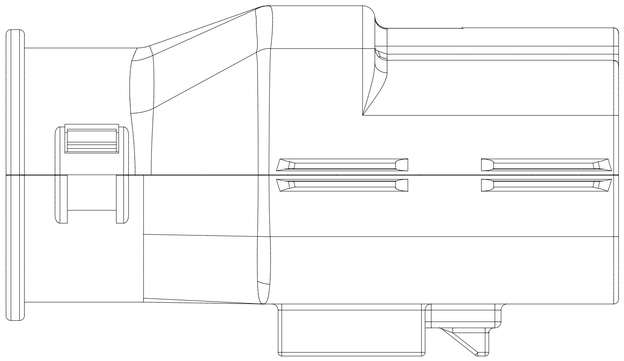

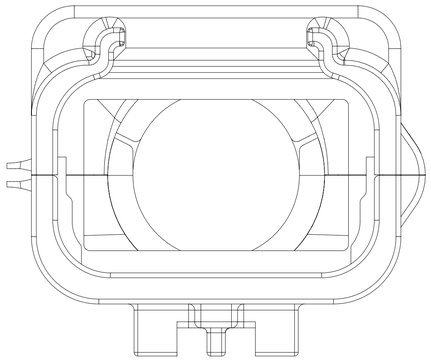

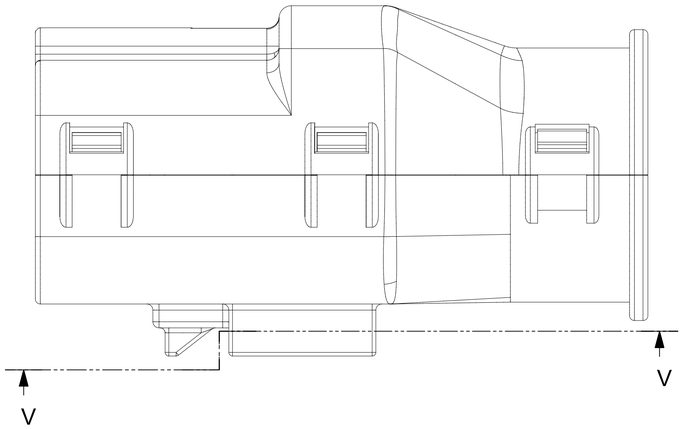

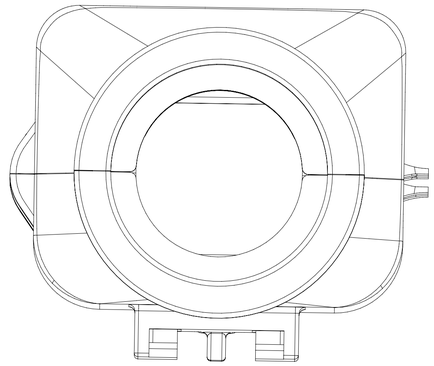

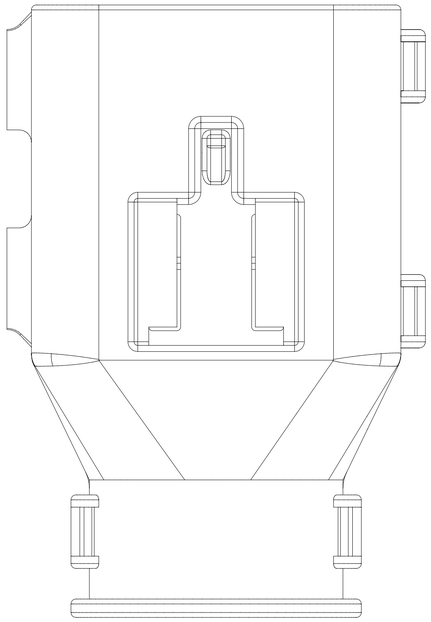

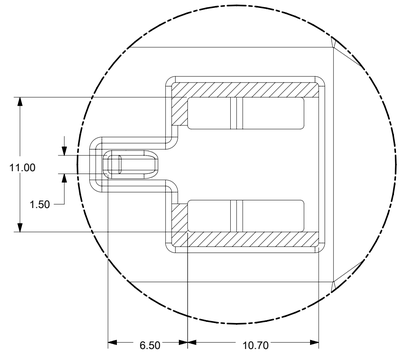

Partial V-V
SCALE 4:1

SYMBOLS	
F/A	= 0
F/C	= 0
F/E	= 0
S	= 0
▼	= 0
C	= 0
☒	= 0
■	= 0
V	= 0

THIS DRAWING CONTAINS INFORMATION THAT IS PROPRIETARY TO MOLEX ELECTRONIC TECHNOLOGIES, LLC AND SHOULD NOT BE USED WITHOUT WRITTEN PERMISSION

DIMENSION UNITS	SCALE
mm	4:1

GENERAL TOLERANCES (UNLESS SPECIFIED)

ANGULAR TOL	±	1.0 °
4 PLACES	±	
3 PLACES	±	
2 PLACES	±	0.1
1 PLACE	±	0.2
0 PLACES	±	

DRAFT WHERE APPLICABLE MUST REMAIN WITHIN DIMENSIONS

CURRENT REV DESC:

EC NO: 171650
DRWN: DDEB 2018/01/19
CHK'D: MVANSLAMBROU 2018/02/16
APPR: MVANSLAMBROU 2018/02/16

INITIAL REVISION:
DRWN: APROFFITT 2014/05/14
APPR: VKOSHY 2014/06/27

THIRD ANGLE PROJECTION | DRAWING: A1-SIZE | SERIES: 33472

molex

MX150 RCPT
DUAL ROW SEALED ASSEMBLY MAT SEAL

PRODUCT CUSTOMER DRAWING

DOCUMENT NUMBER	DOC TYPE	DOC PART	REVISION
SD-33472-0001	PSD	001	C2

MATERIAL NUMBER	CUSTOMER	SHEET NUMBER
	GENERAL MARKET	7 OF 11

DOCUMENT STATUS	P1	RELEASE DATE	2018/02/16 22:02:25

FORMAT: molex-tb-prod-A1-
DRAWING: 1
DATE: 2017/10/06

SHEET DESCRIPTION
MOLEX BACKSHELL

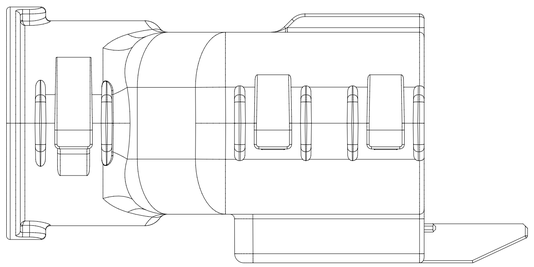

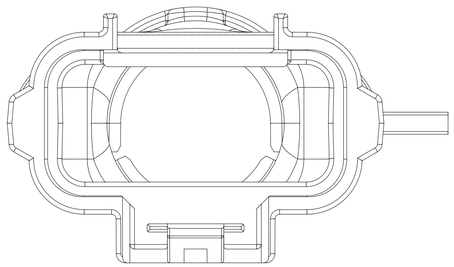

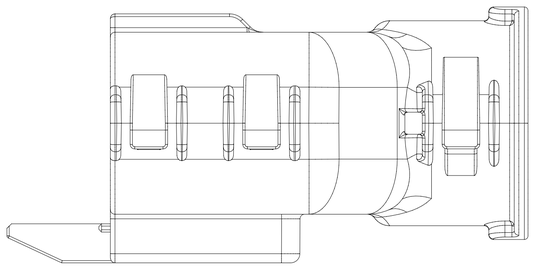

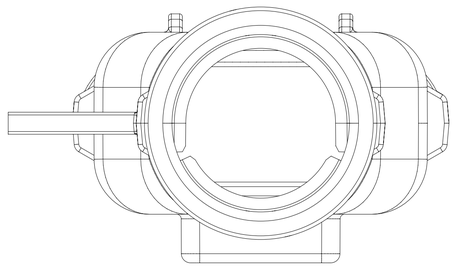

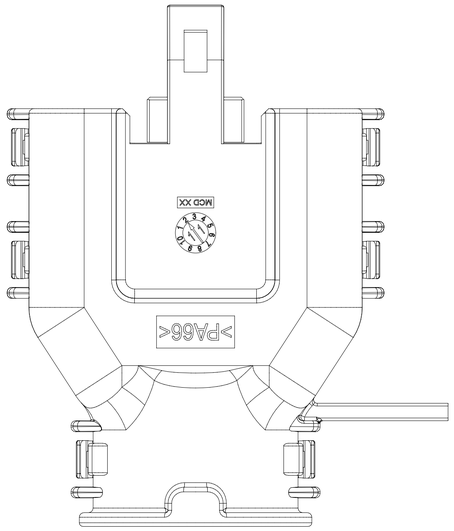

SYMBOLS	
= 0	
= 0	
= 0	
= 0	
= 0	
= 0	
= 0	
= 0	
= 0	

THIS DRAWING CONTAINS INFORMATION THAT IS PROPRIETARY TO MOLEX ELECTRONIC TECHNOLOGIES, LLC AND SHOULD NOT BE USED WITHOUT WRITTEN PERMISSION

DIMENSION UNITS	SCALE
mm	3:1

GENERAL TOLERANCES (UNLESS SPECIFIED)

ANGULAR TOL	±	1.0 °
4 PLACES	±	
3 PLACES	±	
2 PLACES	±	0.1
1 PLACE	±	0.2
0 PLACES	±	

DRAFT WHERE APPLICABLE MUST REMAIN WITHIN DIMENSIONS

CURRENT REV DESC:

EC NO: 171650
DRWN: DDEB 2018/01/19
CHK'D: MVANSLAMBROU 2018/02/16
APPR: MVANSLAMBROU 2018/02/16

INITIAL REVISION:
DRWN: APROFFITT 2014/05/14
APPR: VKOSHY 2014/06/27

THIRD ANGLE PROJECTION | DRAWING: A1-SIZE | SERIES: 33472

molex

MX150 RCPT
DUAL ROW SEALED ASSEMBLY MAT SEAL

PRODUCT CUSTOMER DRAWING

DOCUMENT NUMBER	DOC TYPE	DOC PART	REVISION
SD-33472-0001	PSD	001	C2

MATERIAL NUMBER	CUSTOMER	SHEET NUMBER
	GENERAL MARKET	8 OF 11

DOCUMENT STATUS	P1	RELEASE DATE	2018/02/16 22:02:25

FORMAT: molex-tb-prod-A1-
DRAWING: 31
DATE: 2017/10/04

SHEET DESCRIPTION
SCHLEMMER BACKSHELL CONFIGURATIONS

CHARTED DIMENSIONS	
DESCRIPTION	DIMENSIONS
	H
2X3 W/ CLIPSLOT	N/A
2X3 W/O CLIPSLOT	28.50
2X4 W/ CLIPSLOT	N/A
2X4 W/O CLIPSLOT	30.75
2X6 W/ CLIPSLOT	N/A
2X6 W/O CLIPSLOT	35.83

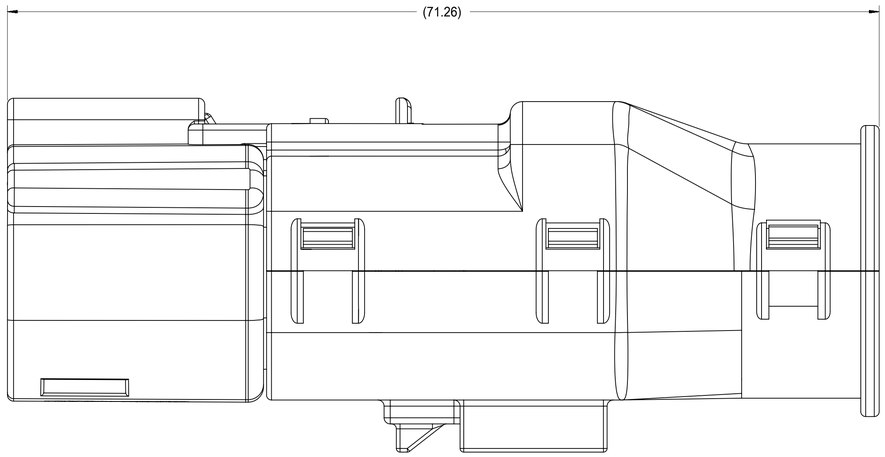

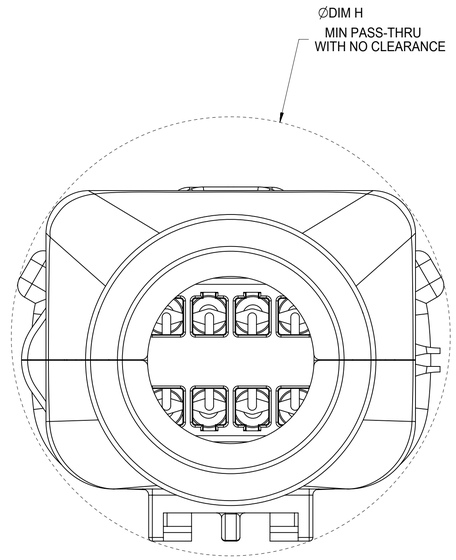

RECEPTACLE SEALED ASSEMBLY WITH RECEPTACLE BACKSHELL

QUALITY SYMBOLS	
FA	= 0
FC	= 0
FP	= 0
▼	= 0
C	= 0
☒	= 0
■	= 0
G	= 0

THIS DRAWING CONTAINS INFORMATION THAT IS PROPRIETARY TO MOLEX ELECTRONIC TECHNOLOGIES, LLC AND SHOULD NOT BE USED WITHOUT WRITTEN PERMISSION

EC NO: 171650 2018/01/19
DRWN: DDEB 2018/02/16
CHK'D: MVANSLAMBROU 2018/02/16
APPR: MVANSLAMBROU

GENERAL TOLERANCES (UNLESS SPECIFIED)		
ANGULAR TOL	±	1.0 °
4 PLACES	±	
3 PLACES	±	
2 PLACES	±	0.1
1 PLACE	±	0.2
0 PLACES	±	

DRAFT WHERE APPLICABLE MUST REMAIN WITHIN DIMENSIONS

REV: C2

DIMENSION UNITS	SCALE
mm	4:1
DRWN BY: APROFFITT	DATE: 2014/05/14
CHK'D BY: KBORUSZEWSKI	DATE: 2014/06/16
APPR BY: VKOSHY	DATE: 2014/06/27
DRAWING SIZE: A1	THIRD ANGLE PROJECTION

molex®

MX150 RCPT
DUAL ROW SEALED ASSEMBLY MAT SEAL

PRODUCT CUSTOMER DRAWING

SERIES	MATERIAL NUMBER	CUSTOMER
33472		GENERAL MARKET

DOCUMENT NUMBER	DOC TYPE	DOC PART	SHEET NUMBER
SD-33472-0001	PSD	001	9 OF 11

RELEASE STATUS	P1	RELEASE DATE	2018/02/16 22:02:25

TEMPLATE: master-tb-gen.tmt
REVISION: D
DATE: 2017/10/05

SHEET DESCRIPTION
MOLEX BACKSHELL CONFIGURATIONS

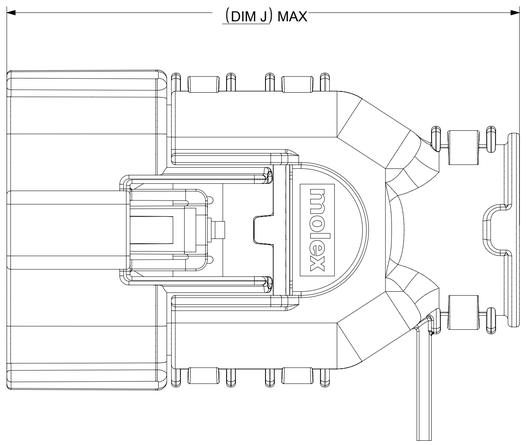

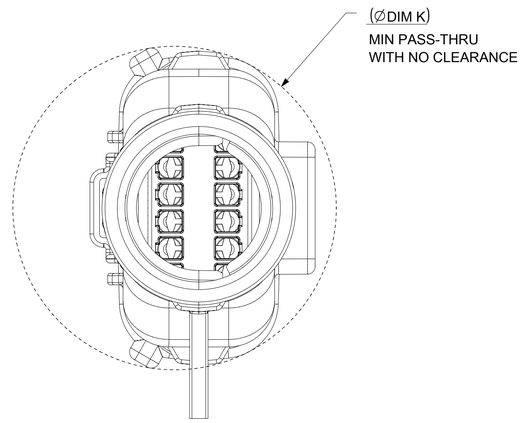

RECEPTACLE SEALED ASSEMBLY WITH RECEPTACLE BACKSHELL

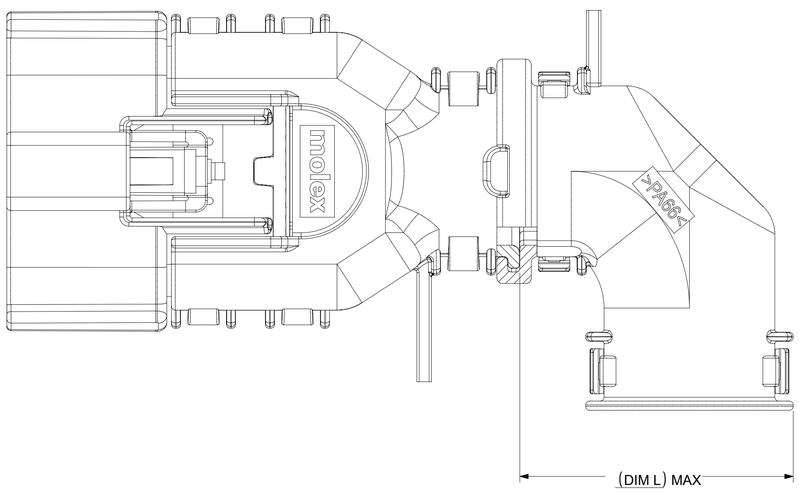

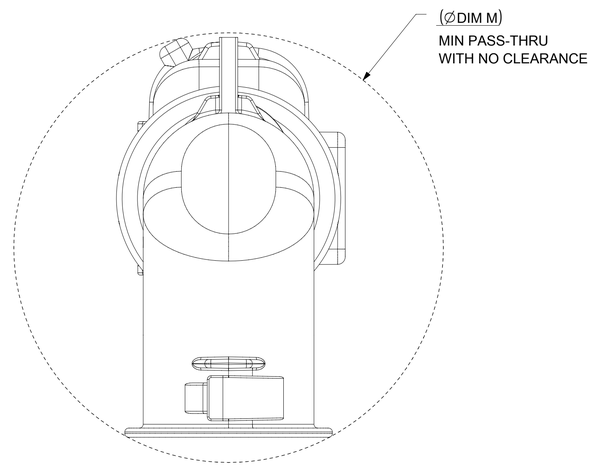

ADD THE VALUE OF 'L' TO THE TOTAL DIMENSION
WHENEVER ADAPTOR IS USED

CHARTED DIMENSIONS

	DESCRIPTION	DIMENSIONS			
		J	K	L	M
	2X2 W/O CLIPSLOT	TBD	TBD	TBD	TBD
B	2X2 W/ CLIP SLOT	TBD	TBD	TBD	TBD
	2X2 LENGTHENED	TBD	TBD	TBD	TBD
	2X4 W/ CLIPSLOT	58.39	32.85	32.10	44.26
	2X4 W/O CLIPSLOT	N/A	N/A	N/A	N/A
	2X8 W/ CLIPSLOT	67.19	42.65	36.10	56.49
B	2X8 W/O CLIPSLOT	N/A	N/A	N/A	N/A
	2X10 W/ CLIPSLOT	67.19	42.65	36.10	56.49
C	2X10 W/O CLIPSLOT	N/A	N/A	N/A	N/A

SYMBOLS	
A =	0
C =	0
F =	0
S =	0
▼ =	0
C =	0
☒ =	0
■ =	0
V =	0

THIS DRAWING CONTAINS INFORMATION THAT IS PROPRIETARY TO MOLEX ELECTRONIC TECHNOLOGIES, LLC AND SHOULD NOT BE USED WITHOUT WRITTEN PERMISSION

DIMENSION UNITS	SCALE
mm	2.5:1

GENERAL TOLERANCES (UNLESS SPECIFIED)

ANGULAR TOL	±	1.0 °
4 PLACES	±	
3 PLACES	±	
2 PLACES	±	0.1
1 PLACE	±	0.2
0 PLACES	±	

DRAFT WHERE APPLICABLE MUST REMAIN WITHIN DIMENSIONS

CURRENT REV DESC:

EC NO:	171650	
DRWN:	DDEB	2018/01/19
CHK'D:	MVANSLAMBROU	2018/02/16
APPR:	MVANSLAMBROU	2018/02/16

INITIAL REVISION:

DRWN:	APROFFITT	2014/05/14
APPR:	VKOSHY	2014/06/27

THIRD ANGLE PROJECTION | DRAWING: A1-SIZE | SERIES: 33472

molex

MX150 RCPT
DUAL ROW SEALED ASSEMBLY MAT SEAL

PRODUCT CUSTOMER DRAWING

DOCUMENT NUMBER	DOC TYPE	DOC PART	REVISION
SD-33472-0001	PSD	001	C2

MATERIAL NUMBER	CUSTOMER	SHEET NUMBER
	GENERAL MARKET	10 OF 11

DOCUMENT STATUS	P1	RELEASE DATE	2018/02/16 22:02:25

TEMPLATE: master-tb-portrait.t
PDM NAME: 33472-0001
DATE: 2017-10-06

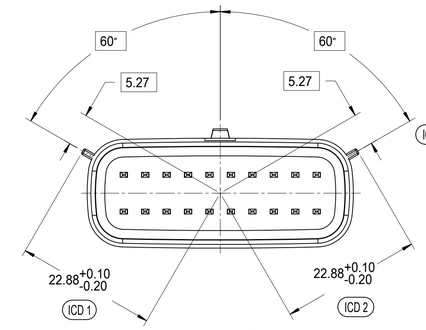

KEYING OPTION A
SCALE 4:1

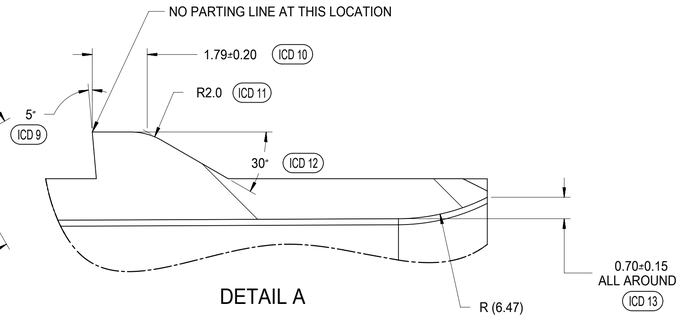

DETAIL A
SCALE 10:1

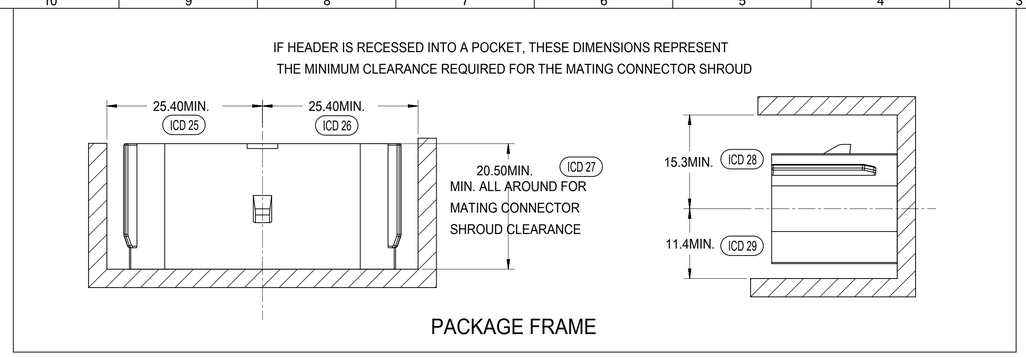

PACKAGE FRAME

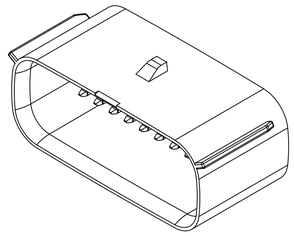

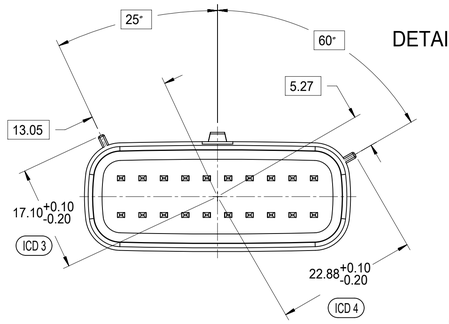

KEYING OPTION B
SCALE 4:1

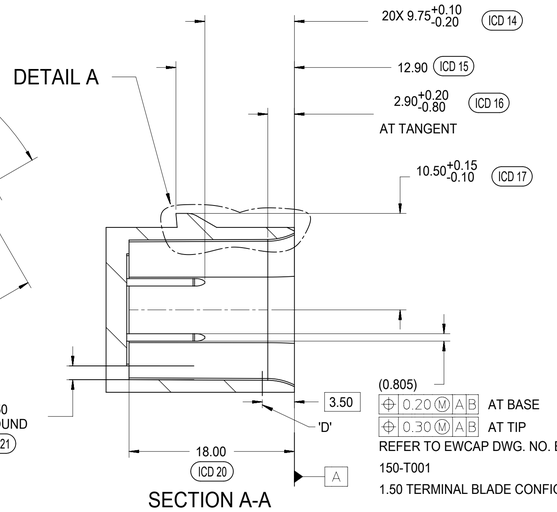

SECTION A-A

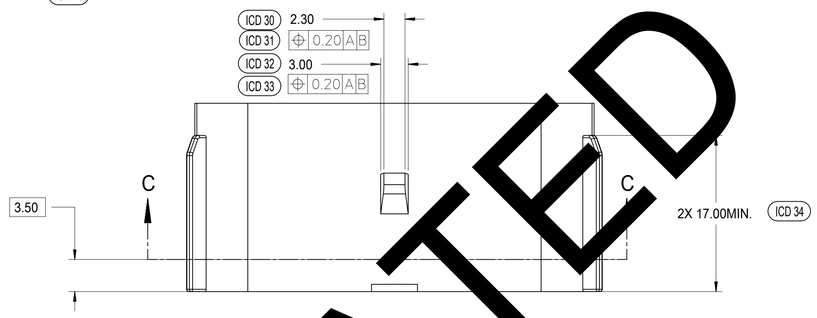

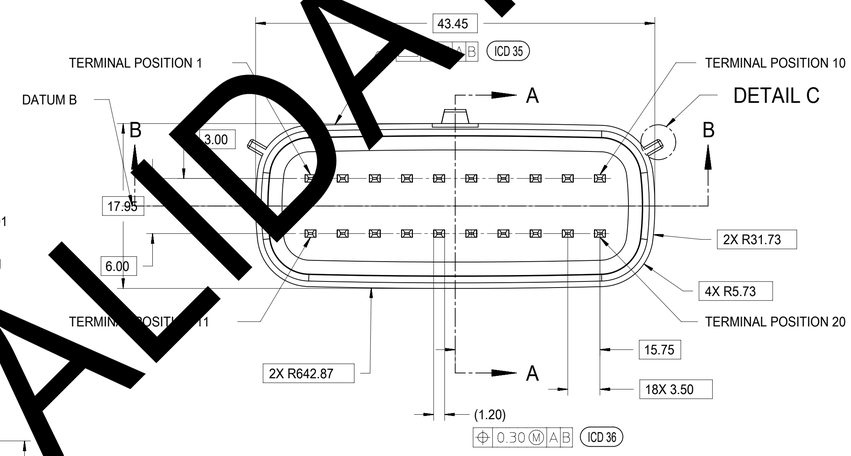

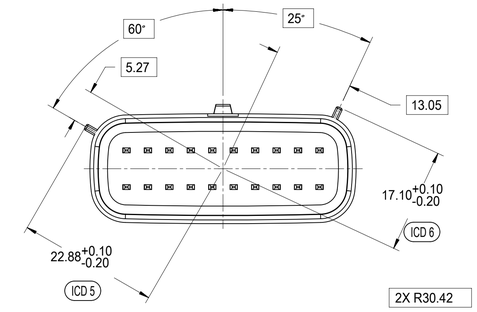

KEYING OPTION C
SCALE 4:1

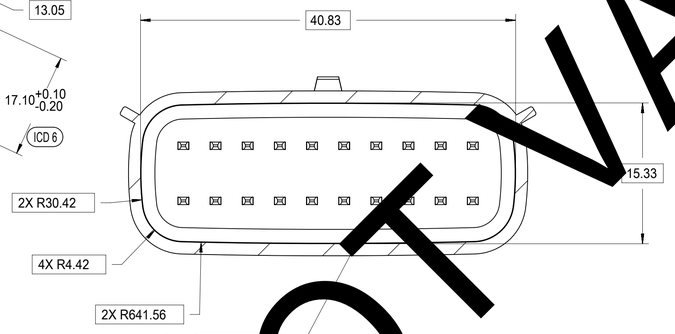

SECTION C

SURFACE MUST BE FREE
OF SURFACE DEFECTS AND
PARTING LINES FOR
SEALING ALL AROUND

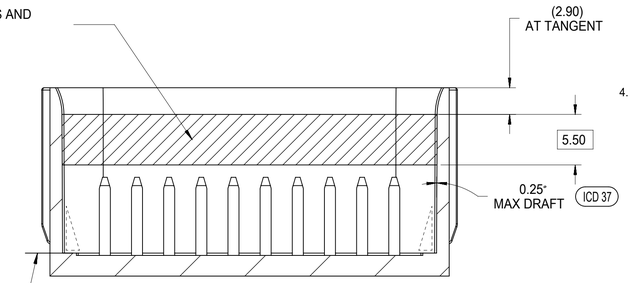

SECTION B-B

CONSTRUCTION BELOW THIS SURFACE IS
NOT CONTROLLED BY EWCAP. NO PLASTIC
FEATURES MAY EXTEND ABOVE THIS SURFACE.

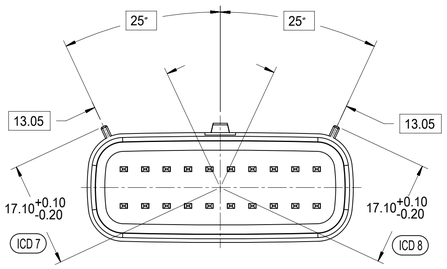

KEYING OPTION D
SCALE 4:1

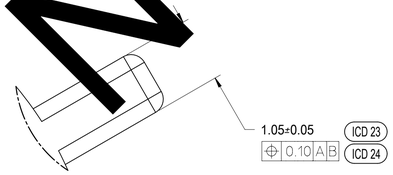

DETAIL C
SCALE 20:1
APPLIES 2X
SEE KEYING OPTION VIEWS
FOR POSITIONS

MATING INTERFACE NOTES: VALID UNLESS OTHERWISE SPECIFIED

1. GENERAL:
   a. DESIGNED TO MATE WITH MOLEX CONNECTOR 33472-2XXX & 160008-0XXX & 160074-0XXX
      A FULL SHROUD ON THE MATING CONNECTOR IS REQUIRED TO INSURE THAT THE CONNECTOR-HEADER POLARIZATION FEATURES (OPTIONS A THRU D) WILL FUNCTION. THE FULL SHROUD ALSO PREVENTS SCOOP DAMAGE TO THE HEADER PINS. REFER TO 'SAE/USCAR-12 CONNECTOR DESIGN GUIDE LINES' FOR ADDITIONAL INFORMATION
   b. PARTS MUST BE IN COMPLIANCE TO MOLEX CHEMICAL SUBSTANCES FOR PRODUCTS AND PACKAGING SPECIFICATION: ES-40000-5016
   c. FLAMMABILITY REQUIREMENT: PER ISO3795 OR GM3191
      1. BURN RATE 100mm/MIN MAXIMUM
      2. MATERIAL MUST BE SELF EXTINGUISHING

2. MATERIALS:
   a. MATERIAL: SPS/NYLON GF20, REGRIND 20% MAX BY WEIGHT
   b. STANDARD COLORS FOR POLARIZATION (SEE KEYING OPTIONS TABLE). DEVIATION REQUIRES APPROVAL OF AUTHORIZED PERSON
   c. FOR BLADE BASE MATERIAL, PLATING AND PROCESS LUBRICANT:
      1. TIN: - BASE MATERIAL:COPPER ALLOY, CONDUCTIVITY >=60% IACS AT 20°C;
         TENSILE STRENGTH >= 410 N/mm² - BARRIER MATERIAL: NICKEL DEPOSIT FROM NICKEL SULFAMATE PLATING SOLUTION W/O ANY ADDITIVES
         THICKNESS: 1.25 - 2.25 MICROMETERS
         - TOP LAYER: 100% ELECTRO-DEPOSITED TIN, MATTE FINISH
         THICKNESS: 2.5 - 4.0 MICROMETERS
      2. SILVER: - BARRIER MATERIAL: ELECTRO-DEPOSITED DUCTILE SULPHAMATE NICKEL
         THICKNESS: 1.25 - 2.25 MICROMETERS
         - TOP LAYER: ELECTRO-DEPOSITED SEMI-BRIGHT PURE SILVER (0.5% MAX IMPURITIES) OVER NICKEL ANTI-TARNISH TREATMENT EVERBRIGHT WS
         THICKNESS: 1.9 - 3.3 MICROMETERS
      3. BLADES MUST CONFORM TO ES-40000-5007, EXCEPT FOR SPECULAR REFLECTIVITY - SECTION 6.0
      4. ANY PROCESS LUBRICANT REMAINING ON THE TERMINAL MUST NOT VARNISH OR DEGRADE IT'S ELECTRICAL PERFORMANCE UP TO A MAXIMUM CLASS AMBIENT TERMPERATURE PER SAE USCAR-2 FOR 1008 HOURS, PROCESS LUBRICANTS SHOULD BE APPROVED BY THE RESPONSIBLE ENGINEER.
      5. INFORMATION FOR BLADE DESIGN WAS DEVELOPED FROM EWCAP DWG: EWCAP-001

3. GEOMETRY:
   a. THIS IS A 100% CAD GENERATED PART. THE CAD MATHEMATICAL DATA IS THE MASTER FOR THIS PART. FOR DIMENSIONAL OR ANY INFORMATION NOT SHOWN ON THIS DRAWING, ANALYZE THE CAD MODEL.
   b. GEOMETRIC DIMENSIONS AND TOLERANCES PER ASME Y14.5M - 1994
   c. GENERAL TOLERANCES: SEE TITLE BLOCK
   d. EDGES AND UNDIMENSIONED DETAILS PER ISO13715

4. MANUFACTURING:
   a. DRAFT TO BE WITHIN TOLERANCE.
      PLUS DRAFT - INDICATES A DIMENSION REPRESENTS THE SMALLEST SIZE OF A FEATURE. DRAFT WILL ADD MATERIAL.
      MINUS DRAFT - INDICATES A DIMENSION REPRESENTS THE LARGEST SIZE OF A FEATURE. DRAFT WILL REMOVE MATERIAL.
   b. ALLOWABLE FLASH MAX 0.20 HIGH BY MAX 0.13 THICK.
   c. ALLOWABLE SPLIT/PARTING LINE MISMATCH 0.2 MAX.
   d. VISUAL DEFECTS SHALL MEET COSMETIC STANDARD PS-45499-002 (Class B)
   e. NO EXTERNAL MOLD RELEASE AGENT ALLOWED DURING MANUFACTURING
   f. NO PARTING LINES, NO DRAFT, MISMATCHES OR EJECTOR MARKS PERMISSIBLE WITHIN SEALING SURFACE. SEALING SURFACE TOOLING TO BE PROCESSED TO A SURFACE FINISH OF NTMA #70 (400 PAPER) MINIMUM.

P/N	OPTION	MATING CONNECTOR COLOR
150-S-020-2-D02	D	STONE GRAY
150-S-020-2-C02	C	DK GRAY
150-S-020-2-B02	B	LT GRAY
150-S-020-2-A02	A	BLACK

DOCUMENT STATUS	P1	RELEASE DATE	2018/02/16 22:02:25

SYMBOLS	
F =	0
C =	0
P =	0
S =	0
=	0
C =	0
=	0
=	0
=	0

DIMENSION UNITS	SCALE
mm	1:1

GENERAL TOLERANCES (UNLESS SPECIFIED)		
ANGULAR TOL	±	1.0 °
4 PLACES	±	
3 PLACES	±	
2 PLACES	±	0.1
1 PLACE	±	0.2
0 PLACES	±	

DRAFT WHERE APPLICABLE MUST REMAIN WITHIN DIMENSIONS

THIS DRAWING CONTAINS INFORMATION THAT IS PROPRIETARY TO MOLEX ELECTRONIC TECHNOLOGIES, LLC AND SHOULD NOT BE USED WITHOUT WRITTEN PERMISSION

CURRENT REV DESC:

EC NO:	171650	
DRWN:	DDEB	2018/01/19
CHK'D:	MVANSLAMBROU	2018/02/16
APPR:	MVANSLAMBROU	2018/02/16

INITIAL REVISION:

DRWN:	APROFFITT	2014/05/14
APPR:	VKOSHY	2014/06/27

THIRD ANGLE PROJECTION | DRAWING: A1-SIZE | SERIES: 33472

molex

MX150 RCPT
DUAL ROW SEALED ASSEMBLY MAT SEAL

PRODUCT CUSTOMER DRAWING

DOCUMENT NUMBER	DOC TYPE	DOC PART	REVISION
SD-33472-0001	PSD	001	C2

MATERIAL NUMBER	CUSTOMER	SHEET NUMBER
	GENERAL MARKET	11 OF 11

NOT VALIDATED

MX150 RECEPTACLE 2X2 SEALED ASSEMBLY MAT SEAL
BOM AND PIN OUT SHEET

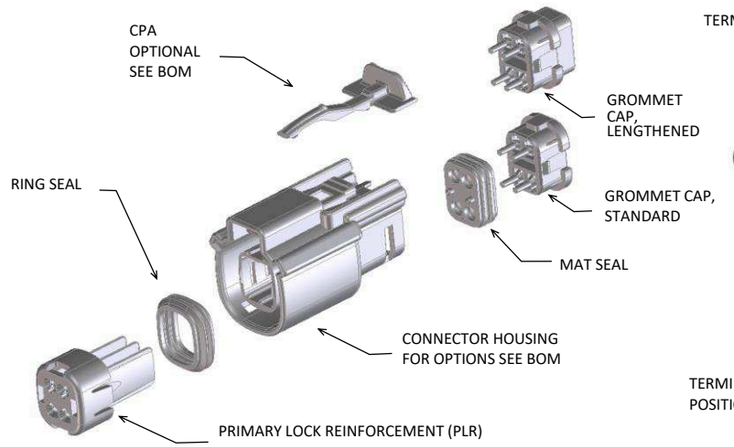

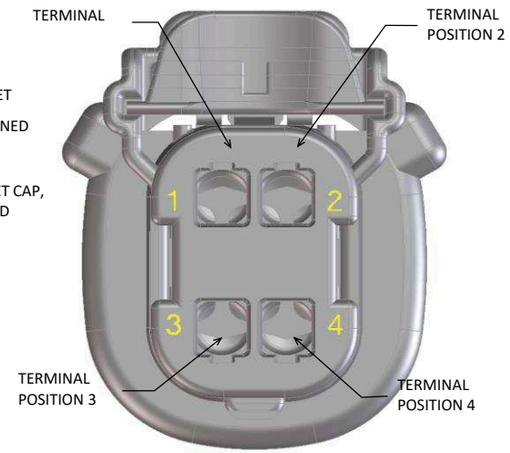

ABBREVIATION	DESCRIPTION	COLOR	MATERIAL
A-BLK	HOUSING, KEYING OPTION A	BLACK	SPS/NYLON GF20
B-LG	HOUSING, KEYING OPTION B	LIGHT GRAY	SPS/NYLON GF20
C-BR	HOUSING, KEYING OPTION C	BROWN	SPS/NYLON GF20
D-GR	HOUSING, KEYING OPTION D	GREEN	SPS/NYLON GF20
C-DG	HOUSING, KEYING OPTION C	DARK GRAY	SPS/NYLON GF20
D-SG	HOUSING, KEYING OPTION D	STONE GRAY	SPS/NYLON GF20
A-YW	HOUSING, KEYING OPTION A	YELLOW	SPS/NYLON GF20
A-BLK-CLIP	HOUSING, KEYING OPTION A WITH CLIPSLOT	BLACK	SPS/NYLON GF20
B-LG-CLIP	HOUSING, KEYING OPTION B WITH CLIPSLOT	LIGHT GRAY	SPS/NYLON GF20
C-DG-CLIP	HOUSING, KEYING OPTION C WITH CLIPSLOT	DARK GRAY	SPS/NYLON GF20
D-SG-CLIP	HOUSING, KEYING OPTION D WITH CLIPSLOT	STONE GRAY	SPS/NYLON GF20
A-YW-CLIP	HOUSING, KEYING OPTION A WITH CLIPSLOT	YELLOW	SPS/NYLON GF20
GCP	GROMMET CAP (STANDARD PLUGGED)	BLACK	SPS/NYLON GF20
GCO	GROMMET CAP (STANDARD OPEN)	BLACK	SPS/NYLON GF20
GCLP	GROMMET CAP (LENGTHENED PLUGGED)	BLACK	SPS/NYLON GF20
GCLO	GROMMET CAP (LENGTHENED OPEN)	BLACK	SPS/NYLON GF20
PLR	PLR	NATURAL	SPS/NYLON GF20
CPA	CPA	RED	PBT GF30
M	MAT SEAL	RUST RED	INHERENTLY LUBRICATED SILICONE
R	RING SEAL	GREEN	INHERENTLY LUBRICATED SILICONE

FOR ADDITIONAL INFORMATION SEE SD-33472-0001

ASSEMBLY DESCRIPTION	ASSEMBLY PART NUMBER	COMPONENT						BLOCKED TERMINALS											STATUS	COMMENTS	OPTIONAL ATTATCHMENTS SOLD SEPERATELY	
		THE PRESENCE OF AN ABBREVIATION INDICATES THE PRESENCE OF THAT COMPONENT.						CAVITY WITH A NUMBER INDICATES BLOCKED TERMINAL POSITION CAVITY WITHOUT A NUMBER INDICATES OPEN TERMINAL POSITION														
		HOUSING KEY/COLOR	GROMMET CAP	PLR	CPA	MAT SEAL	RING SEAL	1	2	3	4										BACKSHELL WITH RIBS	BACKSHELL WITHOUT RIBS
KEY A, BLACK, W/O CPA	33472-4001	A-BLK	GCO	PLR		M	R												SALEABLE			
KEY B, LIGHT GRAY, W/O CPA	33472-4002	B-LG	GCO	PLR		M	R												SALEABLE			
KEY C, BROWN, W/O CPA	33472-4003	C-BR	GCO	PLR		M	R												NOT RECOMMENDED	SEE 33472-4042		
KEY D, GREEN, W/O CPA	33472-4004	D-GR	GCO	PLR		M	R												NOT RECOMMENDED	SEE 33472-4043		
KEY A, BLACK, W/CPA	33472-4006	A-BLK	GCO	PLR	CPA	M	R												SALEABLE			
KEY B, LIGHT GRAY, W/CPA	33472-4007	B-LG	GCO	PLR	CPA	M	R												SALEABLE			
KEY C, BROWN, W/CPA	33472-4008	C-BR	GCO	PLR	CPA	M	R												NOT RECOMMENDED	SEE 33472-4044		
KEY D, GREEN, W/CPA	33472-4009	D-GR	GCO	PLR	CPA	M	R												NOT RECOMMENDED	SEE 33472-4045		
KEY A, BLACK, W/O CPA	33472-4031	A-BLK	GCP	PLR		M	R	1	2	3	4								SALEABLE			
KEY B, LIGHT GRAY, W/O CPA	33472-4032	B-LG	GCP	PLR		M	R	1	2	3	4								SALEABLE			
KEY C, BROWN, W/O CPA	33472-4033	C-BR	GCP	PLR		M	R	1	2	3	4								NOT RECOMMENDED	SEE 33472-4046		
KEY D, GREEN, W/O CPA	33472-4034	D-GR	GCP	PLR		M	R	1	2	3	4								NOT RECOMMENDED	SEE 33472-4047		
KEY A, BLACK, W/O CPA	33472-4101	A-BLK	GCLO	PLR		M	R												SALEABLE			
KEY B, LIGHT GRAY, W/O CPA	33472-4102	B-LG	GCLO	PLR		M	R												SALEABLE			
KEY C, DARK GRAY, W/O CPA	33472-4103	C-DG	GCLO	PLR		M	R												SALEABLE			
KEY D, STONE GRAY, W/O CPA	33472-4104	D-SG	GCLO	PLR		M	R												SALEABLE			
KEY A, BLACK, W/CPA	33472-4105	A-BLK	GCLO	PLR	CPA	M	R												SALEABLE			
KEY B, LIGHT GRAY, W/CPA	33472-4106	B-LG	GCLO	PLR	CPA	M	R												SALEABLE			
KEY C, DARK GRAY, W/CPA	33472-4107	C-DG	GCLO	PLR	CPA	M	R												SALEABLE			
KEY D, STONE GRAY, W/CPA	33472-4108	D-SG	GCLO	PLR	CPA	M	R												SALEABLE			
KEY A, BLACK, W/O CPA	33472-4109	A-BLK	GCLP	PLR		M	R	1	2	3	4								SALEABLE			
KEY B, LIGHT GRAY, W/O CPA	33472-4110	B-LG	GCLP	PLR		M	R	1	2	3	4								SALEABLE			
KEY C, DARK GRAY, W/O CPA	33472-4111	C-DG	GCLP	PLR		M	R	1	2	3	4								SALEABLE			
KEY D, STONE GRAY, W/O CPA	33472-4112	D-SG	GCLP	PLR		M	R	1	2	3	4								SALEABLE			
OBSOLETE	33472-4113																		OBSOLETE			
OBSOLETE	33472-4114																		OBSOLETE			
OBSOLETE	33472-4115																		OBSOLETE			
OBSOLETE	33472-4116																		OBSOLETE			
OBSOLETE	33472-4117																		OBSOLETE			
KEY A, BLACK, W/O CPA	33472-4035	A-BLK	GCP	PLR		M	R		2	3									SALEABLE			
KEY A, BLACK, W/O CPA	33472-4036	A-BLK	GCP	PLR		M	R	1	2	3									SALEABLE			
KEY A, BLACK, W/O CPA	33472-4037	A-BLK	GCP	PLR		M	R			3	4								SALEABLE			
KEY A, BLACK, W/O CPA	33472-4038	A-BLK	GCP	PLR		M	R			3									SALEABLE			
KEY A, BLACK, W/O CPA	33472-4039	A-BLK	GCP	PLR		M	R				4								SALEABLE			

MX150 RECEPTACLE 2X2 SEALED ASSEMBLY MAT SEAL
BOM AND PIN OUT SHEET

ASSEMBLY DESCRIPTION	ASSEMBLY PART NUMBER	COMPONENT						BLOCKED TERMINALS											STATUS	COMMENTS	OPTIONAL ATTATCHMENTS SOLD SEPERATELY	
		THE PRESENCE OF AN ABBREVIATION INDICATES THE PRESENCE OF THAT COMPONENT.						CAVITY WITH A NUMBER INDICATES BLOCKED TERMINAL POSITION CAVITY WITHOUT A NUMBER INDICATES OPEN TERMINAL POSITION														
		HOUSING KEY/COLOR	GROMMET CAP	PLR	CPA	MAT SEAL	RING SEAL	1	2	3	4										BACKSHELL WITH RIBS	BACKSHELL WITHOUT RIBS
KEY A, BLACK, W/O CPA	33472-4040	A-BLK	GCP	PLR		M	R		2										SALEABLE			
KEY A, BLACK, W/O CPA	33472-4041	A-BLK	GCP	PLR		M	R	1	2										SALEABLE			
KEY C, DARK GRAY, W/O CPA	33472-4042	C-DG	GCO	PLR		M	R												SALEABLE			
KEY D, STONE GRAY, W/O CPA	33472-4043	D-SG	GCO	PLR		M	R												SALEABLE			
KEY C, DARK GRAY, W/CPA	33472-4044	C-DG	GCO	PLR	CPA	M	R												SALEABLE			
KEY D, STONE GRAY, W/CPA	33472-4045	D-SG	GCO	PLR	CPA	M	R												SALEABLE			
KEY C, DARK GRAY, W/O CPA	33472-4046	C-DG	GCP	PLR		M	R	1	2	3	4								SALEABLE			
KEY D, STONE GRAY, W/O CPA	33472-4047	D-SG	GCP	PLR		M	R	1	2	3	4								SALEABLE			
KEY A, BLACK, W/O CPA	33472-4048	A-BLK	GCP	PLR		M	R		2		4								SALEABLE			
KEY A, BLACK, W/CPA	33472-4049	A-BLK	GCP	PLR	CPA	M	R		2										SALEABLE			
KEY A, BLACK, W/CPA	33472-4050	A-BLK	GCP	PLR	CPA	M	R			3									SALEABLE			
KEY A, BLACK, W/CPA	33472-4051	A-BLK	GCP	PLR	CPA	M	R				4								SALEABLE			
KEY A, BLACK, W/O CPA	33472-4052	A-BLK	GCP	PLR		M	R		2		4								SALEABLE			
KEY A, YELLOW, W/CPA	33472-4053	A-YW	GCO	PLR	CPA	M	R												SALEABLE			
KEY A, BLACK, W/O CPA	33472-4054	A-BLK	GCP	PLR		M	R	1		3									SALEABLE			
KEY B, LIGHT GRAY, W/CPA	33472-4055	B-LG	GCP	PLR	CPA	M	R	1											SALEABLE			
KEY A, BLACK, W/O CPA	33472-4056	A-BLK	GCP	PLR		M	R	1											SALEABLE			
KEY A, BLACK, W/CPA	33472-4057	A-BLK	GCP	PLR	CPA	M	R	1	2	3	4								SALEABLE			
KEY A, BLACK, W/CPA	33472-4058	A-BLK	GCP	PLR	CPA	M	R		2	3									SALEABLE			
KEY A, BLACK, W/O CPA	33472-4059	A-BLK	GCP	PLR		M	R	1			4								SALEABLE			
KEY B, LIGHT GRAY, W/O CPA	33472-4060	B-LG	GCP	PLR		M	R		2		4								SALEABLE			
KEY A, BLACK, WITH CLIPSLOT, W/O CPA	33472-0501	A-BLK-CLIP	GCO	PLR		M	R												DESIGN RELEASE			
KEY B, LIGHT GRAY, WITH CLIPSLOT, W/O CPA	33472-0502	B-LG-CLIP	GCO	PLR		M	R												DESIGN RELEASE			
KEY C, DARK GRAY, WITH CLIPSLOT, W/O CPA	33472-0503	C-DG-CLIP	GCO	PLR		M	R												DESIGN RELEASE			
KEY D, STONE GRAY, WITH CLIPSLOT, W/O CPA	33472-0504	D-SG-CLIP	GCO	PLR		M	R												DESIGN RELEASE			
KEY A, YELLOW, WITH CLIPSLOT, W/O CPA	33472-0505	A-YW-CLIP	GCO	PLR		M	R												DESIGN RELEASE			
KEY A, BLACK, WITH CLIPSLOT, W/CPA	33472-0506	A-BLK-CLIP	GCO	PLR	CPA	M	R												DESIGN RELEASE			
KEY B, LIGHT GRAY, WITH CLIPSLOT, W/CPA	33472-0507	B-LG-CLIP	GCO	PLR	CPA	M	R												DESIGN RELEASE			
KEY C, DARK GRAY, WITH CLIPSLOT, W/CPA	33472-0508	C-DG-CLIP	GCO	PLR	CPA	M	R												DESIGN RELEASE			
KEY D, STONE GRAY, WITH CLIPSLOT, W/CPA	33472-0509	D-SG-CLIP	GCO	PLR	CPA	M	R												DESIGN RELEASE			
KEY A, YELLOW, WITH CLIPSLOT, W/CPA	33472-0510	A-YW-CLIP	GCO	PLR	CPA	M	R												DESIGN RELEASE			

molex

MX150 RECEPTACLE 2X3 SEALED ASSEMBLY MAT SEAL
BOM AND PIN OUT SHEET

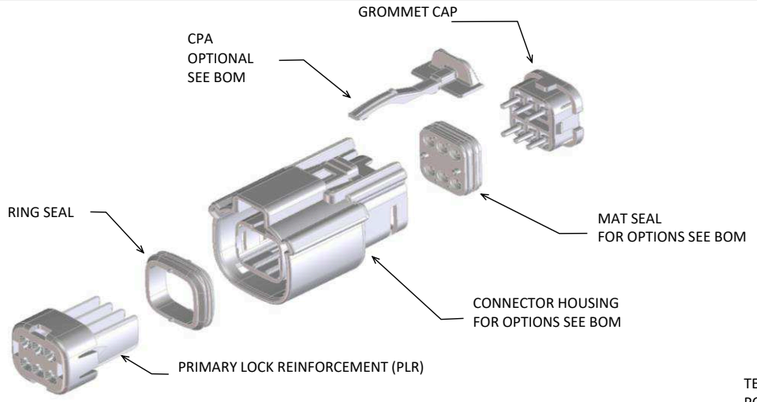

FOR ADDITIONAL INFORMATION SEE SD-33472-0001

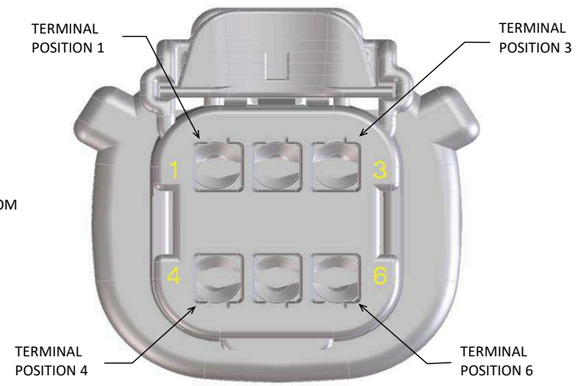

ABBREVIATION	DESCRIPTION	COLOR	MATERIAL
A-BLK	HOUSING, KEYING OPTION A	BLACK	SPS/NYLON GF20
B-LG	HOUSING, KEYING OPTION B	LIGHT GRAY	SPS/NYLON GF20
C-BR	HOUSING, KEYING OPTION C	BROWN	SPS/NYLON GF20
D-GR	HOUSING, KEYING OPTION D	GREEN	SPS/NYLON GF20
C-DG	HOUSING, KEYING OPTION C	DARK GRAY	SPS/NYLON GF20
D-SG	HOUSING, KEYING OPTION D	STONE GRAY	SPS/NYLON GF20
A-YW	HOUSING, KEYING OPTION A	YELLOW	SPS/NYLON GF20
A-BLK-CLIP	HOUSING, KEYING OPTION A WITH CLIPSLOT	BLACK	SPS/NYLON GF20
B-LG-CLIP	HOUSING, KEYING OPTION B WITH CLIPSLOT	LIGHT GRAY	SPS/NYLON GF20
C-BR-CLIP	HOUSING, KEYING OPTION C WITH CLIPSLOT	BROWN	SPS/NYLON GF20
D-GR-CLIP	HOUSING, KEYING OPTION D WITH CLIPSLOT	GREEN	SPS/NYLON GF20
C-DG-CLIP	HOUSING, KEYING OPTION C WITH CLIPSLOT	DARK GRAY	SPS/NYLON GF20
D-SG-CLIP	HOUSING, KEYING OPTION D WITH CLIPSLOT	STONE GRAY	SPS/NYLON GF20
A-SG-CLIP	HOUSING, KEYING OPTION A WITH CLIPSLOT	YELLOW	SPS/NYLON GF20
GC	GROMMET CAP	BLACK	SPS/NYLON GF20
PLR	PLR	NATURAL	SPS/NYLON GF20
CPA	CPA	RED	PBT GF30
M	MAT SEAL	LIGHT BLUE	INHERENTLY LUBRICATED SILICONE
R	RING SEAL	RUST RED	INHERENTLY LUBRICATED SILICONE

ASSEMBLY DESCRIPTION	ASSEMBLY PART NUMBER	COMPONENT						BLOCKED TERMINALS						STATUS	COMMENTS	OPTIONAL ATTATCHMENTS SOLD SEPERATELY	
		THE PRESENCE OF AN ABBREVIATION INDICATES THE PRESENCE OF THAT COMPONENT.						CAVITY WITH A NUMBER INDICATES BLOCKED TERMINAL POSITION CAVITY WITHOUT A NUMBER INDICATES OPEN TERMINAL POSITION									
		HOUSING KEY/COLOR	GROMMET CAP	PLR	CPA	MAT SEAL	RING SEAL	1	2	3	4	5	6			BACKSHELL WITH RIBS	BACKSHELL WITHOUT RIBS
KEY A, BLACK, W/O CPA	33472-0601	A-BLK	GC	PLR		M	R							SALEABLE		34951-0610	34951-0620
KEY B, LIGHT GRAY, W/O CPA	33472-0602	B-LG	GC	PLR		M	R							SALEABLE		34951-0610	34951-0620
KEY C, BROWN, W/O CPA	33472-0603	C-BR	GC	PLR		M	R							NOT RECOMMENDED	SEE P/N 33472-0668	34951-0610	34951-0620
KEY D, GREEN, W/O CPA	33472-0604	D-GR	GC	PLR		M	R							NOT RECOMMENDED	SEE P/N 33472-0669	34951-0610	34951-0620
VOID KEY	33472-0605																
KEY A, BLACK, W/CPA	33472-0606	A-BLK	GC	PLR	CPA	M	R							SALEABLE		34951-0610	34951-0620
KEY B, LIGHT GRAY, W/CPA	33472-0607	B-LG	GC	PLR	CPA	M	R							SALEABLE		34951-0610	34951-0620
KEY C, BROWN, W/CPA	33472-0608	C-BR	GC	PLR	CPA	M	R							NOT RECOMMENDED	SEE P/N 33472-0670	34951-0610	34951-0620
KEY D, GREEN, W/CPA	33472-0609	D-GR	GC	PLR	CPA	M	R							NOT RECOMMENDED	SEE P/N 33472-0671	34951-0610	34951-0620
VOID KEY	33472-0610																
KEY A, BLACK, W/O CPA	33472-0611	A-BLK	GC	PLR		M	R			3				SALEABLE	SAME AS P/N 33472-0658	34951-0610	34951-0620
KEY B, LIGHT GRAY, W/O CPA	33472-0612	B-LG	GC	PLR		M	R			3				SALEABLE		34951-0610	34951-0620
KEY C, BROWN, W/O CPA	33472-0613	C-BR	GC	PLR		M	R			3				NOT RECOMMENDED		34951-0610	34951-0620
KEY D, GREEN, W/O CPA	33472-0614	D-GR	GC	PLR		M	R			3				NOT RECOMMENDED		34951-0610	34951-0620
VOID KEY	33472-0615																
KEY A, BLACK, W/CPA	33472-0616	A-BLK	GC	PLR	CPA	M	R			3				SALEABLE		34951-0610	34951-0620
KEY B, LIGHT GRAY, W/CPA	33472-0617	B-LG	GC	PLR	CPA	M	R			3				SALEABLE		34951-0610	34951-0620
KEY C, BROWN, W/CPA	33472-0618	C-BR	GC	PLR	CPA	M	R			3				NOT RECOMMENDED		34951-0610	34951-0620
KEY D, GREEN, W/CPA	33472-0619	D-GR	GC	PLR	CPA	M	R			3				NOT RECOMMENDED		34951-0610	34951-0620
VOID KEY	33472-0620																
KEY A, BLACK, W/O CPA	33472-0621	A-BLK	GC	PLR		M	R			3	4			SALEABLE		34951-0610	34951-0620
KEY B, LIGHT GRAY, W/O CPA	33472-0622	B-LG	GC	PLR		M	R			3	4			SALEABLE		34951-0610	34951-0620
KEY C, BROWN, W/O CPA	33472-0623	C-BR	GC	PLR		M	R			3	4			NOT RECOMMENDED		34951-0610	34951-0620
KEY D, GREEN, W/O CPA	33472-0624	D-GR	GC	PLR		M	R			3	4			NOT RECOMMENDED		34951-0610	34951-0620
VOID KEY	33472-0625																
KEY A, BLACK, W/CPA	33472-0626	A-BLK	GC	PLR	CPA	M	R			3	4			SALEABLE		34951-0610	34951-0620
KEY B, LIGHT GRAY, W/CPA	33472-0627	B-LG	GC	PLR	CPA	M	R			3	4			SALEABLE		34951-0610	34951-0620
KEY C, BROWN, W/CPA	33472-0628	C-BR	GC	PLR	CPA	M	R			3	4			NOT RECOMMENDED		34951-0610	34951-0620
KEY D, GREEN, W/CPA	33472-0629	D-GR	GC	PLR	CPA	M	R			3	4			NOT RECOMMENDED		34951-0610	34951-0620
VOID KEY	33472-0630																
KEY A, BLACK, W/O CPA, W/O MAT SEAL	33472-0631	A-BLK	GC	PLR			R							PLANNED OBSOLESCENCE	NOT VALIDATED	34951-0610	34951-0620
KEY B, LIGHT GRAY, W/O CPA, W/O MAT SEAL	33472-0632	B-LG	GC	PLR			R							PLANNED OBSOLESCENCE	NOT VALIDATED	34951-0610	34951-0620
KEY C, BROWN, W/O CPA, W/O MAT SEAL	33472-0633	C-BR	GC	PLR			R							PLANNED OBSOLESCENCE	NOT VALIDATED	34951-0610	34951-0620
KEY D, GREEN, W/O CPA, W/O MAT SEAL	33472-0634	D-GR	GC	PLR			R							PLANNED OBSOLESCENCE	NOT VALIDATED	34951-0610	34951-0620
VOID KEY	33472-0635																
KEY A, BLACK, W/O CPA	33472-0636	A-BLK	GC	PLR		M	R	1	2	3	4	5	6	SALEABLE		34951-0610	34951-0620
KEY B, LIGHT GRAY, W/O CPA	33472-0637	B-LG	GC	PLR		M	R	1	2	3	4	5	6	SALEABLE		34951-0610	34951-0620
KEY C, BROWN, W/O CPA	33472-0638	C-BR	GC	PLR		M	R	1	2	3	4	5	6	NOT RECOMMENDED	SEE P/N 33472-0749	34951-0610	34951-0620
KEY D, GREEN, W/O CPA	33472-0639	D-GR	GC	PLR		M	R	1	2	3	4	5	6	NOT RECOMMENDED	SEE P/N 33472-0750	34951-0610	34951-0620
VOID KEY	33472-0640																
KEY A, BLACK, W/O CPA	33472-0641	A-BLK	GC	PLR		M	R		2	3	4	5		SALEABLE		34951-0610	34951-0620
KEY A, BLACK, W/O CPA	33472-0642	A-BLK	GC	PLR		M	R				4			SALEABLE		34951-0610	34951-0620
KEY A, BLACK, W/CPA	33472-0643	A-BLK	GC	PLR	CPA	M	R	1		3	4			SALEABLE		34951-0610	34951-0620
KEY B, LIGHT GRAY, W/CPA	33472-0644	B-LG	GC	PLR	CPA	M	R	1		3	4			SALEABLE		34951-0610	34951-0620
KEY C, BROWN, W/CPA	33472-0645	C-BR	GC	PLR	CPA	M	R	1		3	4			NOT RECOMMENDED		34951-0610	34951-0620
KEY D, GREEN, W/CPA	33472-0646	D-GR	GC	PLR	CPA	M	R	1		3	4			NOT RECOMMENDED		34951-0610	34951-0620
VOID KEY	33472-0647																
KEY A, BLACK, W/O CPA	33472-0648	A-BLK	GC	PLR		M	R	1		3	4		6	SALEABLE		34951-0610	34951-0620
KEY B, LIGHT GRAY, W/O CPA	33472-0649	B-LG	GC	PLR		M	R	1		3	4		6	SALEABLE		34951-0610	34951-0620
KEY C, BROWN, W/O CPA	33472-0650	C-BR	GC	PLR		M	R	1		3	4		6	NOT RECOMMENDED		34951-0610	34951-0620
KEY D, GREEN, W/O CPA	33472-0651	D-GR	GC	PLR		M	R	1		3	4		6	NOT RECOMMENDED		34951-0610	34951-0620
VOID KEY	33472-0652																
KEY A, BLACK, W/CPA	33472-0653	A-BLK	GC	PLR	CPA	M	R	1		3	4		6	SALEABLE		34951-0610	34951-0620
KEY B, LIGHT GRAY, W/CPA	33472-0654	B-LG	GC	PLR	CPA	M	R	1		3	4		6	SALEABLE		34951-0610	34951-0620

molex

MX150 RECEPTACLE 2X3 SEALED ASSEMBLY MAT SEAL
BOM AND PIN OUT SHEET

ASSEMBLY DESCRIPTION	ASSEMBLY PART NUMBER	COMPONENT						BLOCKED TERMINALS						STATUS	COMMENTS	OPTIONAL ATTATCHMENTS SOLD SEPERATELY	
		THE PRESENCE OF AN ABBREVIATION INDICATES THE PRESENCE OF THAT COMPONENT.						CAVITY WITH A NUMBER INDICATES BLOCKED TERMINAL POSITION CAVITY WITHOUT A NUMBER INDICATES OPEN TERMINAL POSITION									
		HOUSING KEY/COLOR	GROMMET CAP	PLR	CPA	MAT SEAL	RING SEAL	1	2	3	4	5	6			BACKSHELL WITH RIBS	BACKSHELL WITHOUT RIBS
KEY C, BROWN, W/CPA	33472-0655	C-BR	GC	PLR	CPA	M	R	1		3	4		6	NOT RECOMMENDED		34951-0610	34951-0620
KEY D, GREEN, W/CPA	33472-0656	D-GR	GC	PLR	CPA	M	R	1		3	4		6	NOT RECOMMENDED		34951-0610	34951-0620
VOID KEY	33472-0657																
KEY A, BLACK, W/O CPA	33472-0658	A-BLK	GC	PLR		M	R			3				SALEABLE		34951-0610	34951-0620
KEY A, BLACK, W/O CPA	33472-0659	A-BLK	GC	PLR		M	R			3		5	6	SALEABLE		34951-0610	34951-0620
KEY A, BLACK, W/CPA	33472-0660	A-BLK	GC	PLR	CPA	M	R	1	2	3	4	5	6	SALEABLE		34951-0610	34951-0620
KEY A, BLACK, W/O CPA	33472-0661	A-BLK	GC	PLR		M	R		2					SALEABLE		34951-0610	34951-0620
KEY A, BLACK, W/O CPA	33472-0662	A-BLK	GC	PLR		M	R		2			5		SALEABLE		34951-0610	34951-0620
KEY A, BLACK, W/O CPA	33472-0663	A-BLK	GC	PLR		M	R					5	6	SALEABLE		34951-0610	34951-0620
KEY A, BLACK, W/O CPA	33472-0664	A-BLK	GC	PLR		M	R				4	5	6	SALEABLE		34951-0610	34951-0620
KEY A, BLACK, W/O CPA	33472-0665	A-BLK	GC	PLR		M	R	1						SALEABLE		34951-0610	34951-0620
KEY A, BLACK, W/O CPA	33472-0666	A-BLK	GC	PLR		M	R		2			5	6	SALEABLE		34951-0610	34951-0620
KEY A, BLACK, W/O CPA	33472-0667	A-BLK	GC	PLR		M	R	1		3		5	6	SALEABLE		34951-0610	34951-0620
KEY C, DARK GRAY, W/O CPA	33472-0668	C-DG	GC	PLR		M	R							SALEABLE		34951-0610	34951-0620
KEY D, STONE GRAY, W/O CPA	33472-0669	D-SG	GC	PLR		M	R							SALEABLE		34951-0610	34951-0620
KEY C, DARK GRAY, W/CPA	33472-0670	C-DG	GC	PLR	CPA	M	R							SALEABLE		34951-0610	34951-0620
KEY D, STONE GRAY, W/CPA	33472-0671	D-SG	GC	PLR	CPA	M	R							SALEABLE		34951-0610	34951-0620
KEY B, LIGHT GRAY, W/O CPA	33472-0672	B-LG	GC	PLR		M	R					5		SALEABLE		34951-0610	34951-0620
KEY A, BLACK, W/O CPA	33472-0673	A-BLK	GC	PLR		M	R						6	SALEABLE		34951-0610	34951-0620
KEY A, BLACK, W/CPA	33472-0674	A-BLK	GC	PLR	CPA	M	R					5	6	SALEABLE		34951-0610	34951-0620
KEY A, BLACK, W/CPA	33472-0675	A-BLK	GC	PLR	CPA	M	R						6	SALEABLE		34951-0610	34951-0620
KEY B, LIGHT GRAY, W/CPA	33472-0676	B-LG	GC	PLR	CPA	M	R	1				5		SALEABLE		34951-0610	34951-0620
KEY B, LIGHT GRAY, W/O CPA	33472-0677	B-LG	GC	PLR		M	R	1				5		SALEABLE		34951-0610	34951-0620
KEY B, LIGHT GRAY, W/O CPA	33472-0678	B-LG	GC	PLR		M	R					5	6	SALEABLE		34951-0610	34951-0620
KEY A, BLACK, W/CPA	33472-0679	A-BLK	GC	PLR	CPA	M	R	1	2	3				SALEABLE		34951-0610	34951-0620
KEY A, BLACK, W/O CPA	33472-0680	A-BLK	GC	PLR		M	R	1	2	3				SALEABLE		34951-0610	34951-0620
KEY A, BLACK, W/CPA	33472-0681	A-BLK	GC	PLR	CPA	M	R		2					SALEABLE		34951-0610	34951-0620
KEY A, YELLOW, W/CPA	33472-0682	A-YW	GC	PLR	CPA	M	R							SALEABLE		34951-0610	34951-0620
KEY A, BLACK, W/O CPA	33472-0683	A-BLK	GC	PLR		M	R			3	4	5	6	SALEABLE		34951-0610	34951-0620
KEY A, BLACK, W/CPA	33472-0684	A-BLK	GC	PLR	CPA	M	R		2	3				SALEABLE		34951-0610	34951-0620
KEY B, LIGHT GRAY, W/CPA	33472-0685	B-LG	GC	PLR	CPA	M	R	1	2	3	4	5	6	SALEABLE		34951-0610	34951-0620
KEY B, LIGHT GRAY, W/CPA	33472-0686	B-LG	GC	PLR	CPA	M	R		2	3				SALEABLE		34951-0610	34951-0620
KEY A, BLACK, W/O CPA	33472-0687	A-BLK	GC	PLR		M	R	1		3	4			SALEABLE		34951-0610	34951-0620
KEY A, BLACK, W/CPA	33472-0688	A-BLK	GC	PLR	CPA	M	R				4	5	6	SALEABLE		34951-0610	34951-0620
KEY A, BLACK, W/CPA	33472-0689	A-BLK	GC	PLR	CPA	M	R				4			SALEABLE		34951-0610	34951-0620
KEY B, LIGHT GRAY, W/CPA	33472-0690	B-LG	GC	PLR	CPA	M	R				4			SALEABLE		34951-0610	34951-0620
KEY A, BLACK, W/CPA	33472-0691	A-BLK	GC	PLR	CPA	M	R	1		3		5		SALEABLE		34951-0610	34951-0620
KEY A, BLACK, W/CPA	33472-0692	A-BLK	GC	PLR	CPA	M	R		2		4		6	SALEABLE		34951-0610	34951-0620
KEY A, BLACK, WITH CLIPSLOT, W/O CPA	33472-0701	A-BLK-CLIP	GC	PLR		M	R							SALEABLE		N/A	N/A
KEY B, LIGHT GRAY, WITH CLIPSLOT, W/O CPA	33472-0702	B-LG-CLIP	GC	PLR		M	R							SALEABLE		N/A	N/A
KEY C, BROWN, WITH CLIPSLOT, W/O CPA	33472-0703	C-BR-CLIP	GC	PLR		M	R							NOT RECOMMENDED--SEE P/N 33472-0714		N/A	N/A
KEY D, GREEN, WITH CLIPSLOT, W/O CPA	33472-0704	D-GR-CLIP	GC	PLR		M	R							NOT RECOMMENDED--SEE P/N 33472-0715		N/A	N/A
KEY A, BLACK, WITH CLIPSLOT, W/CPA	33472-0705	A-BLK-CLIP	GC	PLR	CPA	M	R							SALEABLE		N/A	N/A
KEY B, LIGHT GRAY, WITH CLIPSLOT, W/CPA	33472-0706	B-LG-CLIP	GC	PLR	CPA	M	R							SALEABLE		N/A	N/A
KEY C, BROWN, WITH CLIPSLOT, W/CPA	33472-0707	C-BR-CLIP	GC	PLR	CPA	M	R							NOT RECOMMENDED--SEE P/N 33472-0716		N/A	N/A
KEY D, GREEN, WITH CLIPSLOT, W/CPA	33472-0708	D-GR-CLIP	GC	PLR	CPA	M	R							NOT RECOMMENDED--SEE P/N 33472-0717		N/A	N/A
KEY A, BLACK, WITH CLIPSLOT, W/O CPA	33472-0709	A-BLK-CLIP	GC	PLR		M	R			3				SALEABLE		N/A	N/A
KEY A, BLACK, WITH CLIPSLOT, W/O CPA	33472-0710	A-BLK-CLIP	GC	PLR		M	R		2	3	4	5		SALEABLE		N/A	N/A
KEY A, BLACK, WITH CLIPSLOT, W/O CPA	33472-0711	A-BLK-CLIP	GC	PLR		M	R					5	6	SALEABLE		N/A	N/A
KEY A, BLACK, WITH CLIPSLOT, W/O CPA	33472-0712	A-BLK-CLIP	GC	PLR		M	R			3	4			SALEABLE		N/A	N/A
KEY B, LIGHT GRAY, WITH CLIPSLOT, W/O CPA	33472-0713	B-LG-CLIP	GC	PLR		M	R	1				5		SALEABLE		N/A	N/A
KEY C, DARK GRAY, WITH CLIPSLOT, W/O CPA	33472-0714	C-DG-CLIP	GC	PLR		M	R							SALEABLE		N/A	N/A
KEY D, STONE GRAY, WITH CLIPSLOT, W/O CPA	33472-0715	D-SG-CLIP	GC	PLR		M	R							SALEABLE		N/A	N/A
KEY C, DARK GRAY, WITH CLIPSLOT, W/CPA	33472-0716	C-DG-CLIP	GC	PLR	CPA	M	R							SALEABLE		N/A	N/A
KEY D, STONE GRAY, WITH CLIPSLOT, W/CPA	33472-0717	D-SG-CLIP	GC	PLR	CPA	M	R							SALEABLE		N/A	N/A
KEY A, BLACK, WITH CLIPSLOT, W/O CPA	33472-0718	A-BLK-CLIP	GC	PLR		M	R			3			6	SALEABLE		N/A	N/A
KEY B, LIGHT GRAY, WITH CLIPSLOT, W/CPA	33472-0719	B-LG-CLIP	GC	PLR	CPA	M	R	1				5		SALEABLE		N/A	N/A
KEY B, LIGHT GRAY, WITH CLIPSLOT, W/O CPA	33472-0720	B-LG-CLIP	GC	PLR		M	R					5		SALEABLE		N/A	N/A
KEY C, DARK GRAY, WITH CLIPSLOT, W/O CPA	33472-0721	C-DG-CLIP	GC	PLR		M	R			3				SALEABLE		N/A	N/A
KEY A, BLACK, WITH CLIPSLOT, W/O CPA	33472-0722	A-BLK-CLIP	GC	PLR		M	R				4	5	6	SALEABLE		N/A	N/A
KEY A, BLACK, WITH CLIPSLOT, W/O CPA	33472-0723	A-BLK-CLIP	GC	PLR		M	R		2	3		5	6	SALEABLE		N/A	N/A
KEY A, BLACK, WITH CLIPSLOT, W/O CPA	33472-0724	A-BLK-CLIP	GC	PLR		M	R		2				6	SALEABLE		N/A	N/A
KEY A, BLACK, WITH CLIPSLOT, W/O CPA	33472-0725	A-BLK-CLIP	GC	PLR		M	R			3		5	6	SALEABLE		N/A	N/A
KEY A, BLACK, WITH CLIPSLOT, W/O CPA	33472-0726	A-BLK-CLIP	GC	PLR		M	R						6	SALEABLE		N/A	N/A
KEY A, BLACK, WITH CLIPSLOT, W/O CPA	33472-0727	A-BLK-CLIP	GC	PLR		M	R		2	3	4	5	6	SALEABLE		N/A	N/A
KEY A, BLACK, WITH CLIPSLOT, W/O CPA	33472-0728	A-BLK-CLIP	GC	PLR		M	R	1					6	SALEABLE		N/A	N/A
KEY A, BLACK, WITH CLIPSLOT, W/O CPA	33472-0729	A-BLK-CLIP	GC	PLR		M	R	1	2	3	4	5	6	SALEABLE		N/A	N/A
KEY A, BLACK, WITH CLIPSLOT, W/O CPA	33472-0730	A-BLK-CLIP	GC	PLR		M	R				4			SALEABLE		N/A	N/A
KEY A, BLACK, WITH CLIPSLOT, W/O CPA	33472-0731	A-BLK-CLIP	GC	PLR		M	R				4		6	SALEABLE		N/A	N/A
KEY B, LIGHT GRAY, WITH CLIPSLOT, W/O CPA	33472-0732	B-LG-CLIP	GC	PLR		M	R				4	5	6	SALEABLE		N/A	N/A
KEY A, BLACK, W/CPA	33472-0733	A-BLK	GC	PLR	CPA	M	R		2			5		SALEABLE		34951-0610	34951-0620
KEY A, BLACK, WITH CLIPSLOT, W/O CPA	33472-0734	A-BLK-CLIP	GC	PLR		M	R					5		SALEABLE		N/A	N/A
KEY A, BLACK, W/O CPA	33472-0735	A-BLK	GC	PLR		M	R					5		SALEABLE		34951-0610	34951-0620
KEY B, LIGHT GRAY, W/O CPA	33472-0736	B-LG	GC	PLR		M	R				4	5	6	SALEABLE		34951-0610	34951-0620
KEY A, BLACK, W/CPA	33472-0737	A-BLK	GC	PLR	CPA	M	R	1						SALEABLE		34951-0610	34951-0620
KEY B, LIGHT GRAY, W/CPA	33472-0738	B-LG	GC	PLR	CPA	M	R	1						SALEABLE		34951-0610	34951-0620
KEY A, BLACK, WITH CLIPSLOT, W/CPA	33472-0739	A-BLK-CLIP	GC	PLR	CPA	M	R	1	2			5	6	SALEABLE		N/A	N/A
KEY A, BLACK, WITH CLIPSLOT, W/CPA	33472-0740	A-BLK-CLIP	GC	PLR	CPA	M	R		2	3	4	5		SALEABLE		N/A	N/A
KEY A, BLACK, W/O CPA	33472-0741	A-BLK	GC	PLR		M	R			3			6	SALEABLE		34951-0610	34951-0620
KEY A, BLACK, W/O CPA	33472-0742	A-BLK	GC	PLR		M	R	1				5	6	SALEABLE		34951-0610	34951-0620
KEY B, LIGHT GRAY, W/O CPA	33472-0743	B-LG	GC	PLR		M	R	1				5	6	SALEABLE		34951-0610	34951-0620

MX150 RECEPTACLE 2X3 SEALED ASSEMBLY MAT SEAL
BOM AND PIN OUT SHEET

ASSEMBLY DESCRIPTION	ASSEMBLY PART NUMBER	COMPONENT						BLOCKED TERMINALS						STATUS	COMMENTS	OPTIONAL ATTATCHMENTS SOLD SEPERATELY	
		THE PRESENCE OF AN ABBREVIATION INDICATES THE PRESENCE OF THAT COMPONENT.						CAVITY WITH A NUMBER INDICATES BLOCKED TERMINAL POSITION CAVITY WITHOUT A NUMBER INDICATES OPEN TERMINAL POSITION									
		HOUSING KEY/COLOR	GROMMET CAP	PLR	CPA	MAT SEAL	RING SEAL	1	2	3	4	5	6			BACKSHELL WITH RIBS	BACKSHELL WITHOUT RIBS
KEY A, BLACK, WITH CLIPSLOT, W/CPA	33472-0744	A-BLK-CLIP	GC	PLR	CPA	M	R			3				SALEABLE		N/A	N/A
KEY A, BLACK, WITH CLIPSLOT, W/O CPA	33472-0745	A-BLK-CLIP	GC	PLR		M	R	1			4			SALEABLE		N/A	N/A
KEY B, LIGHT GRAY, W/CPA	33472-0746	B-LG	GC	PLR	CPA	M	R				4	5	6	SALEABLE		34951-0610	34951-0620
KEY A, BLACK, W/CPA	33472-0747	A-BLK	GC	PLR	CPA	M	R		2	3	4	5		SALEABLE		34951-0610	34951-0620
KEY C, DARK GRAY, W/O CPA	33472-0748	C-DG	GC	PLR		M	R						6	SALEABLE		34951-0610	34951-0620
KEY C, DARK GRAY, W/O CPA	33472-0749	C-DG	GC	PLR		M	R	1	2	3	4	5	6	SALEABLE		34951-0610	34951-0620
KEY D, STONE GRAY, W/O CPA	33472-0750	D-SG	GC	PLR		M	R	1	2	3	4	5	6	SALEABLE		34951-0610	34951-0620
KEY A, BLACK, W/O CPA	33472-0751	A-BLK	GC	PLR		M	R		2	3				SALEABLE		34951-0610	34951-0620
KEY A, BLACK, WITH CLIPSLOT, W/CPA	33472-0752	A-BLK-CLIP	GC	PLR	CPA	M	R	1				5	6	SALEABLE		N/A	N/A
KEY A, BLACK, WITH CLIPSLOT, W/CPA	33472-0753	A-BLK-CLIP	GC	PLR	CPA	M	R						6	SALEABLE		N/A	N/A
KEY A, BLACK, W/CPA	33472-0754	A-BLK	GC	PLR	CPA	M	R					5		SALEABLE		34951-0610	34951-0620
KEY A, BLACK, WITH CLIPSLOT, W/CPA	33472-0755	A-BLK-CLIP	GC	PLR	CPA	M	R					5	6	SALEABLE		N/A	N/A
KEY A, BLACK, W/CPA	33472-0756	A-BLK	GC	PLR	CPA	M	R	1	2	3	4			SALEABLE		34951-0610	34951-0620
KEY B, LIGHT GRAY, W/O CPA	33472-0757	B-LG	GC	PLR		M	R	1						SALEABLE		34951-0610	34951-0620
KEY A, BLACK, WITH CLIPSLOT, W/O CPA	33472-7001	A-BLK-CLIP	GC	PLR		M	R			3	4		6	SALEABLE		N/A	N/A

molex

MX150 RECEPTACLE 2X4 SEALED ASSEMBLY MAT SEAL
BOM AND PIN OUT SHEET

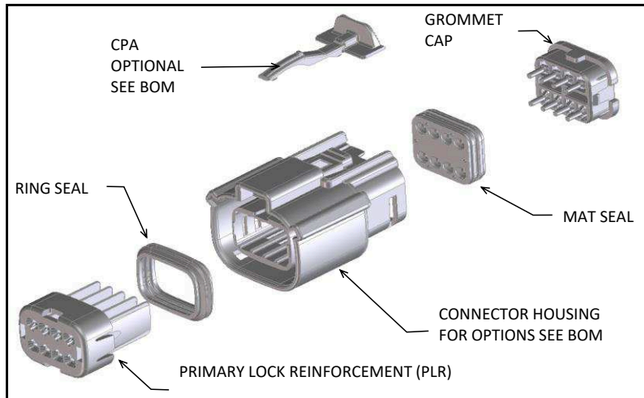

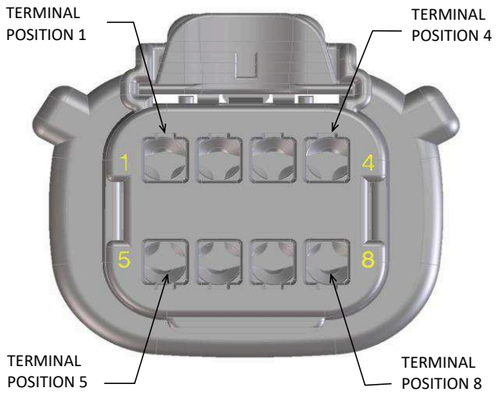

ABBREVIATION	DESCRIPTION	COLOR	MATERIAL
A-BLK	HOUSING, KEYING OPTION A	BLACK	SPS/NYLON GF20
B-LG	HOUSING, KEYING OPTION B	LIGHT GRAY	SPS/NYLON GF20
C-BR	HOUSING, KEYING OPTION C	BROWN	SPS/NYLON GF20
D-GR	HOUSING, KEYING OPTION D	GREEN	SPS/NYLON GF20
C-DG	HOUSING, KEYING OPTION C	DARK GRAY	SPS/NYLON GF20
D-SG	HOUSING, KEYING OPTION D	STONE GRAY	SPS/NYLON GF20
D-BLK	HOUSING, KEYING OPTION D	BLACK	SPS/NYLON GF20
A-YW	HOUSING, KEYING OPTION A	YELLOW	SPS/NYLON GF20
A-BLK-CLIP	HOUSING, KEYING OPTION A WITH CLIPSLOT	BLACK	SPS/NYLON GF20
B-LG-CLIP	HOUSING, KEYING OPTION B WITH CLIPSLOT	LIGHT GRAY	SPS/NYLON GF20
C-BR-CLIP	HOUSING, KEYING OPTION C WITH CLIPSLOT	BROWN	SPS/NYLON GF20
D-GR-CLIP	HOUSING, KEYING OPTION D WITH CLIPSLOT	GREEN	SPS/NYLON GF20
C-DG-CLIP	HOUSING, KEYING OPTION C WITH CLIPSLOT	DARK GRAY	SPS/NYLON GF20
D-SG-CLIP	HOUSING, KEYING OPTION D WITH CLIPSLOT	STONE GRAY	SPS/NYLON GF20
D-BLK-CLIP	HOUSING, KEYING OPTION D WITH CLIPSLOT	BLACK	SPS/NYLON GF20
GCO	GROMMET CAP (OPEN)	BLACK	SPS/NYLON GF20
GCP	GROMMET CAP (PLUGGED)	BLACK	SPS/NYLON GF20
PLR	PLR	NATURAL	SPS/NYLON GF20
CPA	CPA	RED	PBT GF30
M	MAT SEAL	LIGHT BLUE	INHERENTLY LUBRICATED SILICONE
RG	RING SEAL	GREEN	INHERENTLY LUBRICATED SILICONE
RR	RING SEAL	RUST RED	INHERENTLY LUBRICATED SILICONE

FOR ADDITIONAL INFORMATION SEE SD-33472-0001

ASSEMBLY DESCRIPTION	ASSEMBLY PART NUMBER	COMPONENT						BLOCKED TERMINALS								STATUS	COMMENTS	OPTIONAL ATTATCHMENTS SOLD SEPERATELY			
		THE PRESENCE OF AN ABBREVIATION INDICATES THE PRESENCE OF THAT COMPONENT.						CAVITY WITH A NUMBER INDICATES BLOCKED TERMINAL POSITION CAVITY WITHOUT A NUMBER INDICATES OPEN TERMINAL POSITION													
		HOUSING KEY/COLOR	GROMMET CAP	PLR	CPA	MAT SEAL	RING SEAL	1	2	3	4	5	6	7	8			BACKSHELL WITH RIBS	BACKSHELL WITHOUT RIBS	90˚ ADAPTOR WITH RIBS	90˚ ADAPTOR WITHOUT RIBS
KEY A, BLACK, W/O CPA	33472-0801	A-BLK	GCO	PLR		M	RG									PLANNED OBSOLESCENCE		N/A	N/A	N/A	N/A
KEY B, LIGHT GRAY, W/O CPA	33472-0802	B-LG	GCO	PLR		M	RG									PLANNED OBSOLESCENCE		N/A	N/A	N/A	N/A
KEY C, BROWN, W/O CPA	33472-0803	C-BR	GCO	PLR		M	RG									PLANNED OBSOLESCENCE	SEE P/N 33472-0879	N/A	N/A	N/A	N/A
KEY D, GREEN, W/O CPA	33472-0804	D-GR	GCO	PLR		M	RG									PLANNED OBSOLESCENCE	SEE P/N 33472-0880	N/A	N/A	N/A	N/A
KEY D, BLACK, W/O CPA	33472-0805	D-BLK	GCO	PLR		M	RG									PLANNED OBSOLESCENCE		N/A	N/A	N/A	N/A
KEY A, BLACK, W/CPA	33472-0806	A-BLK	GCO	PLR	CPA	M	RG									PLANNED OBSOLESCENCE		N/A	N/A	N/A	N/A
KEY B, LIGHT GRAY, W/CPA	33472-0807	B-LG	GCO	PLR	CPA	M	RG									PLANNED OBSOLESCENCE		N/A	N/A	N/A	N/A
KEY C, BROWN, W/CPA	33472-0808	C-BR	GCO	PLR	CPA	M	RG									PLANNED OBSOLESCENCE	SEE P/N 33472-0881	N/A	N/A	N/A	N/A
KEY D, GREEN, W/CPA	33472-0809	D-GR	GCO	PLR	CPA	M	RG									PLANNED OBSOLESCENCE	SEE P/N 33472-0882	N/A	N/A	N/A	N/A
VOID KEY	33472-0810																				
KEY A, BLACK, W/O CPA	33472-0811	A-BLK	GCP	PLR		M	RG				4					PLANNED OBSOLESCENCE		N/A	N/A	N/A	N/A
KEY B, LIGHT GRAY, W/O CPA	33472-0812	B-LG	GCP	PLR		M	RG				4					PLANNED OBSOLESCENCE		N/A	N/A	N/A	N/A
KEY C, BROWN, W/O CPA	33472-0813	C-BR	GCP	PLR		M	RG				4					PLANNED OBSOLESCENCE		N/A	N/A	N/A	N/A
KEY D, GREEN, W/O CPA	33472-0814	D-GR	GCP	PLR		M	RG				4					PLANNED OBSOLESCENCE		N/A	N/A	N/A	N/A
VOID KEY	33472-0815																				
KEY A, BLACK, W/CPA	33472-0816	A-BLK	GCP	PLR	CPA	M	RG				4					PLANNED OBSOLESCENCE		N/A	N/A	N/A	N/A
KEY B, LIGHT GRAY, W/CPA	33472-0817	B-LG	GCP	PLR	CPA	M	RG				4					PLANNED OBSOLESCENCE		N/A	N/A	N/A	N/A
KEY C, BROWN, W/CPA	33472-0818	C-BR	GCP	PLR	CPA	M	RG				4					PLANNED OBSOLESCENCE		N/A	N/A	N/A	N/A
KEY D, GREEN, W/CPA	33472-0819	D-GR	GCP	PLR	CPA	M	RG				4					PLANNED OBSOLESCENCE	SEE P/N 33472-1009	N/A	N/A	N/A	N/A
VOID KEY	33472-0820																				
KEY A, BLACK, W/O CPA	33472-0821	A-BLK	GCP	PLR		M	RG				4	5				PLANNED OBSOLESCENCE		N/A	N/A	N/A	N/A
KEY B, LIGHT GRAY, W/O CPA	33472-0822	B-LG	GCP	PLR		M	RG				4	5				PLANNED OBSOLESCENCE		N/A	N/A	N/A	N/A
KEY C, BROWN, W/O CPA	33472-0823	C-BR	GCP	PLR		M	RG				4	5				PLANNED OBSOLESCENCE		N/A	N/A	N/A	N/A
KEY D, GREEN, W/O CPA	33472-0824	D-GR	GCP	PLR		M	RG				4	5				PLANNED OBSOLESCENCE		N/A	N/A	N/A	N/A
VOID KEY	33472-0825																				
KEY A, BLACK, W/CPA	33472-0826	A-BLK	GCP	PLR	CPA	M	RG				4	5				PLANNED OBSOLESCENCE		N/A	N/A	N/A	N/A
KEY B, LIGHT GRAY, W/CPA	33472-0827	B-LG	GCP	PLR	CPA	M	RG				4	5				PLANNED OBSOLESCENCE		N/A	N/A	N/A	N/A
KEY C, BROWN, W/CPA	33472-0828	C-BR	GCP	PLR	CPA	M	RG				4	5				PLANNED OBSOLESCENCE		N/A	N/A	N/A	N/A
KEY D, GREEN, W/CPA	33472-0829	D-GR	GCP	PLR	CPA	M	RG				4	5				PLANNED OBSOLESCENCE	SEE P/N 33472-1010	N/A	N/A	N/A	N/A
VOID KEY	33472-0830																				
KEY A, BLACK, W/O CPA	33472-0831	A-BLK	GCP	PLR		M	RG	1			4	5				PLANNED OBSOLESCENCE		N/A	N/A	N/A	N/A
KEY B, LIGHT GRAY, W/O CPA	33472-0832	B-LG	GCP	PLR		M	RG	1			4	5				PLANNED OBSOLESCENCE		N/A	N/A	N/A	N/A
KEY C, BROWN, W/O CPA	33472-0833	C-BR	GCP	PLR		M	RG	1			4	5				PLANNED OBSOLESCENCE		N/A	N/A	N/A	N/A
KEY D, GREEN, W/O CPA	33472-0834	D-GR	GCP	PLR		M	RG	1			4	5				PLANNED OBSOLESCENCE		N/A	N/A	N/A	N/A
VOID KEY	33472-0835																				
KEY A, BLACK, W/CPA	33472-0836	A-BLK	GCP	PLR	CPA	M	RG	1			4	5				PLANNED OBSOLESCENCE		N/A	N/A	N/A	N/A
KEY B, LIGHT GRAY, W/CPA	33472-0837	B-LG	GCP	PLR	CPA	M	RG	1			4	5				PLANNED OBSOLESCENCE		N/A	N/A	N/A	N/A
KEY C, BROWN, W/CPA	33472-0838	C-BR	GCP	PLR	CPA	M	RG	1			4	5				PLANNED OBSOLESCENCE		N/A	N/A	N/A	N/A
KEY D, GREEN, W/CPA	33472-0839	D-GR	GCP	PLR	CPA	M	RG	1			4	5				PLANNED OBSOLESCENCE		N/A	N/A	N/A	N/A
VOID KEY	33472-0840																				
KEY A, BLACK, W/O CPA	33472-0841	A-BLK	GCP	PLR		M	RG	1			4	5			8	PLANNED OBSOLESCENCE		N/A	N/A	N/A	N/A
KEY B, LIGHT GRAY, W/O CPA	33472-0842	B-LG	GCP	PLR		M	RG	1			4	5			8	PLANNED OBSOLESCENCE		N/A	N/A	N/A	N/A
KEY C, BROWN, W/O CPA	33472-0843	C-BR	GCP	PLR		M	RG	1			4	5			8	PLANNED OBSOLESCENCE		N/A	N/A	N/A	N/A
KEY D, GREEN, W/O CPA	33472-0844	D-GR	GCP	PLR		M	RG	1			4	5			8	PLANNED OBSOLESCENCE		N/A	N/A	N/A	N/A
VOID KEY	33472-0845																				
KEY A, BLACK, W/CPA	33472-0846	A-BLK	GCP	PLR	CPA	M	RG	1			4	5			8	PLANNED OBSOLESCENCE		N/A	N/A	N/A	N/A
KEY B, LIGHT GRAY, W/CPA	33472-0847	B-LG	GCP	PLR	CPA	M	RG	1			4	5			8	PLANNED OBSOLESCENCE		N/A	N/A	N/A	N/A
KEY C, BROWN, W/CPA	33472-0848	C-BR	GCP	PLR	CPA	M	RG	1			4	5			8	PLANNED OBSOLESCENCE		N/A	N/A	N/A	N/A
KEY D, GREEN, W/CPA	33472-0849	D-GR	GCP	PLR	CPA	M	RG	1			4	5			8	PLANNED OBSOLESCENCE		N/A	N/A	N/A	N/A
VOID KEY	33472-0850																				

molex

MX150 RECEPTACLE 2X4 SEALED ASSEMBLY MAT SEAL
BOM AND PIN OUT SHEET

ASSEMBLY DESCRIPTION	ASSEMBLY PART NUMBER	COMPONENT						BLOCKED TERMINALS								STATUS	COMMENTS	OPTIONAL ATTATCHMENTS SOLD SEPERATELY			
		THE PRESENCE OF AN ABBREVIATION INDICATES THE PRESENCE OF THAT COMPONENT.						CAVITY WITH A NUMBER INDICATES BLOCKED TERMINAL POSITION CAVITY WITHOUT A NUMBER INDICATES OPEN TERMINAL POSITION													
		HOUSING KEY/COLOR	GROMMET CAP	PLR	CPA	MAT SEAL	RING SEAL	1	2	3	4	5	6	7	8			BACKSHELL WITH RIBS	BACKSHELL WITHOUT RIBS	90˚ ADAPTOR WITH RIBS	90˚ ADAPTOR WITHOUT RIBS
KEY A, BLACK, W/O CPA	33472-0851	A-BLK	GCP	PLR		M	RG	1	2	3	4	5	6	7	8	PLANNED OBSOLESCENCE		N/A	N/A	N/A	N/A
KEY B, LIGHT GRAY, W/O CPA	33472-0852	B-LG	GCP	PLR		M	RG	1	2	3	4	5	6	7	8	PLANNED OBSOLESCENCE		N/A	N/A	N/A	N/A
KEY C, BROWN, W/O CPA	33472-0853	C-BR	GCP	PLR		M	RG	1	2	3	4	5	6	7	8	PLANNED OBSOLESCENCE		N/A	N/A	N/A	N/A
KEY D, GREEN, W/O CPA	33472-0854	D-GR	GCP	PLR		M	RG	1	2	3	4	5	6	7	8	PLANNED OBSOLESCENCE		N/A	N/A	N/A	N/A
KEY D, BLACK, W/O CPA	33472-0855	D-BLK	GCP	PLR		M	RG	1	2	3	4	5	6	7	8	PLANNED OBSOLESCENCE		N/A	N/A	N/A	N/A
KEY A, BLACK, W/CPA	33472-0856	A-BLK	GCP	PLR	CPA	M	RG		2				6	7		PLANNED OBSOLESCENCE		N/A	N/A	N/A	N/A
KEY A, BLACK, W/CPA	33472-0857	A-BLK	GCP	PLR	CPA	M	RG	1	2			5	6	7		PLANNED OBSOLESCENCE		N/A	N/A	N/A	N/A
KEY A, BLACK, W/CPA	33472-0858	A-BLK	GCP	PLR	CPA	M	RG	1	2	3		5	6	7		PLANNED OBSOLESCENCE		N/A	N/A	N/A	N/A
KEY A, BLACK, W/O CPA	33472-0859	A-BLK	GCP	PLR		M	RG	1	2	3			6	7	8	PLANNED OBSOLESCENCE		N/A	N/A	N/A	N/A
KEY D, BLACK, W/O CPA	33472-0860	D-BLK	GCP	PLR		M	RG				4					PLANNED OBSOLESCENCE		N/A	N/A	N/A	N/A
KEY A, BLACK, W/O CPA	33472-0861	A-BLK	GCP	PLR		M	RG								8	PLANNED OBSOLESCENCE		N/A	N/A	N/A	N/A
KEY A, BLACK, W/O CPA	33472-0862	A-BLK	GCP	PLR		M	RG	1								PLANNED OBSOLESCENCE		N/A	N/A	N/A	N/A
KEY A, BLACK, W/O CPA	33472-0863	A-BLK	GCP	PLR		M	RG		2	3		5			8	PLANNED OBSOLESCENCE		N/A	N/A	N/A	N/A
KEY A, BLACK, W/O CPA	33472-0864	A-BLK	GCP	PLR		M	RG	1		3		5				PLANNED OBSOLESCENCE		N/A	N/A	N/A	N/A
KEY A, BLACK, W/O CPA	33472-0865	A-BLK	GCP	PLR		M	RG	1					6			PLANNED OBSOLESCENCE		N/A	N/A	N/A	N/A
KEY A, BLACK, W/O CPA	33472-0866	A-BLK	GCP	PLR		M	RG		2	3		5	6		8	PLANNED OBSOLESCENCE		N/A	N/A	N/A	N/A
KEY A, BLACK, W/O CPA	33472-0867	A-BLK	GCP	PLR		M	RG	1		3		5	6			PLANNED OBSOLESCENCE		N/A	N/A	N/A	N/A
KEY A, BLACK, W/O CPA	33472-0868	A-BLK	GCP	PLR		M	RG					5	6		8	PLANNED OBSOLESCENCE		N/A	N/A	N/A	N/A
KEY A, BLACK, W/O CPA	33472-0869	A-BLK	GCP	PLR		M	RG						6			PLANNED OBSOLESCENCE		N/A	N/A	N/A	N/A
KEY A, BLACK, W/O CPA	33472-0870	A-BLK	GCP	PLR		M	RG	1		3		5	6	7	8	PLANNED OBSOLESCENCE		N/A	N/A	N/A	N/A
KEY A, BLACK, W/O CPA	33472-0871	A-BLK	GCP	PLR		M	RG		2	3	4	5	6	7		PLANNED OBSOLESCENCE		N/A	N/A	N/A	N/A
KEY A, BLACK, W/O CPA	33472-0872	A-BLK	GCP	PLR		M	RG							7	8	PLANNED OBSOLESCENCE		N/A	N/A	N/A	N/A
KEY A, BLACK, W/O CPA	33472-0873	A-BLK	GCP	PLR		M	RG		2	3			6	7	8	PLANNED OBSOLESCENCE		N/A	N/A	N/A	N/A
KEY A, BLACK, W/O CPA	33472-0874	A-BLK	GCP	PLR		M	RG		2	3						PLANNED OBSOLESCENCE		N/A	N/A	N/A	N/A
KEY A, BLACK, W/O CPA	33472-0875	A-BLK	GCP	PLR		M	RG	1			4					PLANNED OBSOLESCENCE		N/A	N/A	N/A	N/A
KEY A, BLACK, W/O CPA	33472-0876	A-BLK	GCP	PLR		M	RG		2	3		5	6	7	8	PLANNED OBSOLESCENCE		N/A	N/A	N/A	N/A
KEY A, BLACK, W/CPA	33472-0877	A-BLK	GCP	PLR	CPA	M	RG								8	PLANNED OBSOLESCENCE		N/A	N/A	N/A	N/A
KEY A, BLACK, W/O CPA	33472-0878	A-BLK	GCP	PLR		M	RG			3		5	6			PLANNED OBSOLESCENCE		N/A	N/A	N/A	N/A
KEY C, DARK GRAY, W/O CPA	33472-0879	C-DG	GCO	PLR		M	RG									PLANNED OBSOLESCENCE		N/A	N/A	N/A	N/A
KEY D, STONE GRAY, W/O CPA	33472-0880	D-SG	GCO	PLR		M	RG									PLANNED OBSOLESCENCE		N/A	N/A	N/A	N/A
KEY C, DARK GRAY, W/CPA	33472-0881	C-DG	GCO	PLR	CPA	M	RG									PLANNED OBSOLESCENCE		N/A	N/A	N/A	N/A
KEY D, STONE GRAY, W/CPA	33472-0882	D-SG	GCO	PLR	CPA	M	RG									PLANNED OBSOLESCENCE		N/A	N/A	N/A	N/A
KEY A, BLACK, W/O CPA	33472-0883	A-BLK	GCP	PLR		M	RG		2	3	4	5		7	8	PLANNED OBSOLESCENCE		N/A	N/A	N/A	N/A
KEY A, BLACK, W/O CPA	33472-0884	A-BLK	GCP	PLR		M	RG			3			6	7		PLANNED OBSOLESCENCE		N/A	N/A	N/A	N/A
KEY A, BLACK, W/O CPA	33472-0885	A-BLK	GCP	PLR		M	RG		2	3	4	5	6		8	PLANNED OBSOLESCENCE		N/A	N/A	N/A	N/A
KEY A, BLACK, W/O CPA	33472-0886	A-BLK	GCP	PLR		M	RG			3			6		8	PLANNED OBSOLESCENCE		N/A	N/A	N/A	N/A
KEY B, LIGHT GRAY, W/CPA	33472-0887	B-LG	GCP	PLR	CPA	M	RG								8	PLANNED OBSOLESCENCE		N/A	N/A	N/A	N/A
KEY B, LIGHT GRAY, W/O CPA	33472-0888	B-LG	GCP	PLR		M	RG	1					6			PLANNED OBSOLESCENCE		N/A	N/A	N/A	N/A
KEY A, BLACK, W/O CPA	33472-0889	A-BLK	GCP	PLR		M	RG	1				5				PLANNED OBSOLESCENCE		N/A	N/A	N/A	N/A
KEY A, YELLOW, W/CPA	33472-0890	A-YW	GCP	PLR	CPA	M	RG		2	3						PLANNED OBSOLESCENCE		N/A	N/A	N/A	N/A
KEY A, YELLOW, W/CPA	33472-0891	A-YW	GCO	PLR	CPA	M	RG									PLANNED OBSOLESCENCE		N/A	N/A	N/A	N/A
KEY A, YELLOW, W/O CPA	33472-0892	A-YW	GCO	PLR		M	RG									PLANNED OBSOLESCENCE		N/A	N/A	N/A	N/A
KEY A, BLACK, W/CPA	33472-0893	A-BLK	GCP	PLR	CPA	M	RG						6			PLANNED OBSOLESCENCE		N/A	N/A	N/A	N/A
KEY A, BLACK, W/CPA	33472-0894	A-BLK	GCP	PLR	CPA	M	RG	1	2	3			6	7	8	PLANNED OBSOLESCENCE		N/A	N/A	N/A	N/A
KEY A, BLACK, W/O CPA	33472-0895	A-BLK	GCP	PLR		M	RG	1	2							PLANNED OBSOLESCENCE		N/A	N/A	N/A	N/A
KEY A, BLACK, W/O CPA	33472-1001	A-BLK	GCP	PLR		M	RG	1	2	3	4					PLANNED OBSOLESCENCE		N/A	N/A	N/A	N/A
KEY B, LIGHT GRAY, W/O CPA	33472-1002	B-LG	GCP	PLR		M	RG						6			PLANNED OBSOLESCENCE		N/A	N/A	N/A	N/A
KEY A, BLACK, W/O CPA	33472-1003	A-BLK	GCP	PLR		M	RG	1			4					PLANNED OBSOLESCENCE		N/A	N/A	N/A	N/A
KEY A, BLACK, W/O CPA	33472-1004	A-BLK	GCP	PLR		M	RG		2	3		5	6	7	8	PLANNED OBSOLESCENCE		N/A	N/A	N/A	N/A
KEY A, BLACK, W/CPA	33472-1005	A-BLK	GCP	PLR	CPA	M	RG								8	PLANNED OBSOLESCENCE		N/A	N/A	N/A	N/A
KEY A, BLACK, W/O CPA	33472-1006	A-BLK	GCP	PLR		M	RG	1	2	3	4	5	6			PLANNED OBSOLESCENCE		N/A	N/A	N/A	N/A
KEY A, BLACK, W/CPA	33472-1007	A-BLK	GCP	PLR	CPA	M	RG						6	7		PLANNED OBSOLESCENCE		N/A	N/A	N/A	N/A
KEY A, BLACK, W/CPA	33472-1008	A-BLK	GCP	PLR	CPA	M	RG							7		PLANNED OBSOLESCENCE		N/A	N/A	N/A	N/A
KEY D, STONE GRAY, W/CPA	33472-1009	D-SG	GCP	PLR	CPA	M	RG				4					PLANNED OBSOLESCENCE		N/A	N/A	N/A	N/A
KEY D, STONE GRAY, W/CPA	33472-1010	D-SG	GCP	PLR	CPA	M	RG				4	5				PLANNED OBSOLESCENCE		N/A	N/A	N/A	N/A
KEY D, STONE GRAY, W/CPA	33472-1011	D-SG	GCP	PLR	CPA	M	RG				4	5	6			PLANNED OBSOLESCENCE		N/A	N/A	N/A	N/A
KEY A, BLACK, W/O CPA	33472-1012	A-BLK	GCP	PLR		M	RG				4			7	8	PLANNED OBSOLESCENCE		N/A	N/A	N/A	N/A
KEY A, BLACK, W/CPA	33472-1013	A-BLK	GCP	PLR	CPA	M	RG			3	4	5	6	7	8	PLANNED OBSOLESCENCE		N/A	N/A	N/A	N/A
KEY A, BLACK, W/O CPA	33472-1014	A-BLK	GCP	PLR		M	RG			3	4	5	6	7	8	PLANNED OBSOLESCENCE		N/A	N/A	N/A	N/A
KEY A, BLACK, W/CPA	33472-1015	A-BLK	GCP	PLR	CPA	M	RG				4			7	8	PLANNED OBSOLESCENCE		N/A	N/A	N/A	N/A
KEY A, BLACK, W/O CPA	33472-1016	A-BLK	GCP	PLR		M	RG						6	7	8	PLANNED OBSOLESCENCE		N/A	N/A	N/A	N/A
KEY A, BLACK, W/O CPA	33472-1017	A-BLK	GCP	PLR		M	RG	1		3	4				8	PLANNED OBSOLESCENCE		N/A	N/A	N/A	N/A
KEY A, BLACK, W/CPA	33472-1018	A-BLK	GCP	PLR	CPA	M	RG					5	6	7	8	PLANNED OBSOLESCENCE		N/A	N/A	N/A	N/A
KEY A, BLACK, W/CPA	33472-1019	A-BLK	GCP	PLR	CPA	M	RG							7	8	PLANNED OBSOLESCENCE		N/A	N/A	N/A	N/A
KEY A, BLACK, W/CPA	33472-1020	A-BLK	GCP	PLR	CPA	M	RG		2	3	4		6	7	8	PLANNED OBSOLESCENCE		N/A	N/A	N/A	N/A
KEY A, BLACK, W/CPA	33472-1021	A-BLK	GCP	PLR	CPA	M	RG	1	2	3	4	5	6	7	8	PLANNED OBSOLESCENCE		N/A	N/A	N/A	N/A
KEY A, BLACK, W/CPA	33472-1022	A-BLK	GCP	PLR	CPA	M	RG	1				5				PLANNED OBSOLESCENCE		N/A	N/A	N/A	N/A
KEY A, BLACK, W/O CPA	33472-1023	A-BLK	GCP	PLR		M	RG					5	6	7	8	PLANNED OBSOLESCENCE		N/A	N/A	N/A	N/A
KEY A, BLACK, W/O CPA	33472-1024	A-BLK	GCP	PLR		M	RG			3	4					PLANNED OBSOLESCENCE		N/A	N/A	N/A	N/A
KEY D, STONE GRAY, W/O CPA	33472-1025	D-SG	GCP	PLR		M	RG				4	5	6			PLANNED OBSOLESCENCE		N/A	N/A	N/A	N/A
KEY D, STONE GRAY, W/O CPA	33472-1026	D-SG	GCP	PLR		M	RG				4					PLANNED OBSOLESCENCE		N/A	N/A	N/A	N/A
KEY B, LIGHT GRAY, W/O CPA	33472-1027	B-LG	GCP	PLR		M	RG							7	8	PLANNED OBSOLESCENCE		N/A	N/A	N/A	N/A
KEY A, BLACK, W/O CPA	33472-1028	A-BLK	GCP	PLR		M	RG	1	2	3	4			7	8	PLANNED OBSOLESCENCE		N/A	N/A	N/A	N/A
KEY A, BLACK, W/O CPA	33472-1029	A-BLK	GCP	PLR		M	RG			3	4				8	PLANNED OBSOLESCENCE		N/A	N/A	N/A	N/A
KEY A, BLACK, W/O CPA	33472-1030	A-BLK	GCP	PLR		M	RG	1	2	3	4	5		7		PLANNED OBSOLESCENCE		N/A	N/A	N/A	N/A
KEY A, BLACK, W/O CPA	33472-1031	A-BLK	GCP	PLR		M	RG					5				PLANNED OBSOLESCENCE		N/A	N/A	N/A	N/A
KEY A, BLACK, W/O CPA	33472-1032	A-BLK	GCP	PLR		M	RG		2			5				PLANNED OBSOLESCENCE		N/A	N/A	N/A	N/A
KEY B, LIGHT GRAY, W/O CPA	33472-1033	B-LG	GCP	PLR		M	RG	1		3					8	PLANNED OBSOLESCENCE		N/A	N/A	N/A	N/A
KEY B, LIGHT GRAY, W/O CPA	33472-1034	B-LG	GCP	PLR		M	RG			3					8	PLANNED OBSOLESCENCE		N/A	N/A	N/A	N/A
KEY B, LIGHT GRAY, W/O CPA	33472-1035	B-LG	GCP	PLR		M	RG	1								PLANNED OBSOLESCENCE		N/A	N/A	N/A	N/A
KEY A, BLACK, W/O CPA	33472-1036	A-BLK	GCP	PLR		M	RG	1							8	PLANNED OBSOLESCENCE		N/A	N/A	N/A	N/A

molex

MX150 RECEPTACLE 2X4 SEALED ASSEMBLY MAT SEAL
BOM AND PIN OUT SHEET

ASSEMBLY DESCRIPTION	ASSEMBLY PART NUMBER	COMPONENT						BLOCKED TERMINALS								STATUS	COMMENTS	OPTIONAL ATTATCHMENTS SOLD SEPERATELY			
		THE PRESENCE OF AN ABBREVIATION INDICATES THE PRESENCE OF THAT COMPONENT.						CAVITY WITH A NUMBER INDICATES BLOCKED TERMINAL POSITION CAVITY WITHOUT A NUMBER INDICATES OPEN TERMINAL POSITION													
		HOUSING KEY/COLOR	GROMMET CAP	PLR	CPA	MAT SEAL	RING SEAL	1	2	3	4	5	6	7	8			BACKSHELL WITH RIBS	BACKSHELL WITHOUT RIBS	90˚ ADAPTOR WITH RIBS	90˚ ADAPTOR WITHOUT RIBS
KEY A, BLACK, W/O CPA	33472-1037	A-BLK	GCP	PLR		M	RG						6		8	PLANNED OBSOLESCENCE		N/A	N/A	N/A	N/A
KEY A, BLACK, W/O CPA	33472-1038	A-BLK	GCP	PLR		M	RG	1			4	5	6	7	8	PLANNED OBSOLESCENCE		N/A	N/A	N/A	N/A
KEY A, BLACK, W/O CPA	33472-1039	A-BLK	GCP	PLR		M	RG		2					7		PLANNED OBSOLESCENCE		N/A	N/A	N/A	N/A
KEY B, LIGHT GRAY, W/O CPA	33472-1040	B-LG	GCP	PLR		M	RG					5		7		PLANNED OBSOLESCENCE		N/A	N/A	N/A	N/A
KEY A, BLACK, W/O CPA	33472-1041	A-BLK	GCP	PLR		M	RG				4	5	6	7	8	PLANNED OBSOLESCENCE		N/A	N/A	N/A	N/A
KEY A, BLACK, W/O CPA	33472-1042	A-BLK	GCP	PLR		M	RG					5			8	PLANNED OBSOLESCENCE		N/A	N/A	N/A	N/A
KEY A, BLACK, W/O CPA	33472-1043	A-BLK	GCP	PLR		M	RG		2		4	5	6			PLANNED OBSOLESCENCE		N/A	N/A	N/A	N/A
KEY A, BLACK, W/O CPA	33472-1044	A-BLK	GCP	PLR		M	RG	1	2	3	4		6	7		PLANNED OBSOLESCENCE		N/A	N/A	N/A	N/A
KEY A, BLACK, W/O CPA	33472-1045	A-BLK	GCP	PLR		M	RG				4		6			PLANNED OBSOLESCENCE		N/A	N/A	N/A	N/A
KEY A, BLACK, W/CPA	33472-1046	A-BLK	GCP	PLR	CPA	M	RG	1						7		PLANNED OBSOLESCENCE		N/A	N/A	N/A	N/A
KEY B, LIGHT GRAY, W/O CPA	33472-1047	B-LG	GCP	PLR		M	RG					5				PLANNED OBSOLESCENCE		N/A	N/A	N/A	N/A
KEY A, BLACK, W/O CPA	33472-1048	A-BLK	GCP	PLR		M	RG	1	2			5	6		8	PLANNED OBSOLESCENCE		N/A	N/A	N/A	N/A
KEY A, BLACK, W/O CPA	33472-1049	A-BLK	GCP	PLR		M	RG	1	2						8	PLANNED OBSOLESCENCE		N/A	N/A	N/A	N/A
KEY A, BLACK, W/O CPA	33472-1050	A-BLK	GCP	PLR		M	RG				4	5	6			PLANNED OBSOLESCENCE		N/A	N/A	N/A	N/A
KEY A, BLACK, W/O CPA	33472-1051	A-BLK	GCP	PLR		M	RG	1	2	3			6			PLANNED OBSOLESCENCE		N/A	N/A	N/A	N/A
KEY A, BLACK, W/O CPA	33472-1052	A-BLK	GCP	PLR		M	RG				4	5		7	8	PLANNED OBSOLESCENCE		N/A	N/A	N/A	N/A
KEY A, BLACK, W/O CPA	33472-1053	A-BLK	GCP	PLR		M	RG			3	4			7	8	PLANNED OBSOLESCENCE		N/A	N/A	N/A	N/A
KEY A, BLACK, W/O CPA	33472-1054	A-BLK	GCP	PLR		M	RG	1		3	4			7	8	PLANNED OBSOLESCENCE		N/A	N/A	N/A	N/A
KEY A, BLACK, W/O CPA	33472-1055	A-BLK	GCP	PLR		M	RG				4				8	PLANNED OBSOLESCENCE		N/A	N/A	N/A	N/A
KEY A, BLACK, W/O CPA	33472-1056	A-BLK	GCP	PLR		M	RG				4	5			8	PLANNED OBSOLESCENCE		N/A	N/A	N/A	N/A
KEY D, STONE GRAY, W/O CPA	33472-1057	D-SG	GCP	PLR		M	RG	1	2	3	4	5	6	7	8	PLANNED OBSOLESCENCE		N/A	N/A	N/A	N/A
KEY A, BLACK, W/CPA	33472-1058	A-BLK	GCP	PLR	CPA	M	RG		2			5			8	PLANNED OBSOLESCENCE		N/A	N/A	N/A	N/A
KEY B, LIGHT GRAY, W/O CPA	33472-1059	B-LG	GCP	PLR		M	RG		2					7		PLANNED OBSOLESCENCE		N/A	N/A	N/A	N/A
KEY B, LIGHT GRAY, W/O CPA	33472-1060	B-LG	GCP	PLR		M	RG		2							PLANNED OBSOLESCENCE		N/A	N/A	N/A	N/A
KEY A, BLACK, W/O CPA	33472-1061	A-BLK	GCP	PLR		M	RG		2	3	4		6	7	8	PLANNED OBSOLESCENCE		N/A	N/A	N/A	N/A
KEY A, BLACK, W/O CPA	33472-1062	A-BLK	GCP	PLR		M	RG		2	3			6	7		PLANNED OBSOLESCENCE		N/A	N/A	N/A	N/A
KEY A, BLACK, WITH CLIPSLOT, W/O CPA	33472-0901	A-BLK-CLIP	GCO	PLR		M	RG									PLANNED OBSOLESCENCE		34951-0811	34951-0821	34951-0831	34951-0841
KEY B, LIGHT GRAY, WITH CLIPSLOT, W/O CPA	33472-0902	B-LG-CLIP	GCO	PLR		M	RG									PLANNED OBSOLESCENCE		34951-0811	34951-0821	34951-0831	34951-0841
KEY C, BROWN, WITH CLIPSLOT, W/O CPA	33472-0903	C-BR-CLIP	GCO	PLR		M	RG									PLANNED OBSOLESCENCE	SEE P/N 33472-0922	34951-0811	34951-0821	34951-0831	34951-0841
KEY D, GREEN, WITH CLIPSLOT, W/O CPA	33472-0904	D-GR-CLIP	GCO	PLR		M	RG									PLANNED OBSOLESCENCE	SEE P/N 33472-0923	34951-0811	34951-0821	34951-0831	34951-0841
KEY D, BLACK, WITH CLIPSLOT, W/O CPA	33472-0905	D-BLK-CLIP	GCO	PLR		M	RG									PLANNED OBSOLESCENCE		34951-0811	34951-0821	34951-0831	34951-0841
KEY A, BLACK, WITH CLIPSLOT, W/CPA	33472-0906	A-BLK-CLIP	GCO	PLR	CPA	M	RG									PLANNED OBSOLESCENCE		34951-0811	34951-0821	34951-0831	34951-0841
KEY B, LIGHT GRAY, WITH CLIPSLOT, W/CPA	33472-0907	B-LG-CLIP	GCO	PLR	CPA	M	RG									PLANNED OBSOLESCENCE		34951-0811	34951-0821	34951-0831	34951-0841
KEY C, BROWN, WITH CLIPSLOT, W/CPA	33472-0908	C-BR-CLIP	GCO	PLR	CPA	M	RG									PLANNED OBSOLESCENCE	SEE P/N 33472-0924	34951-0811	34951-0821	34951-0831	34951-0841
KEY D, GREEN, WITH CLIPSLOT, W/CPA	33472-0909	D-GR-CLIP	GCO	PLR	CPA	M	RG									PLANNED OBSOLESCENCE	SEE P/N 33472-0925	34951-0811	34951-0821	34951-0831	34951-0841
KEY A, BLACK, WITH CLIPSLOT, W/O CPA	33472-0910	A-BLK-CLIP	GCP	PLR		M	RG				4					PLANNED OBSOLESCENCE		34951-0811	34951-0821	34951-0831	34951-0841
KEY A, BLACK, WITH CLIPSLOT, W/O CPA	33472-0920	A-BLK-CLIP	GCP	PLR		M	RG				4				8	PLANNED OBSOLESCENCE		34951-0811	34951-0821	34951-0831	34951-0841
KEY A, BLACK, WITH CLIPSLOT, W/O CPA	33472-0921	A-BLK-CLIP	GCP	PLR		M	RG								8	PLANNED OBSOLESCENCE		34951-0811	34951-0821	34951-0831	34951-0841
KEY C, DARK GRAY, WITH CLIPSLOT, W/O CPA	33472-0922	C-DG-CLIP	GCO	PLR		M	RG									PLANNED OBSOLESCENCE		34951-0811	34951-0821	34951-0831	34951-0841
KEY D, STONE GRAY, WITH CLIPSLOT, W/O CPA	33472-0923	D-SG-CLIP	GCO	PLR		M	RG									PLANNED OBSOLESCENCE		34951-0811	34951-0821	34951-0831	34951-0841
KEY C, DARK GRAY, WITH CLIPSLOT, W/CPA	33472-0924	C-DG-CLIP	GCO	PLR	CPA	M	RG									PLANNED OBSOLESCENCE		34951-0811	34951-0821	34951-0831	34951-0841
KEY D, STONE GRAY, WITH CLIPSLOT, W/CPA	33472-0925	D-SG-CLIP	GCO	PLR	CPA	M	RG									PLANNED OBSOLESCENCE		34951-0811	34951-0821	34951-0831	34951-0841
KEY B, LIGHT GRAY, WITH CLIPSLOT, W/O CPA	33472-0926	B-LG-CLIP	GCP	PLR		M	RG				4				8	PLANNED OBSOLESCENCE		34951-0811	34951-0821	34951-0831	34951-0841
KEY A, BLACK, WITH CLIPSLOT, W/CPA	33472-0927	A-BLK-CLIP	GCP	PLR	CPA	M	RG				4				8	PLANNED OBSOLESCENCE		34951-0811	34951-0821	34951-0831	34951-0841
KEY B, LIGHT GRAY, WITH CLIPSLOT, W/CPA	33472-0928	B-LG-CLIP	GCP	PLR	CPA	M	RG				4				8	PLANNED OBSOLESCENCE		34951-0811	34951-0821	34951-0831	34951-0841
KEY A, BLACK, WITH CLIPSLOT, W/O CPA	33472-0929	A-BLK-CLIP	GCP	PLR		M	RG				4	5		7	8	PLANNED OBSOLESCENCE		34951-0811	34951-0821	34951-0831	34951-0841
KEY A, BLACK, WITH CLIPSLOT, W/O CPA	33472-0930	A-BLK-CLIP	GCP	PLR		M	RG		2	3	4	5		7	8	PLANNED OBSOLESCENCE		34951-0811	34951-0821	34951-0831	34951-0841
KEY A, BLACK, WITH CLIPSLOT, W/O CPA	33472-0931	A-BLK-CLIP	GCP	PLR		M	RG	1	2	3			6			PLANNED OBSOLESCENCE		34951-0811	34951-0821	34951-0831	34951-0841
KEY A, BLACK, WITH CLIPSLOT, W/O CPA	33472-0932	A-BLK-CLIP	GCP	PLR		M	RG	1					6			PLANNED OBSOLESCENCE		34951-0811	34951-0821	34951-0831	34951-0841
KEY A, BLACK, WITH CLIPSLOT, W/CPA	33472-0933	A-BLK-CLIP	GCP	PLR	CPA	M	RG								8	PLANNED OBSOLESCENCE		34951-0811	34951-0821	34951-0831	34951-0841
KEY B, LIGHT GRAY, WITH CLIPSLOT, W/CPA	33472-0934	B-LG-CLIP	GCP	PLR	CPA	M	RG								8	PLANNED OBSOLESCENCE		34951-0811	34951-0821	34951-0831	34951-0841
KEY A, BLACK, WITH CLIPSLOT, W/CPA	33472-0935	A-BLK-CLIP	GCP	PLR	CPA	M	RG		2	3	4		6	7	8	PLANNED OBSOLESCENCE		34951-0811	34951-0821	34951-0831	34951-0841
KEY A, BLACK, WITH CLIPSLOT, W/O CPA	33472-0936	A-BLK-CLIP	GCP	PLR		M	RG						6	7	8	PLANNED OBSOLESCENCE		34951-0811	34951-0821	34951-0831	34951-0841
KEY A, BLACK, WITH CLIPSLOT, W/O CPA	33472-0937	A-BLK-CLIP	GCP	PLR		M	RG					5			8	PLANNED OBSOLESCENCE		34951-0811	34951-0821	34951-0831	34951-0841
KEY A, BLACK, WITH CLIPSLOT, W/O CPA	33472-0938	A-BLK-CLIP	GCP	PLR		M	RG					5				PLANNED OBSOLESCENCE		34951-0811	34951-0821	34951-0831	34951-0841
KEY A, BLACK, WITH CLIPSLOT, W/O CPA	33472-0939	A-BLK-CLIP	GCP	PLR		M	RG				4	5	6	7	8	PLANNED OBSOLESCENCE		34951-0811	34951-0821	34951-0831	34951-0841
KEY A, BLACK, WITH CLIPSLOT, W/O CPA	33472-0940	A-BLK-CLIP	GCP	PLR		M	RG	1	2			5	6			PLANNED OBSOLESCENCE		34951-0811	34951-0821	34951-0831	34951-0841
KEY A, BLACK, WITH CLIPSLOT, W/O CPA	33472-0941	A-BLK-CLIP	GCP	PLR		M	RG	1	2	3	4	5	6			PLANNED OBSOLESCENCE		34951-0811	34951-0821	34951-0831	34951-0841
KEY A, BLACK, WITH CLIPSLOT, W/O CPA	33472-0944	A-BLK-CLIP	GCP	PLR		M	RG				4	5		7		PLANNED OBSOLESCENCE		34951-0811	34951-0821	34951-0831	34951-0841
KEY A, BLACK, WITH CLIPSLOT, W/O CPA	33472-0945	A-BLK-CLIP	GCP	PLR		M	RG							7		PLANNED OBSOLESCENCE		34951-0811	34951-0821	34951-0831	34951-0841
KEY A, BLACK, WITH CLIPSLOT, W/O CPA	33472-0946	A-BLK-CLIP	GCP	PLR		M	RG			3				7		PLANNED OBSOLESCENCE		34951-0811	34951-0821	34951-0831	34951-0841
KEY A, BLACK, WITH CLIPSLOT, W/O CPA	33472-0947	A-BLK-CLIP	GCP	PLR		M	RG	1		3	4	5	6	7	8	PLANNED OBSOLESCENCE		34951-0811	34951-0821	34951-0831	34951-0841
KEY A, BLACK, W/O CPA	33472-4801	A-BLK	GCO	PLR		M	RR									SALEABLE		N/A	N/A	N/A	N/A
KEY B, LIGHT GRAY, W/O CPA	33472-4802	B-LG	GCO	PLR		M	RR									SALEABLE		N/A	N/A	N/A	N/A
KEY C, BROWN, W/O CPA	33472-4803	C-BR	GCO	PLR		M	RR									NOT RECOMMENDED	SEE P/N 33472-4879	N/A	N/A	N/A	N/A
KEY D, GREEN, W/O CPA	33472-4804	D-GR	GCO	PLR		M	RR									NOT RECOMMENDED	SEE P/N 33472-4880	N/A	N/A	N/A	N/A
KEY D, BLACK, W/O CPA	33472-4805	D-BLK	GCO	PLR		M	RR									SALEABLE		N/A	N/A	N/A	N/A
KEY A, BLACK, W/CPA	33472-4806	A-BLK	GCO	PLR	CPA	M	RR									SALEABLE		N/A	N/A	N/A	N/A
KEY B, LIGHT GRAY, W/CPA	33472-4807	B-LG	GCO	PLR	CPA	M	RR									SALEABLE		N/A	N/A	N/A	N/A
KEY C, BROWN, W/CPA	33472-4808	C-BR	GCO	PLR	CPA	M	RR									NOT RECOMMENDED	SEE P/N 33472-4881	N/A	N/A	N/A	N/A
KEY D, GREEN, W/CPA	33472-4809	D-GR	GCO	PLR	CPA	M	RR									NOT RECOMMENDED	SEE P/N 33472-4882	N/A	N/A	N/A	N/A
VOID KEY	33472-4810																				
KEY A, BLACK, W/O CPA	33472-4811	A-BLK	GCP	PLR		M	RR				4					SALEABLE		N/A	N/A	N/A	N/A
KEY B, LIGHT GRAY, W/O CPA	33472-4812	B-LG	GCP	PLR		M	RR				4					SALEABLE		N/A	N/A	N/A	N/A
KEY C, BROWN, W/O CPA	33472-4813	C-BR	GCP	PLR		M	RR				4					NOT RECOMMENDED		N/A	N/A	N/A	N/A
KEY D, GREEN, W/O CPA	33472-4814	D-GR	GCP	PLR		M	RR				4					NOT RECOMMENDED		N/A	N/A	N/A	N/A
VOID KEY	33472-4815																				
KEY A, BLACK, W/CPA	33472-4816	A-BLK	GCP	PLR	CPA	M	RR				4					SALEABLE		N/A	N/A	N/A	N/A
KEY B, LIGHT GRAY, W/CPA	33472-4817	B-LG	GCP	PLR	CPA	M	RR				4					SALEABLE		N/A	N/A	N/A	N/A
KEY C, BROWN, W/CPA	33472-4818	C-BR	GCP	PLR	CPA	M	RR				4					NOT RECOMMENDED		N/A	N/A	N/A	N/A

molex

MX150 RECEPTACLE 2X4 SEALED ASSEMBLY MAT SEAL
BOM AND PIN OUT SHEET

ASSEMBLY DESCRIPTION	ASSEMBLY PART NUMBER	COMPONENT						BLOCKED TERMINALS								STATUS	COMMENTS	OPTIONAL ATTATCHMENTS SOLD SEPERATELY			
		THE PRESENCE OF AN ABBREVIATION INDICATES THE PRESENCE OF THAT COMPONENT.						CAVITY WITH A NUMBER INDICATES BLOCKED TERMINAL POSITION CAVITY WITHOUT A NUMBER INDICATES OPEN TERMINAL POSITION													
		HOUSING KEY/COLOR	GROMMET CAP	PLR	CPA	MAT SEAL	RING SEAL	1	2	3	4	5	6	7	8			BACKSHELL WITH RIBS	BACKSHELL WITHOUT RIBS	90˚ ADAPTOR WITH RIBS	90˚ ADAPTOR WITHOUT RIBS
KEY D, GREEN, W/CPA	33472-4819	D-GR	GCP	PLR	CPA	M	RR				4					NOT RECOMMENDED	SEE P/N 33472-5009	N/A	N/A	N/A	N/A
VOID KEY	33472-4820																				
KEY A, BLACK, W/O CPA	33472-4821	A-BLK	GCP	PLR		M	RR				4	5				SALEABLE		N/A	N/A	N/A	N/A
KEY B, LIGHT GRAY, W/O CPA	33472-4822	B-LG	GCP	PLR		M	RR				4	5				SALEABLE		N/A	N/A	N/A	N/A
KEY C, BROWN, W/O CPA	33472-4823	C-BR	GCP	PLR		M	RR				4	5				NOT RECOMMENDED		N/A	N/A	N/A	N/A
KEY D, GREEN, W/O CPA	33472-4824	D-GR	GCP	PLR		M	RR				4	5				NOT RECOMMENDED		N/A	N/A	N/A	N/A
VOID KEY	33472-4825																				
KEY A, BLACK, W/CPA	33472-4826	A-BLK	GCP	PLR	CPA	M	RR				4	5				SALEABLE		N/A	N/A	N/A	N/A
KEY B, LIGHT GRAY, W/CPA	33472-4827	B-LG	GCP	PLR	CPA	M	RR				4	5				SALEABLE		N/A	N/A	N/A	N/A
KEY C, BROWN, W/CPA	33472-4828	C-BR	GCP	PLR	CPA	M	RR				4	5				NOT RECOMMENDED		N/A	N/A	N/A	N/A
KEY D, GREEN, W/CPA	33472-4829	D-GR	GCP	PLR	CPA	M	RR				4	5				NOT RECOMMENDED	SEE P/N 33472-5010	N/A	N/A	N/A	N/A
VOID KEY	33472-4830																				
KEY A, BLACK, W/O CPA	33472-4831	A-BLK	GCP	PLR		M	RR	1			4	5				SALEABLE		N/A	N/A	N/A	N/A
KEY B, LIGHT GRAY, W/O CPA	33472-4832	B-LG	GCP	PLR		M	RR	1			4	5				SALEABLE		N/A	N/A	N/A	N/A
KEY C, BROWN, W/O CPA	33472-4833	C-BR	GCP	PLR		M	RR	1			4	5				NOT RECOMMENDED		N/A	N/A	N/A	N/A
KEY D, GREEN, W/O CPA	33472-4834	D-GR	GCP	PLR		M	RR	1			4	5				NOT RECOMMENDED		N/A	N/A	N/A	N/A
VOID KEY	33472-4835																				
KEY A, BLACK, W/CPA	33472-4836	A-BLK	GCP	PLR	CPA	M	RR	1			4	5				SALEABLE		N/A	N/A	N/A	N/A
KEY B, LIGHT GRAY, W/CPA	33472-4837	B-LG	GCP	PLR	CPA	M	RR	1			4	5				SALEABLE		N/A	N/A	N/A	N/A
KEY C, BROWN, W/CPA	33472-4838	C-BR	GCP	PLR	CPA	M	RR	1			4	5				NOT RECOMMENDED		N/A	N/A	N/A	N/A
KEY D, GREEN, W/CPA	33472-4839	D-GR	GCP	PLR	CPA	M	RR	1			4	5				NOT RECOMMENDED		N/A	N/A	N/A	N/A
VOID KEY	33472-4840																				
KEY A, BLACK, W/O CPA	33472-4841	A-BLK	GCP	PLR		M	RR	1			4	5			8	SALEABLE		N/A	N/A	N/A	N/A
KEY B, LIGHT GRAY, W/O CPA	33472-4842	B-LG	GCP	PLR		M	RR	1			4	5			8	SALEABLE		N/A	N/A	N/A	N/A
KEY C, BROWN, W/O CPA	33472-4843	C-BR	GCP	PLR		M	RR	1			4	5			8	NOT RECOMMENDED		N/A	N/A	N/A	N/A
KEY D, GREEN, W/O CPA	33472-4844	D-GR	GCP	PLR		M	RR	1			4	5			8	NOT RECOMMENDED		N/A	N/A	N/A	N/A
VOID KEY	33472-4845																				
KEY A, BLACK, W/CPA	33472-4846	A-BLK	GCP	PLR	CPA	M	RR	1			4	5			8	SALEABLE		N/A	N/A	N/A	N/A
KEY B, LIGHT GRAY, W/CPA	33472-4847	B-LG	GCP	PLR	CPA	M	RR	1			4	5			8	SALEABLE		N/A	N/A	N/A	N/A
KEY C, BROWN, W/CPA	33472-4848	C-BR	GCP	PLR	CPA	M	RR	1			4	5			8	NOT RECOMMENDED		N/A	N/A	N/A	N/A
KEY D, GREEN, W/CPA	33472-4849	D-GR	GCP	PLR	CPA	M	RR	1			4	5			8	NOT RECOMMENDED		N/A	N/A	N/A	N/A
VOID KEY	33472-4850																				
KEY A, BLACK, W/O CPA	33472-4851	A-BLK	GCP	PLR		M	RR	1	2	3	4	5	6	7	8	SALEABLE		N/A	N/A	N/A	N/A
KEY B, LIGHT GRAY, W/O CPA	33472-4852	B-LG	GCP	PLR		M	RR	1	2	3	4	5	6	7	8	SALEABLE		N/A	N/A	N/A	N/A
KEY C, BROWN, W/O CPA	33472-4853	C-BR	GCP	PLR		M	RR	1	2	3	4	5	6	7	8	NOT RECOMMENDED		N/A	N/A	N/A	N/A
KEY D, GREEN, W/O CPA	33472-4854	D-GR	GCP	PLR		M	RR	1	2	3	4	5	6	7	8	NOT RECOMMENDED		N/A	N/A	N/A	N/A
KEY D, BLACK, W/O CPA	33472-4855	D-BLK	GCP	PLR		M	RR	1	2	3	4	5	6	7	8	SALEABLE		N/A	N/A	N/A	N/A
KEY A, BLACK, W/CPA	33472-4856	A-BLK	GCP	PLR	CPA	M	RR		2				6	7		SALEABLE		N/A	N/A	N/A	N/A
KEY A, BLACK, W/CPA	33472-4857	A-BLK	GCP	PLR	CPA	M	RR	1	2			5	6	7		SALEABLE		N/A	N/A	N/A	N/A
KEY A, BLACK, W/CPA	33472-4858	A-BLK	GCP	PLR	CPA	M	RR	1	2	3		5	6	7		SALEABLE		N/A	N/A	N/A	N/A
KEY A, BLACK, W/O CPA	33472-4859	A-BLK	GCP	PLR		M	RR	1	2	3			6	7	8	SALEABLE		N/A	N/A	N/A	N/A
KEY D, BLACK, W/O CPA	33472-4860	D-BLK	GCP	PLR		M	RR				4					SALEABLE		N/A	N/A	N/A	N/A
KEY A, BLACK, W/O CPA	33472-4861	A-BLK	GCP	PLR		M	RR								8	SALEABLE		N/A	N/A	N/A	N/A
KEY A, BLACK, W/O CPA	33472-4862	A-BLK	GCP	PLR		M	RR	1								SALEABLE		N/A	N/A	N/A	N/A
KEY A, BLACK, W/O CPA	33472-4863	A-BLK	GCP	PLR		M	RR		2	3		5			8	SALEABLE		N/A	N/A	N/A	N/A
KEY A, BLACK, W/O CPA	33472-4864	A-BLK	GCP	PLR		M	RR	1		3		5				SALEABLE		N/A	N/A	N/A	N/A
KEY A, BLACK, W/O CPA	33472-4865	A-BLK	GCP	PLR		M	RR	1					6			SALEABLE		N/A	N/A	N/A	N/A
KEY A, BLACK, W/O CPA	33472-4866	A-BLK	GCP	PLR		M	RR		2	3		5	6		8	SALEABLE		N/A	N/A	N/A	N/A
KEY A, BLACK, W/O CPA	33472-4867	A-BLK	GCP	PLR		M	RR	1		3		5	6			SALEABLE		N/A	N/A	N/A	N/A
KEY A, BLACK, W/O CPA	33472-4868	A-BLK	GCP	PLR		M	RR					5	6		8	SALEABLE		N/A	N/A	N/A	N/A
KEY A, BLACK, W/O CPA	33472-4869	A-BLK	GCP	PLR		M	RR						6			SALEABLE		N/A	N/A	N/A	N/A
KEY A, BLACK, W/O CPA	33472-4870	A-BLK	GCP	PLR		M	RR	1		3		5	6	7	8	SALEABLE		N/A	N/A	N/A	N/A
KEY A, BLACK, W/O CPA	33472-4871	A-BLK	GCP	PLR		M	RR		2	3	4	5	6	7		SALEABLE		N/A	N/A	N/A	N/A
KEY A, BLACK, W/O CPA	33472-4872	A-BLK	GCP	PLR		M	RR							7	8	SALEABLE		N/A	N/A	N/A	N/A
KEY A, BLACK, W/O CPA	33472-4873	A-BLK	GCP	PLR		M	RR		2	3			6	7	8	SALEABLE		N/A	N/A	N/A	N/A
KEY A, BLACK, W/O CPA	33472-4874	A-BLK	GCP	PLR		M	RR		2	3						SALEABLE		N/A	N/A	N/A	N/A
KEY A, BLACK, W/O CPA	33472-4875	A-BLK	GCP	PLR		M	RR	1			4					SALEABLE		N/A	N/A	N/A	N/A
KEY A, BLACK, W/O CPA	33472-4876	A-BLK	GCP	PLR		M	RR		2	3		5	6	7	8	SALEABLE		N/A	N/A	N/A	N/A
KEY A, BLACK, W/CPA	33472-4877	A-BLK	GCP	PLR	CPA	M	RR								8	SALEABLE		N/A	N/A	N/A	N/A
KEY A, BLACK, W/O CPA	33472-4878	A-BLK	GCP	PLR		M	RR			3		5	6			SALEABLE		N/A	N/A	N/A	N/A
KEY C, DARK GRAY, W/O CPA	33472-4879	C-DG	GCO	PLR		M	RR									SALEABLE		N/A	N/A	N/A	N/A
KEY D, STONE GRAY, W/O CPA	33472-4880	D-SG	GCO	PLR		M	RR									SALEABLE		N/A	N/A	N/A	N/A
KEY C, DARK GRAY, W/CPA	33472-4881	C-DG	GCO	PLR	CPA	M	RR									SALEABLE		N/A	N/A	N/A	N/A
KEY D, STONE GRAY, W/CPA	33472-4882	D-SG	GCO	PLR	CPA	M	RR									SALEABLE		N/A	N/A	N/A	N/A
KEY A, BLACK, W/O CPA	33472-4883	A-BLK	GCP	PLR		M	RR		2	3	4	5		7	8	SALEABLE		N/A	N/A	N/A	N/A
KEY A, BLACK, W/O CPA	33472-4884	A-BLK	GCP	PLR		M	RR			3			6	7		SALEABLE		N/A	N/A	N/A	N/A
KEY A, BLACK, W/O CPA	33472-4885	A-BLK	GCP	PLR		M	RR		2	3	4	5	6		8	SALEABLE		N/A	N/A	N/A	N/A
KEY A, BLACK, W/O CPA	33472-4886	A-BLK	GCP	PLR		M	RR			3			6		8	SALEABLE		N/A	N/A	N/A	N/A
KEY B, LIGHT GRAY, W/CPA	33472-4887	B-LG	GCP	PLR	CPA	M	RR								8	SALEABLE		N/A	N/A	N/A	N/A
KEY B, LIGHT GRAY, W/O CPA	33472-4888	B-LG	GCP	PLR		M	RR	1					6			SALEABLE		N/A	N/A	N/A	N/A
KEY A, BLACK, W/O CPA	33472-4889	A-BLK	GCP	PLR		M	RR	1				5				SALEABLE		N/A	N/A	N/A	N/A
KEY A, YELLOW, W/CPA	33472-4890	A-YW	GCP	PLR	CPA	M	RR		2	3						SALEABLE		N/A	N/A	N/A	N/A
KEY A, YELLOW, W/CPA	33472-4891	A-YW	GCO	PLR	CPA	M	RR									SALEABLE		N/A	N/A	N/A	N/A
KEY A, YELLOW, W/O CPA	33472-4892	A-YW	GCO	PLR		M	RR									SALEABLE		N/A	N/A	N/A	N/A
KEY A, BLACK, W/CPA	33472-4893	A-BLK	GCP	PLR	CPA	M	RR						6			SALEABLE		N/A	N/A	N/A	N/A
KEY A, BLACK, W/CPA	33472-4894	A-BLK	GCP	PLR	CPA	M	RR	1	2	3			6	7	8	SALEABLE		N/A	N/A	N/A	N/A
KEY A, BLACK, W/O CPA	33472-4895	A-BLK	GCP	PLR		M	RR	1	2							SALEABLE		N/A	N/A	N/A	N/A
KEY A, BLACK, W/O CPA	33472-5001	A-BLK	GCP	PLR		M	RR	1	2	3	4					SALEABLE		N/A	N/A	N/A	N/A
KEY B, LIGHT GRAY, W/O CPA	33472-5002	B-LG	GCP	PLR		M	RR						6			SALEABLE		N/A	N/A	N/A	N/A
KEY A, BLACK, W/O CPA	33472-5003	A-BLK	GCP	PLR		M	RR	1			4					SALEABLE		N/A	N/A	N/A	N/A
KEY A, BLACK, W/O CPA	33472-5004	A-BLK	GCP	PLR		M	RR		2	3		5	6	7	8	SALEABLE		N/A	N/A	N/A	N/A

molex

MX150 RECEPTACLE 2X4 SEALED ASSEMBLY MAT SEAL
BOM AND PIN OUT SHEET

ASSEMBLY DESCRIPTION	ASSEMBLY PART NUMBER	COMPONENT						BLOCKED TERMINALS								STATUS	COMMENTS	OPTIONAL ATTATCHMENTS SOLD SEPERATELY			
		THE PRESENCE OF AN ABBREVIATION INDICATES THE PRESENCE OF THAT COMPONENT.						CAVITY WITH A NUMBER INDICATES BLOCKED TERMINAL POSITION CAVITY WITHOUT A NUMBER INDICATES OPEN TERMINAL POSITION													
		HOUSING KEY/COLOR	GROMMET CAP	PLR	CPA	MAT SEAL	RING SEAL	1	2	3	4	5	6	7	8			BACKSHELL WITH RIBS	BACKSHELL WITHOUT RIBS	90˚ ADAPTOR WITH RIBS	90˚ ADAPTOR WITHOUT RIBS
KEY A, BLACK, W/CPA	33472-5005	A-BLK	GCP	PLR	CPA	M	RR								8	SALEABLE		N/A	N/A	N/A	N/A
KEY A, BLACK, W/O CPA	33472-5006	A-BLK	GCP	PLR		M	RR	1	2	3	4	5	6			SALEABLE		N/A	N/A	N/A	N/A
KEY A, BLACK, W/CPA	33472-5007	A-BLK	GCP	PLR	CPA	M	RR						6	7		SALEABLE		N/A	N/A	N/A	N/A
KEY A, BLACK, W/CPA	33472-5008	A-BLK	GCP	PLR	CPA	M	RR							7		SALEABLE		N/A	N/A	N/A	N/A
KEY D, STONE GRAY, W/CPA	33472-5009	D-SG	GCP	PLR	CPA	M	RR				4					SALEABLE		N/A	N/A	N/A	N/A
KEY D, STONE GRAY, W/CPA	33472-5010	D-SG	GCP	PLR	CPA	M	RR				4	5				SALEABLE		N/A	N/A	N/A	N/A
KEY D, STONE GRAY, W/CPA	33472-5011	D-SG	GCP	PLR	CPA	M	RR				4	5	6			SALEABLE		N/A	N/A	N/A	N/A
KEY A, BLACK, W/O CPA	33472-5012	A-BLK	GCP	PLR		M	RR				4			7	8	SALEABLE		N/A	N/A	N/A	N/A
KEY A, BLACK, W/CPA	33472-5013	A-BLK	GCP	PLR	CPA	M	RR			3	4	5	6	7	8	SALEABLE		N/A	N/A	N/A	N/A
KEY A, BLACK, W/O CPA	33472-5014	A-BLK	GCP	PLR		M	RR			3	4	5	6	7	8	SALEABLE		N/A	N/A	N/A	N/A
KEY A, BLACK, W/CPA	33472-5015	A-BLK	GCP	PLR	CPA	M	RR				4			7	8	SALEABLE		N/A	N/A	N/A	N/A
KEY A, BLACK, W/O CPA	33472-5016	A-BLK	GCP	PLR		M	RR						6	7	8	SALEABLE		N/A	N/A	N/A	N/A
KEY A, BLACK, W/O CPA	33472-5017	A-BLK	GCP	PLR		M	RR	1		3	4				8	SALEABLE		N/A	N/A	N/A	N/A
KEY A, BLACK, W/CPA	33472-5018	A-BLK	GCP	PLR	CPA	M	RR					5	6	7	8	SALEABLE		N/A	N/A	N/A	N/A
KEY A, BLACK, W/CPA	33472-5019	A-BLK	GCP	PLR	CPA	M	RR							7	8	SALEABLE		N/A	N/A	N/A	N/A
KEY A, BLACK, W/CPA	33472-5020	A-BLK	GCP	PLR	CPA	M	RR		2	3	4		6	7	8	SALEABLE		N/A	N/A	N/A	N/A
KEY A, BLACK, W/CPA	33472-5021	A-BLK	GCP	PLR	CPA	M	RR	1	2	3	4	5	6	7	8	SALEABLE		N/A	N/A	N/A	N/A
KEY A, BLACK, W/CPA	33472-5022	A-BLK	GCP	PLR	CPA	M	RR	1				5				SALEABLE		N/A	N/A	N/A	N/A
KEY A, BLACK, W/O CPA	33472-5023	A-BLK	GCP	PLR		M	RR					5	6	7	8	SALEABLE		N/A	N/A	N/A	N/A
KEY A, BLACK, W/O CPA	33472-5024	A-BLK	GCP	PLR		M	RR			3	4					SALEABLE		N/A	N/A	N/A	N/A
KEY D, STONE GRAY, W/O CPA	33472-5025	D-SG	GCP	PLR		M	RR				4	5	6			SALEABLE		N/A	N/A	N/A	N/A
KEY D, STONE GRAY, W/O CPA	33472-5026	D-SG	GCP	PLR		M	RR				4					SALEABLE		N/A	N/A	N/A	N/A
KEY B, LIGHT GRAY, W/O CPA	33472-5027	B-LG	GCP	PLR		M	RR							7	8	SALEABLE		N/A	N/A	N/A	N/A
KEY A, BLACK, W/O CPA	33472-5028	A-BLK	GCP	PLR		M	RR	1	2	3	4			7	8	SALEABLE		N/A	N/A	N/A	N/A
KEY A, BLACK, W/O CPA	33472-5029	A-BLK	GCP	PLR		M	RR			3	4				8	SALEABLE		N/A	N/A	N/A	N/A
KEY A, BLACK, W/O CPA	33472-5030	A-BLK	GCP	PLR		M	RR	1	2	3	4	5		7		SALEABLE		N/A	N/A	N/A	N/A
KEY A, BLACK, W/O CPA	33472-5031	A-BLK	GCP	PLR		M	RR					5				SALEABLE		N/A	N/A	N/A	N/A
KEY A, BLACK, W/O CPA	33472-5032	A-BLK	GCP	PLR		M	RR		2			5				SALEABLE		N/A	N/A	N/A	N/A
KEY B, LIGHT GRAY, W/O CPA	33472-5033	B-LG	GCP	PLR		M	RR	1		3					8	SALEABLE		N/A	N/A	N/A	N/A
KEY B, LIGHT GRAY, W/O CPA	33472-5034	B-LG	GCP	PLR		M	RR			3					8	SALEABLE		N/A	N/A	N/A	N/A
KEY B, LIGHT GRAY, W/O CPA	33472-5035	B-LG	GCP	PLR		M	RR	1								SALEABLE		N/A	N/A	N/A	N/A
KEY A, BLACK, W/O CPA	33472-5036	A-BLK	GCP	PLR		M	RR	1							8	SALEABLE		N/A	N/A	N/A	N/A
KEY A, BLACK, W/O CPA	33472-5037	A-BLK	GCP	PLR		M	RR						6		8	SALEABLE		N/A	N/A	N/A	N/A
KEY A, BLACK, W/O CPA	33472-5038	A-BLK	GCP	PLR		M	RR	1			4	5	6	7	8	SALEABLE		N/A	N/A	N/A	N/A
KEY A, BLACK, W/O CPA	33472-5039	A-BLK	GCP	PLR		M	RR		2					7		SALEABLE		N/A	N/A	N/A	N/A
KEY B, LIGHT GRAY, W/O CPA	33472-5040	B-LG	GCP	PLR		M	RR					5		7		SALEABLE		N/A	N/A	N/A	N/A
KEY A, BLACK, W/O CPA	33472-5041	A-BLK	GCP	PLR		M	RR				4	5	6	7	8	SALEABLE		N/A	N/A	N/A	N/A
KEY A, BLACK, W/O CPA	33472-5042	A-BLK	GCP	PLR		M	RR					5			8	SALEABLE		N/A	N/A	N/A	N/A
KEY A, BLACK, W/O CPA	33472-5043	A-BLK	GCP	PLR		M	RR		2		4	5	6			SALEABLE		N/A	N/A	N/A	N/A
KEY A, BLACK, W/O CPA	33472-5044	A-BLK	GCP	PLR		M	RR	1	2	3	4		6	7		SALEABLE		N/A	N/A	N/A	N/A
KEY A, BLACK, W/O CPA	33472-5045	A-BLK	GCP	PLR		M	RR				4		6			SALEABLE		N/A	N/A	N/A	N/A
KEY A, BLACK, W/CPA	33472-5046	A-BLK	GCP	PLR	CPA	M	RR	1						7		SALEABLE		N/A	N/A	N/A	N/A
KEY B, LIGHT GRAY, W/O CPA	33472-5047	B-LG	GCP	PLR		M	RR					5				SALEABLE		N/A	N/A	N/A	N/A
KEY A, BLACK, W/O CPA	33472-5048	A-BLK	GCP	PLR		M	RR	1	2			5	6		8	SALEABLE		N/A	N/A	N/A	N/A
KEY A, BLACK, W/O CPA	33472-5049	A-BLK	GCP	PLR		M	RR	1	2						8	SALEABLE		N/A	N/A	N/A	N/A
KEY A, BLACK, W/O CPA	33472-5050	A-BLK	GCP	PLR		M	RR				4	5	6			SALEABLE		N/A	N/A	N/A	N/A
KEY A, BLACK, W/O CPA	33472-5051	A-BLK	GCP	PLR		M	RR	1	2	3			6			SALEABLE		N/A	N/A	N/A	N/A
KEY A, BLACK, W/O CPA	33472-5052	A-BLK	GCP	PLR		M	RR				4	5		7	8	SALEABLE		N/A	N/A	N/A	N/A
KEY A, BLACK, W/O CPA	33472-5053	A-BLK	GCP	PLR		M	RR			3	4			7	8	SALEABLE		N/A	N/A	N/A	N/A
KEY A, BLACK, W/O CPA	33472-5054	A-BLK	GCP	PLR		M	RR	1		3	4			7	8	SALEABLE		N/A	N/A	N/A	N/A
KEY A, BLACK, W/O CPA	33472-5055	A-BLK	GCP	PLR		M	RR				4				8	SALEABLE		N/A	N/A	N/A	N/A
KEY A, BLACK, W/O CPA	33472-5056	A-BLK	GCP	PLR		M	RR				4	5			8	SALEABLE		N/A	N/A	N/A	N/A
KEY D, STONE GRAY, W/O CPA	33472-5057	D-SG	GCP	PLR		M	RR	1	2	3	4	5	6	7	8	SALEABLE		N/A	N/A	N/A	N/A
KEY A, BLACK, W/CPA	33472-5058	A-BLK	GCP	PLR	CPA	M	RR		2			5			8	SALEABLE		N/A	N/A	N/A	N/A
KEY B, LIGHT GRAY, W/O CPA	33472-5059	B-LG	GCP	PLR		M	RR		2					7		SALEABLE		N/A	N/A	N/A	N/A
KEY B, LIGHT GRAY, W/O CPA	33472-5060	B-LG	GCP	PLR		M	RR		2							SALEABLE		N/A	N/A	N/A	N/A
KEY A, BLACK, W/O CPA	33472-5061	A-BLK	GCP	PLR		M	RR		2	3	4		6	7	8	SALEABLE		N/A	N/A	N/A	N/A
KEY A, BLACK, W/O CPA	33472-5062	A-BLK	GCP	PLR		M	RR		2	3			6	7		SALEABLE		N/A	N/A	N/A	N/A
KEY A, BLACK, WITH CLIPSLOT, W/O CPA	33472-4901	A-BLK-CLIP	GCO	PLR		M	RR									SALEABLE		34951-0811	34951-0821	34951-0831	34951-0841
KEY B, LIGHT GRAY, WITH CLIPSLOT, W/O CPA	33472-4902	B-LG-CLIP	GCO	PLR		M	RR									SALEABLE		34951-0811	34951-0821	34951-0831	34951-0841
KEY C, BROWN, WITH CLIPSLOT, W/O CPA	33472-4903	C-BR-CLIP	GCO	PLR		M	RR									NOT RECOMMENDED	SEE P/N 33472-4922	34951-0811	34951-0821	34951-0831	34951-0841
KEY D, GREEN, WITH CLIPSLOT, W/O CPA	33472-4904	D-GR-CLIP	GCO	PLR		M	RR									NOT RECOMMENDED	SEE P/N 33472-4923	34951-0811	34951-0821	34951-0831	34951-0841
KEY D, BLACK, WITH CLIPSLOT, W/O CPA	33472-4905	D-BLK-CLIP	GCO	PLR		M	RR									SALEABLE		34951-0811	34951-0821	34951-0831	34951-0841
KEY A, BLACK, WITH CLIPSLOT, W/CPA	33472-4906	A-BLK-CLIP	GCO	PLR	CPA	M	RR									SALEABLE		34951-0811	34951-0821	34951-0831	34951-0841
KEY B, LIGHT GRAY, WITH CLIPSLOT, W/CPA	33472-4907	B-LG-CLIP	GCO	PLR	CPA	M	RR									SALEABLE		34951-0811	34951-0821	34951-0831	34951-0841
KEY C, BROWN, WITH CLIPSLOT, W/CPA	33472-4908	C-BR-CLIP	GCO	PLR	CPA	M	RR									NOT RECOMMENDED	SEE P/N 33472-4924	34951-0811	34951-0821	34951-0831	34951-0841
KEY D, GREEN, WITH CLIPSLOT, W/CPA	33472-4909	D-GR-CLIP	GCO	PLR	CPA	M	RR									NOT RECOMMENDED	SEE P/N 33472-4925	34951-0811	34951-0821	34951-0831	34951-0841
KEY A, BLACK, WITH CLIPSLOT, W/O CPA	33472-4910	A-BLK-CLIP	GCP	PLR		M	RR				4					SALEABLE		34951-0811	34951-0821	34951-0831	34951-0841
KEY A, BLACK, WITH CLIPSLOT, W/O CPA	33472-4920	A-BLK-CLIP	GCP	PLR		M	RR				4				8	SALEABLE		34951-0811	34951-0821	34951-0831	34951-0841
KEY A, BLACK, WITH CLIPSLOT, W/O CPA	33472-4921	A-BLK-CLIP	GCP	PLR		M	RR								8	SALEABLE		34951-0811	34951-0821	34951-0831	34951-0841
KEY C, DARK GRAY, WITH CLIPSLOT, W/O CPA	33472-4922	C-DG-CLIP	GCO	PLR		M	RR									SALEABLE		34951-0811	34951-0821	34951-0831	34951-0841
KEY D, STONE GRAY, WITH CLIPSLOT, W/O CPA	33472-4923	D-SG-CLIP	GCO	PLR		M	RR									SALEABLE		34951-0811	34951-0821	34951-0831	34951-0841
KEY C, DARK GRAY, WITH CLIPSLOT, W/CPA	33472-4924	C-DG-CLIP	GCO	PLR	CPA	M	RR									SALEABLE		34951-0811	34951-0821	34951-0831	34951-0841
KEY D, STONE GRAY, WITH CLIPSLOT, W/CPA	33472-4925	D-SG-CLIP	GCO	PLR	CPA	M	RR									SALEABLE		34951-0811	34951-0821	34951-0831	34951-0841
KEY B, LIGHT GRAY, WITH CLIPSLOT, W/O CPA	33472-4926	B-LG-CLIP	GCP	PLR		M	RR				4				8	SALEABLE		34951-0811	34951-0821	34951-0831	34951-0841
KEY A, BLACK, WITH CLIPSLOT, W/CPA	33472-4927	A-BLK-CLIP	GCP	PLR	CPA	M	RR				4				8	SALEABLE		34951-0811	34951-0821	34951-0831	34951-0841
KEY B, LIGHT GRAY, WITH CLIPSLOT, W/CPA	33472-4928	B-LG-CLIP	GCP	PLR	CPA	M	RR				4				8	SALEABLE		34951-0811	34951-0821	34951-0831	34951-0841
KEY A, BLACK, WITH CLIPSLOT, W/O CPA	33472-4929	A-BLK-CLIP	GCP	PLR		M	RR				4	5		7	8	SALEABLE		34951-0811	34951-0821	34951-0831	34951-0841
KEY A, BLACK, WITH CLIPSLOT, W/O CPA	33472-4930	A-BLK-CLIP	GCP	PLR		M	RR		2	3	4	5		7	8	SALEABLE		34951-0811	34951-0821	34951-0831	34951-0841
KEY A, BLACK, WITH CLIPSLOT, W/O CPA	33472-4931	A-BLK-CLIP	GCP	PLR		M	RR	1	2	3			6			SALEABLE		34951-0811	34951-0821	34951-0831	34951-0841
KEY A, BLACK, WITH CLIPSLOT, W/O CPA	33472-4932	A-BLK-CLIP	GCP	PLR		M	RR	1					6			SALEABLE		34951-0811	34951-0821	34951-0831	34951-0841

molex

MX150 RECEPTACLE 2X4 SEALED ASSEMBLY MAT SEAL
BOM AND PIN OUT SHEET

ASSEMBLY DESCRIPTION	ASSEMBLY PART NUMBER	COMPONENT						BLOCKED TERMINALS								STATUS	COMMENTS	OPTIONAL ATTATCHMENTS SOLD SEPERATELY			
		THE PRESENCE OF AN ABBREVIATION INDICATES THE PRESENCE OF THAT COMPONENT.						CAVITY WITH A NUMBER INDICATES BLOCKED TERMINAL POSITION CAVITY WITHOUT A NUMBER INDICATES OPEN TERMINAL POSITION													
		HOUSING KEY/COLOR	GROMMET CAP	PLR	CPA	MAT SEAL	RING SEAL	1	2	3	4	5	6	7	8			BACKSHELL WITH RIBS	BACKSHELL WITHOUT RIBS	90˚ ADAPTOR WITH RIBS	90˚ ADAPTOR WITHOUT RIBS
KEY A, BLACK, WITH CLIPSLOT, W/CPA	33472-4933	A-BLK-CLIP	GCP	PLR	CPA	M	RR								8	SALEABLE		34951-0811	34951-0821	34951-0831	34951-0841
KEY B, LIGHT GRAY, WITH CLIPSLOT, W/CPA	33472-4934	B-LG-CLIP	GCP	PLR	CPA	M	RR								8	SALEABLE		34951-0811	34951-0821	34951-0831	34951-0841
KEY A, BLACK, WITH CLIPSLOT, W/CPA	33472-4935	A-BLK-CLIP	GCP	PLR	CPA	M	RR		2	3	4		6	7	8	SALEABLE		34951-0811	34951-0821	34951-0831	34951-0841
KEY A, BLACK, WITH CLIPSLOT, W/O CPA	33472-4936	A-BLK-CLIP	GCP	PLR		M	RR						6	7	8	SALEABLE		34951-0811	34951-0821	34951-0831	34951-0841
KEY A, BLACK, WITH CLIPSLOT, W/O CPA	33472-4937	A-BLK-CLIP	GCP	PLR		M	RR					5			8	SALEABLE		34951-0811	34951-0821	34951-0831	34951-0841
KEY A, BLACK, WITH CLIPSLOT, W/O CPA	33472-4938	A-BLK-CLIP	GCP	PLR		M	RR					5				SALEABLE		34951-0811	34951-0821	34951-0831	34951-0841
KEY A, BLACK, WITH CLIPSLOT, W/O CPA	33472-4939	A-BLK-CLIP	GCP	PLR		M	RR				4	5	6	7	8	SALEABLE		34951-0811	34951-0821	34951-0831	34951-0841
KEY A, BLACK, WITH CLIPSLOT, W/O CPA	33472-4940	A-BLK-CLIP	GCP	PLR		M	RR	1	2			5	6			SALEABLE		34951-0811	34951-0821	34951-0831	34951-0841
KEY A, BLACK, WITH CLIPSLOT, W/O CPA	33472-4941	A-BLK-CLIP	GCP	PLR		M	RR	1	2	3	4	5	6			SALEABLE		34951-0811	34951-0821	34951-0831	34951-0841
KEY A, BLACK, WITH CLIPSLOT, W/O CPA	33472-4942	A-BLK-CLIP	GCP	PLR		M	RR				4	5	6			SALEABLE		34951-0811	34951-0821	34951-0831	34951-0841
KEY A, BLACK, WITH CLIPSLOT, W/O CPA	33472-4943	A-BLK-CLIP	GCP	PLR		M	RR		2	3			6	7		SALEABLE		34951-0811	34951-0821	34951-0831	34951-0841
KEY A, BLACK, WITH CLIPSLOT, W/O CPA	33472-4944	A-BLK-CLIP	GCP	PLR		M	RR				4	5		7		SALEABLE		34951-0811	34951-0821	34951-0831	34951-0841
KEY A, BLACK, WITH CLIPSLOT, W/O CPA	33472-4945	A-BLK-CLIP	GCP	PLR		M	RR							7		SALEABLE		34951-0811	34951-0821	34951-0831	34951-0841
KEY A, BLACK, WITH CLIPSLOT, W/O CPA	33472-4946	A-BLK-CLIP	GCP	PLR		M	RR			3				7		SALEABLE		34951-0811	34951-0821	34951-0831	34951-0841
KEY A, BLACK, WITH CLIPSLOT, W/O CPA	33472-4947	A-BLK-CLIP	GCP	PLR		M	RR	1		3	4	5	6	7	8	SALEABLE		34951-0811	34951-0821	34951-0831	34951-0841
KEY A, BLACK, WITH CLIPSLOT, W/CPA	33472-5063	A-BLK-CLIP	GCP	PLR	CPA	M	RR					5	6	7	8	SALEABLE		34951-0811	34951-0821	34951-0831	34951-0841
KEY A, BLACK, WITH CLIPSLOT, W/O CPA	33472-5064	A-BLK-CLIP	GCP	PLR		M	RR					5	6	7	8	SALEABLE		34951-0811	34951-0821	34951-0831	34951-0841
KEY B, LIGHT GRAY, W/O CPA	33472-5065	B-LG	GCP	PLR		M	RR	1			4			7	8	SALEABLE		N/A	N/A	N/A	N/A
KEY A, BLACK, W/O CPA	33472-5066	A-BLK	GCP	PLR		M	RR			3						SALEABLE		N/A	N/A	N/A	N/A
KEY A, BLACK, WITH CLIPSLOT, W/O CPA	33472-5067	A-BLK-CLIP	GCP	PLR		M	RR	1						7	8	SALEABLE		34951-0811	34951-0821	34951-0831	34951-0841

MX150 RECEPTACLE 2X6 SEALED ASSEMBLY MAT SEAL
BOM AND PIN OUT SHEET

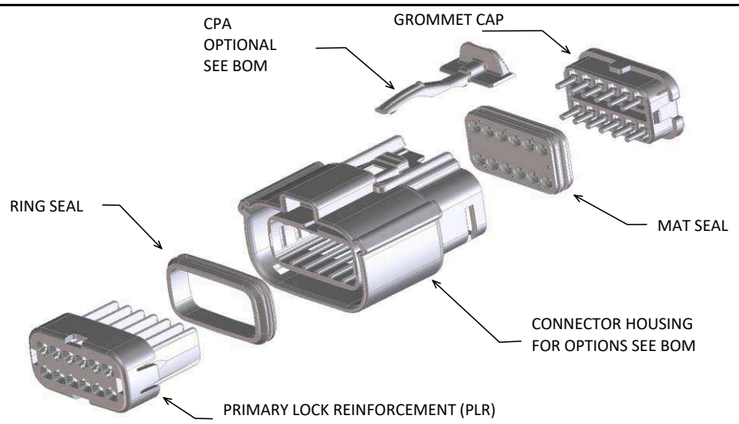

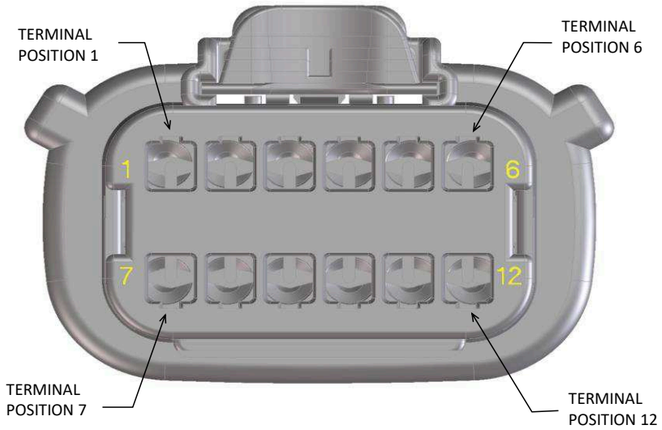

ABBREVIATION	DESCRIPTION	COLOR	MATERIAL
A-BLK	HOUSING, KEYING OPTION A	BLACK	SPS/NYLON GF20
B-LG	HOUSING, KEYING OPTION B	LIGHT GRAY	SPS/NYLON GF20
C-BR	HOUSING, KEYING OPTION C	BROWN	SPS/NYLON GF20
D-GR	HOUSING, KEYING OPTION D	GREEN	SPS/NYLON GF20
C-DG	HOUSING, KEYING OPTION C	DARK GRAY	SPS/NYLON GF20
D-SG	HOUSING, KEYING OPTION D	STONE GRAY	SPS/NYLON GF20
A-YW	HOUSING, KEYING OPTION A	YELLOW	SPS/NYLON GF20
A-BLK-CLIP	HOUSING, KEYING OPTION A WITH CLIPSLOT	BLACK	SPS/NYLON GF20
B-LG-CLIP	HOUSING, KEYING OPTION B WITH CLIPSLOT	LIGHT GRAY	SPS/NYLON GF20
C-BR-CLIP	HOUSING, KEYING OPTION C WITH CLIPSLOT	BROWN	SPS/NYLON GF20
D-GR-CLIP	HOUSING, KEYING OPTION D WITH CLIPSLOT	GREEN	SPS/NYLON GF20
C-DG-CLIP	HOUSING, KEYING OPTION C WITH CLIPSLOT	DARK GRAY	SPS/NYLON GF20
D-SG-CLIP	HOUSING, KEYING OPTION D WITH CLIPSLOT	STONE GRAY	SPS/NYLON GF20
GC	GROMMET CAP	BLACK	SPS/NYLON GF20
PLR	PLR	NATURAL	SPS/NYLON GF20
CPA	CPA	RED	PBT GF30
M	MAT SEAL	LIGHT BLUE	INHERENTLY LUBRICATED SILICONE
R	RING SEAL	GREEN	INHERENTLY LUBRICATED SILICONE

FOR ADDITIONAL INFORMATION SEE SD-33472-0001

ASSEMBLY DESCRIPTION	ASSEMBLY PART NUMBER	COMPONENT						BLOCKED TERMINALS												STATUS	COMMENTS	OPTIONAL ATTATCHMENTS SOLD SEPERATELY	
		THE PRESENCE OF AN ABBREVIATION INDICATES THE PRESENCE OF THAT COMPONENT.						CAVITY WITH A NUMBER INDICATES BLOCKED TERMINAL POSITION CAVITY WITHOUT A NUMBER INDICATES OPEN TERMINAL POSITION															
		HOUSING KEY/COLOR	GROMMET CAP	PLR	CPA	MAT SEAL	RING SEAL	1	2	3	4	5	6	7	8	9	10	11	12			BACKSHELL WITH RIBS	BACKSHELL WITHOUT RIBS
KEY A, BLACK, W/O CPA	33472-1201	A-BLK	GC	PLR		M	R													SALEABLE		34951-1210	34951-1220
KEY B, LIGHT GRAY, W/O CPA	33472-1202	B-LG	GC	PLR		M	R													SALEABLE		34951-1210	34951-1220
KEY C, BROWN, W/O CPA	33472-1203	C-BR	GC	PLR		M	R													NOT RECOMMENDED	SEE P/N 33472-1253	34951-1210	34951-1220
KEY D, GREEN, W/O CPA	33472-1204	D-GR	GC	PLR		M	R													NOT RECOMMENDED	SEE P/N 33472-1254	34951-1210	34951-1220
VOID KEY	33472-1205																						
KEY A, BLACK, W/CPA	33472-1206	A-BLK	GC	PLR	CPA	M	R													SALEABLE		34951-1210	34951-1220
KEY B, LIGHT GRAY, W/CPA	33472-1207	B-LG	GC	PLR	CPA	M	R													SALEABLE		34951-1210	34951-1220
KEY C, BROWN, W/CPA	33472-1208	C-BR	GC	PLR	CPA	M	R													NOT RECOMMENDED	SEE P/N 33472-1259	34951-1210	34951-1220
KEY D, GREEN, W/CPA	33472-1209	D-GR	GC	PLR	CPA	M	R													NOT RECOMMENDED	SEE P/N 33472-1260	34951-1210	34951-1220
VOID KEY	33472-1210																						
KEY A, BLACK, W/O CPA	33472-1211	A-BLK	GC	PLR		M	R						6							SALEABLE		34951-1210	34951-1220
KEY B, LIGHT GRAY, W/O CPA	33472-1212	B-LG	GC	PLR		M	R						6							SALEABLE		34951-1210	34951-1220
KEY C, BROWN, W/O CPA	33472-1213	C-BR	GC	PLR		M	R						6							NOT RECOMMENDED		34951-1210	34951-1220
KEY D, GREEN, W/O CPA	33472-1214	D-GR	GC	PLR		M	R						6							NOT RECOMMENDED		34951-1210	34951-1220
VOID KEY	33472-1215																						
KEY A, BLACK, W/CPA	33472-1216	A-BLK	GC	PLR	CPA	M	R						6							SALEABLE		34951-1210	34951-1220
KEY B, LIGHT GRAY, W/CPA	33472-1217	B-LG	GC	PLR	CPA	M	R						6							SALEABLE		34951-1210	34951-1220
KEY C, BROWN, W/CPA	33472-1218	C-BR	GC	PLR	CPA	M	R						6							NOT RECOMMENDED		34951-1210	34951-1220
KEY D, GREEN, W/CPA	33472-1219	D-GR	GC	PLR	CPA	M	R						6							NOT RECOMMENDED		34951-1210	34951-1220
VOID KEY	33472-1220																						
KEY A, BLACK, W/O CPA	33472-1221	A-BLK	GC	PLR		M	R						6	7						SALEABLE		34951-1210	34951-1220
KEY B, LIGHT GRAY, W/O CPA	33472-1222	B-LG	GC	PLR		M	R						6	7						SALEABLE		34951-1210	34951-1220
KEY C, BROWN, W/O CPA	33472-1223	C-BR	GC	PLR		M	R						6	7						NOT RECOMMENDED		34951-1210	34951-1220
KEY D, GREEN, W/O CPA	33472-1224	D-GR	GC	PLR		M	R						6	7						NOT RECOMMENDED		34951-1210	34951-1220
VOID KEY	33472-1225																						
KEY A, BLACK, W/CPA	33472-1226	A-BLK	GC	PLR	CPA	M	R						6	7						SALEABLE		34951-1210	34951-1220
KEY B, LIGHT GRAY, W/CPA	33472-1227	B-LG	GC	PLR	CPA	M	R						6	7						SALEABLE		34951-1210	34951-1220
KEY C, BROWN, W/CPA	33472-1228	C-BR	GC	PLR	CPA	M	R						6	7						NOT RECOMMENDED		34951-1210	34951-1220
KEY D, GREEN, W/CPA	33472-1229	D-GR	GC	PLR	CPA	M	R						6	7						NOT RECOMMENDED		34951-1210	34951-1220
VOID KEY	33472-1230																						
KEY A, BLACK, W/O CPA	33472-1231	A-BLK	GC	PLR		M	R	1					6	7						SALEABLE		34951-1210	34951-1220
KEY B, LIGHT GRAY, W/O CPA	33472-1232	B-LG	GC	PLR		M	R	1					6	7						SALEABLE		34951-1210	34951-1220
KEY C, BROWN, W/O CPA	33472-1233	C-BR	GC	PLR		M	R	1					6	7						NOT RECOMMENDED		34951-1210	34951-1220
KEY D, GREEN, W/O CPA	33472-1234	D-GR	GC	PLR		M	R	1					6	7						NOT RECOMMENDED		34951-1210	34951-1220
VOID KEY	33472-1235																						
KEY A, BLACK, W/CPA	33472-1236	A-BLK	GC	PLR	CPA	M	R	1					6	7						SALEABLE		34951-1210	34951-1220
KEY B, LIGHT GRAY, W/CPA	33472-1237	B-LG	GC	PLR	CPA	M	R	1					6	7						SALEABLE		34951-1210	34951-1220
KEY C, BROWN, W/CPA	33472-1238	C-BR	GC	PLR	CPA	M	R	1					6	7						NOT RECOMMENDED		34951-1210	34951-1220
KEY D, GREEN, W/CPA	33472-1239	D-GR	GC	PLR	CPA	M	R	1					6	7						NOT RECOMMENDED		34951-1210	34951-1220
VOID KEY	33472-1240																						
KEY A, BLACK, W/O CPA	33472-1241	A-BLK	GC	PLR		M	R	1					6	7					12	SALEABLE		34951-1210	34951-1220
KEY B, LIGHT GRAY, W/O CPA	33472-1242	B-LG	GC	PLR		M	R	1					6	7					12	SALEABLE		34951-1210	34951-1220
KEY C, BROWN, W/O CPA	33472-1243	C-BR	GC	PLR		M	R	1					6	7					12	NOT RECOMMENDED		34951-1210	34951-1220
KEY D, GREEN, W/O CPA	33472-1244	D-GR	GC	PLR		M	R	1					6	7					12	NOT RECOMMENDED		34951-1210	34951-1220
VOID KEY	33472-1245																						
KEY A, BLACK, W/CPA	33472-1246	A-BLK	GC	PLR	CPA	M	R	1					6	7					12	SALEABLE		34951-1210	34951-1220
KEY B, LIGHT GRAY, W/CPA	33472-1247	B-LG	GC	PLR	CPA	M	R	1					6	7					12	SALEABLE		34951-1210	34951-1220
KEY C, BROWN, W/CPA	33472-1248	C-BR	GC	PLR	CPA	M	R	1					6	7					12	NOT RECOMMENDED		34951-1210	34951-1220
KEY D, GREEN, W/CPA	33472-1249	D-GR	GC	PLR	CPA	M	R	1					6	7					12	NOT RECOMMENDED		34951-1210	34951-1220
VOID KEY	33472-1250																						
KEY A, BLACK, W/O CPA	33472-1251	A-BLK	GC	PLR		M	R						6						12	SALEABLE		34951-1210	34951-1220
KEY A, BLACK, W/CPA	33472-1252	A-BLK	GC	PLR	CPA	M	R									9	10			SALEABLE		34951-1210	34951-1220
KEY C, DARK GRAY, W/O CPA	33472-1253	C-DG	GC	PLR		M	R													SALEABLE		34951-1210	34951-1220
KEY D, STONE GRAY, W/O CPA	33472-1254	D-SG	GC	PLR		M	R													SALEABLE		34951-1210	34951-1220

molex

MX150 RECEPTACLE 2X6 SEALED ASSEMBLY MAT SEAL
BOM AND PIN OUT SHEET

ASSEMBLY DESCRIPTION	ASSEMBLY PART NUMBER	COMPONENT						BLOCKED TERMINALS												STATUS	COMMENTS	OPTIONAL ATTATCHMENTS SOLD SEPERATELY	
		THE PRESENCE OF AN ABBREVIATION INDICATES THE PRESENCE OF THAT COMPONENT.						CAVITY WITH A NUMBER INDICATES BLOCKED TERMINAL POSITION CAVITY WITHOUT A NUMBER INDICATES OPEN TERMINAL POSITION															
		HOUSING KEY/COLOR	GROMMET CAP	PLR	CPA	MAT SEAL	RING SEAL	1	2	3	4	5	6	7	8	9	10	11	12			BACKSHELL WITH RIBS	BACKSHELL WITHOUT RIBS
KEY A, BLACK, W/CPA	33472-1255	A-BLK	GC	PLR	CPA	M	R											11		SALEABLE		34951-1210	34951-1220
KEY A, BLACK, W/CPA	33472-1256	A-BLK	GC	PLR	CPA	M	R									9	10	11	12	SALEABLE		34951-1210	34951-1220
KEY A, BLACK, W/O CPA	33472-1257	A-BLK	GC	PLR		M	R								8		10		12	SALEABLE		34951-1210	34951-1220
KEY A, BLACK, W/O CPA	33472-1258	A-BLK	GC	PLR		M	R	1	2	3	4	5	6	7	8	9	10	11	12	SALEABLE		34951-1210	34951-1220
KEY C, DARK GRAY, W/CPA	33472-1259	C-DG	GC	PLR	CPA	M	R													SALEABLE		34951-1210	34951-1220
KEY D, STONE GRAY, W/CPA	33472-1260	D-SG	GC	PLR	CPA	M	R													SALEABLE		34951-1210	34951-1220
KEY A, BLACK, W/O CPA	33472-1261	A-BLK	GC	PLR		M	R									9	10		12	SALEABLE		34951-1210	34951-1220
KEY A, BLACK, W/CPA	33472-1262	A-BLK	GC	PLR	CPA	M	R								8	9	10	11	12	SALEABLE		34951-1210	34951-1220
KEY B, LIGHT GRAY, W/CPA	33472-1263	B-LG	GC	PLR	CPA	M	R												12	SALEABLE		34951-1210	34951-1220
KEY C, DARK GRAY, W/CPA	33472-1264	C-DG	GC	PLR	CPA	M	R											11	12	SALEABLE		34951-1210	34951-1220
KEY D, STONE GRAY, W/CPA	33472-1265	D-SG	GC	PLR	CPA	M	R												12	SALEABLE		34951-1210	34951-1220
KEY A, BLACK, W/CPA	33472-1266	A-BLK	GC	PLR	CPA	M	R											11	12	SALEABLE		34951-1210	34951-1220
KEY D, STONE GRAY, W/CPA	33472-1267	D-SG	GC	PLR	CPA	M	R	1					6	7						SALEABLE		34951-1210	34951-1220
KEY A, BLACK, W/CPA	33472-1268	A-BLK	GC	PLR	CPA	M	R	1						7						SALEABLE		34951-1210	34951-1220
KEY A, BLACK, W/CPA	33472-1269	A-BLK	GC	PLR	CPA	M	R	1	2		4		6	7	8		10	11	12	SALEABLE		34951-1210	34951-1220
KEY A, BLACK, W/CPA	33472-1270	A-BLK	GC	PLR	CPA	M	R							7		9		11	12	SALEABLE		34951-1210	34951-1220
KEY A, BLACK, W/CPA	33472-1271	A-BLK	GC	PLR	CPA	M	R				4		6				10	11	12	SALEABLE		34951-1210	34951-1220
KEY A, BLACK, W/CPA	33472-1272	A-BLK	GC	PLR	CPA	M	R						6			9	10	11	12	SALEABLE		34951-1210	34951-1220
KEY A, BLACK, W/O CPA	33472-1273	A-BLK	GC	PLR		M	R						6			9	10	11	12	SALEABLE		34951-1210	34951-1220
KEY A, BLACK, W/CPA	33472-1274	A-BLK	GC	PLR	CPA	M	R						6					11	12	SALEABLE		34951-1210	34951-1220
KEY A, BLACK, W/O CPA	33472-1275	A-BLK	GC	PLR		M	R	1	2	3	4	5	6		8					SALEABLE		34951-1210	34951-1220
KEY A, BLACK, W/O CPA	33472-1276	A-BLK	GC	PLR		M	R	1					6							SALEABLE		34951-1210	34951-1220
KEY A, BLACK, W/O CPA	33472-1277	A-BLK	GC	PLR		M	R	1						7					12	SALEABLE		34951-1210	34951-1220
KEY B, LIGHT GRAY, W/CPA	33472-1278	B-LG	GC	PLR	CPA	M	R										10	11		SALEABLE		34951-1210	34951-1220
KEY A, BLACK, W/O CPA	33472-1279	A-BLK	GC	PLR		M	R							7				11		SALEABLE		34951-1210	34951-1220
KEY A, BLACK, W/O CPA	33472-1280	A-BLK	GC	PLR		M	R		2					7						SALEABLE		34951-1210	34951-1220
KEY A, BLACK, W/O CPA	33472-1281	A-BLK	GC	PLR		M	R	1			4					9			12	SALEABLE		34951-1210	34951-1220
KEY A, BLACK, W/CPA	33472-1282	A-BLK	GC	PLR	CPA	M	R	1	2				6	7	8				12	SALEABLE		34951-1210	34951-1220
KEY A, BLACK, W/CPA	33472-1283	A-BLK	GC	PLR	CPA	M	R	1						7					12	SALEABLE		34951-1210	34951-1220
KEY A, BLACK, W/CPA	33472-1284	A-BLK	GC	PLR	CPA	M	R	1	2	3	4	5	6		8					SALEABLE		34951-1210	34951-1220
KEY A, BLACK, W/CPA	33472-1285	A-BLK	GC	PLR	CPA	M	R	1					6							SALEABLE		34951-1210	34951-1220
KEY C, DARK GRAY, W/CPA	33472-1286	C-DG	GC	PLR	CPA	M	R	1					6	7						SALEABLE		34951-1210	34951-1220
KEY A, BLACK, W/CPA	33472-1287	A-BLK	GC	PLR	CPA	M	R										10	11	12	SALEABLE		34951-1210	34951-1220
KEY C, DARK GRAY, W/CPA	33472-1288	C-DG	GC	PLR	CPA	M	R												12	SALEABLE		34951-1210	34951-1220
KEY C, DARK GRAY, W/CPA	33472-1289	C-DG	GC	PLR	CPA	M	R									9	10	11	12	SALEABLE		34951-1210	34951-1220
KEY A, BLACK, W/CPA	33472-1290	A-BLK	GC	PLR	CPA	M	R									9				SALEABLE		34951-1210	34951-1220
KEY A, BLACK, W/CPA	33472-1291	A-BLK	GC	PLR	CPA	M	R	1				5	6	7	8				12	SALEABLE		34951-1210	34951-1220
KEY A, YELLOW, W/CPA	33472-1292	A-YW	GC	PLR	CPA	M	R													SALEABLE		34951-1210	34951-1220
KEY A, BLACK, W/CPA	33472-1293	A-BLK	GC	PLR	CPA	M	R	1												SALEABLE		34951-1210	34951-1220
KEY A, BLACK, W/CPA	33472-1294	A-BLK	GC	PLR	CPA	M	R				4			7	8					SALEABLE		34951-1210	34951-1220
KEY D, STONE GRAY, W/CPA	33472-1295	D-SG	GC	PLR	CPA	M	R								8		10		12	SALEABLE		34951-1210	34951-1220
KEY A, BLACK, W/CPA	33472-1296	A-BLK	GC	PLR	CPA	M	R								8	9	10	11		SALEABLE		34951-1210	34951-1220
KEY A, BLACK, W/CPA	33472-1297	A-BLK	GC	PLR	CPA	M	R	1	2	3	4	5	6			9	10	11	12	SALEABLE		34951-1210	34951-1220
KEY A, BLACK, WITH CLIPSLOT, W/O CPA	33472-1301	A-BLK-CLIP	GC	PLR		M	R													SALEABLE		N/A	N/A
KEY B, LIGHT GRAY, WITH CLIPSLOT, W/O CPA	33472-1302	B-LG-CLIP	GC	PLR		M	R													SALEABLE		N/A	N/A
KEY C, BROWN, WITH CLIPSLOT, W/O CPA	33472-1303	C-BR-CLIP	GC	PLR		M	R													NOT RECOMMENDED	SEE P/N 33472-1407	N/A	N/A
KEY D, GREEN, WITH CLIPSLOT, W/O CPA	33472-1304	D-GR-CLIP	GC	PLR		M	R													NOT RECOMMENDED	SEE P/N 33472-1408	N/A	N/A
VOID KEY	33472-1305																						
KEY A, BLACK, WITH CLIPSLOT, W/CPA	33472-1306	A-BLK-CLIP	GC	PLR	CPA	M	R													SALEABLE		N/A	N/A
KEY B, LIGHT GRAY, WITH CLIPSLOT, W/CPA	33472-1307	B-LG-CLIP	GC	PLR	CPA	M	R													SALEABLE		N/A	N/A
KEY C, BROWN, WITH CLIPSLOT, W/CPA	33472-1308	C-BR-CLIP	GC	PLR	CPA	M	R													NOT RECOMMENDED	SEE P/N 33472-1409	N/A	N/A
KEY D, GREEN, WITH CLIPSLOT, W/CPA	33472-1309	D-GR-CLIP	GC	PLR	CPA	M	R													NOT RECOMMENDED	SEE P/N 33472-1410	N/A	N/A
VOID KEY	33472-1310																						
KEY A, BLACK, WITH CLIPSLOT, W/O CPA	33472-1311	A-BLK-CLIP	GC	PLR		M	R	1	2	3	4	5	6	7	8	9	10	11	12	SALEABLE		N/A	N/A
KEY B, LIGHT GRAY, WITH CLIPSLOT, W/O CPA	33472-1312	B-LG-CLIP	GC	PLR		M	R	1	2	3	4	5	6	7	8	9	10	11	12	SALEABLE		N/A	N/A
KEY C, BROWN, WITH CLIPSLOT, W/O CPA	33472-1313	C-BR-CLIP	GC	PLR		M	R	1	2	3	4	5	6	7	8	9	10	11	12	NOT RECOMMENDED	SEE P/N 33472-1411	N/A	N/A
KEY D, GREEN, WITH CLIPSLOT, W/O CPA	33472-1314	D-GR-CLIP	GC	PLR		M	R	1	2	3	4	5	6	7	8	9	10	11	12	NOT RECOMMENDED	SEE P/N 33472-1412	N/A	N/A
VOID KEY	33472-1315																						
KEY A, BLACK, WITH CLIPSLOT, W/CPA	33472-1316	A-BLK-CLIP	GC	PLR	CPA	M	R	1	2	3	4	5	6	7	8	9	10	11	12	SALEABLE		N/A	N/A
KEY B, LIGHT GRAY, WITH CLIPSLOT, W/CPA	33472-1317	B-LG-CLIP	GC	PLR	CPA	M	R	1	2	3	4	5	6	7	8	9	10	11	12	SALEABLE		N/A	N/A
KEY C, BROWN, WITH CLIPSLOT, W/CPA	33472-1318	C-BR-CLIP	GC	PLR	CPA	M	R	1	2	3	4	5	6	7	8	9	10	11	12	NOT RECOMMENDED	SEE P/N 33472-1413	N/A	N/A
KEY D, GREEN, WITH CLIPSLOT, W/CPA	33472-1319	D-GR-CLIP	GC	PLR	CPA	M	R	1	2	3	4	5	6	7	8	9	10	11	12	NOT RECOMMENDED	SEE P/N 33472-1414	N/A	N/A
VOID KEY	33472-1320																						
KEY A, BLACK, WITH CLIPSLOT, W/O CPA	33472-1321	A-BLK-CLIP	GC	PLR		M	R		2	3					8			11		SALEABLE		N/A	N/A
KEY A, BLACK, WITH CLIPSLOT, W/O CPA	33472-1322	A-BLK-CLIP	GC	PLR		M	R		2	3		5	6	7	8			11		SALEABLE		N/A	N/A
KEY A, BLACK, WITH CLIPSLOT, W/O CPA	33472-1323	A-BLK-CLIP	GC	PLR		M	R						6	7						SALEABLE		N/A	N/A
KEY A, BLACK, WITH CLIPSLOT, W/O CPA	33472-1324	A-BLK-CLIP	GC	PLR		M	R		2	3			6	7	8		10	11		SALEABLE		N/A	N/A
KEY A, BLACK, WITH CLIPSLOT, W/O CPA	33472-1325	A-BLK-CLIP	GC	PLR		M	R	1				5	6	7	8					SALEABLE		N/A	N/A
KEY B, LIGHT GRAY, WITH CLIPSLOT, W/O CPA	33472-1326	B-LG-CLIP	GC	PLR		M	R	1				5	6	7	8	9	10			SALEABLE		N/A	N/A
KEY A, BLACK, WITH CLIPSLOT, W/O CPA	33472-1327	A-BLK-CLIP	GC	PLR		M	R		2											SALEABLE		N/A	N/A
KEY B, LIGHT GRAY, WITH CLIPSLOT, W/O CPA	33472-1328	B-LG-CLIP	GC	PLR		M	R		2							9	10			SALEABLE		N/A	N/A
KEY A, BLACK, WITH CLIPSLOT, W/O CPA	33472-1329	A-BLK-CLIP	GC	PLR		M	R		2	3					8	9	10	11		SALEABLE		N/A	N/A
KEY A, BLACK, WITH CLIPSLOT, W/O CPA	33472-1330	A-BLK-CLIP	GC	PLR		M	R							7	8	9	10	11		SALEABLE		N/A	N/A
KEY A, BLACK, WITH CLIPSLOT, W/O CPA	33472-1331	A-BLK-CLIP	GC	PLR		M	R							7	8					SALEABLE		N/A	N/A
KEY A, BLACK, WITH CLIPSLOT, W/O CPA	33472-1332	A-BLK-CLIP	GC	PLR		M	R		2							9	10			SALEABLE		N/A	N/A
KEY A, BLACK, WITH CLIPSLOT, W/O CPA	33472-1333	A-BLK-CLIP	GC	PLR		M	R		2		4									SALEABLE		N/A	N/A
KEY A, BLACK, WITH CLIPSLOT, W/CPA	33472-1334	A-BLK-CLIP	GC	PLR	CPA	M	R									9	10	11	12	SALEABLE		N/A	N/A
KEY A, BLACK, WITH CLIPSLOT, W/CPA	33472-1335	A-BLK-CLIP	GC	PLR	CPA	M	R											11		SALEABLE		N/A	N/A
KEY A, BLACK, WITH CLIPSLOT, W/O CPA	33472-1336	A-BLK-CLIP	GC	PLR		M	R		2	3	4			7	8					SALEABLE		N/A	N/A
KEY A, BLACK, WITH CLIPSLOT, W/O CPA	33472-1337	A-BLK-CLIP	GC	PLR		M	R	1		3	4	5	6	7	8					SALEABLE		N/A	N/A
KEY A, BLACK, WITH CLIPSLOT, W/CPA	33472-1338	A-BLK-CLIP	GC	PLR	CPA	M	R										10	11	12	SALEABLE		N/A	N/A

molex

MX150 RECEPTACLE 2X6 SEALED ASSEMBLY MAT SEAL
BOM AND PIN OUT SHEET

ASSEMBLY DESCRIPTION	ASSEMBLY PART NUMBER	COMPONENT						BLOCKED TERMINALS												STATUS	COMMENTS	OPTIONAL ATTATCHMENTS SOLD SEPERATELY	
		THE PRESENCE OF AN ABBREVIATION INDICATES THE PRESENCE OF THAT COMPONENT.						CAVITY WITH A NUMBER INDICATES BLOCKED TERMINAL POSITION CAVITY WITHOUT A NUMBER INDICATES OPEN TERMINAL POSITION															
		HOUSING KEY/COLOR	GROMMET CAP	PLR	CPA	MAT SEAL	RING SEAL	1	2	3	4	5	6	7	8	9	10	11	12			BACKSHELL WITH RIBS	BACKSHELL WITHOUT RIBS
KEY A, BLACK, WITH CLIPSLOT, W/O CPA	33472-1339	A-BLK-CLIP	GC	PLR		M	R				4	5	6	7	8	9				SALEABLE		N/A	N/A
KEY A, BLACK, WITH CLIPSLOT, W/O CPA	33472-1340	A-BLK-CLIP	GC	PLR		M	R						6	7	8					SALEABLE		N/A	N/A
KEY A, BLACK, WITH CLIPSLOT, W/O CPA	33472-1341	A-BLK-CLIP	GC	PLR		M	R		2		4	5			8		10	11		SALEABLE		N/A	N/A
KEY A, BLACK, WITH CLIPSLOT, W/O CPA	33472-1342	A-BLK-CLIP	GC	PLR		M	R			3	4					9	10			SALEABLE		N/A	N/A
KEY A, BLACK, WITH CLIPSLOT, W/O CPA	33472-1343	A-BLK-CLIP	GC	PLR		M	R	1					6	7						SALEABLE		N/A	N/A
KEY A, BLACK, WITH CLIPSLOT, W/O CPA	33472-1344	A-BLK-CLIP	GC	PLR		M	R											11		SALEABLE		N/A	N/A
KEY A, BLACK, WITH CLIPSLOT, W/O CPA	33472-1345	A-BLK-CLIP	GC	PLR		M	R							7						SALEABLE		N/A	N/A
KEY A, BLACK, WITH CLIPSLOT, W/O CPA	33472-1346	A-BLK-CLIP	GC	PLR		M	R		2	3	4	5					10	11	12	SALEABLE		N/A	N/A
KEY A, BLACK, WITH CLIPSLOT, W/O CPA	33472-1347	A-BLK-CLIP	GC	PLR		M	R	1					6	7		9				SALEABLE		N/A	N/A
KEY A, BLACK, WITH CLIPSLOT, W/O CPA	33472-1348	A-BLK-CLIP	GC	PLR		M	R		2	3	4	5	6	7	8		10	11	12	SALEABLE		N/A	N/A
KEY A, BLACK, WITH CLIPSLOT, W/CPA	33472-1349	A-BLK-CLIP	GC	PLR	CPA	M	R			3		5						11		SALEABLE		N/A	N/A
KEY A, BLACK, WITH CLIPSLOT, W/O CPA	33472-1350	A-BLK-CLIP	GC	PLR		M	R		2	3								11		SALEABLE		N/A	N/A
KEY A, BLACK, WITH CLIPSLOT, W/O CPA	33472-1351	A-BLK-CLIP	GC	PLR		M	R	1	2	3	4	5				9	10	11	12	SALEABLE		N/A	N/A
KEY A, BLACK, WITH CLIPSLOT, W/O CPA	33472-1352	A-BLK-CLIP	GC	PLR		M	R											11	12	SALEABLE		N/A	N/A
KEY A, BLACK, WITH CLIPSLOT, W/O CPA	33472-1353	A-BLK-CLIP	GC	PLR		M	R		2	3						9	10	11		SALEABLE		N/A	N/A
KEY A, BLACK, WITH CLIPSLOT, W/O CPA	33472-1354	A-BLK-CLIP	GC	PLR		M	R	1	2	3	4	5			8	9	10	11	12	SALEABLE		N/A	N/A
KEY A, BLACK, WITH CLIPSLOT, W/O CPA	33472-1355	A-BLK-CLIP	GC	PLR		M	R	1	2	3	4	5							12	SALEABLE		N/A	N/A
KEY A, BLACK, WITH CLIPSLOT, W/O CPA	33472-1356	A-BLK-CLIP	GC	PLR		M	R			3	4	5								SALEABLE		N/A	N/A
KEY A, BLACK, WITH CLIPSLOT, W/O CPA	33472-1357	A-BLK-CLIP	GC	PLR		M	R			3	4	5	6	7	8	9	10	11		SALEABLE		N/A	N/A
KEY A, BLACK, WITH CLIPSLOT, W/O CPA	33472-1358	A-BLK-CLIP	GC	PLR		M	R		2	3					8	9	10	11	12	SALEABLE		N/A	N/A
KEY A, BLACK, WITH CLIPSLOT, W/CPA	33472-1359	A-BLK-CLIP	GC	PLR	CPA	M	R					5			8	9		11		SALEABLE		N/A	N/A
KEY A, BLACK, WITH CLIPSLOT, W/O CPA	33472-1360	A-BLK-CLIP	GC	PLR		M	R		2	3					8	9				SALEABLE		N/A	N/A
KEY A, BLACK, WITH CLIPSLOT, W/O CPA	33472-1361	A-BLK-CLIP	GC	PLR		M	R	1	2	3								11	12	SALEABLE		N/A	N/A
KEY A, BLACK, WITH CLIPSLOT, W/O CPA	33472-1362	A-BLK-CLIP	GC	PLR		M	R	1	2	3	4		6		8		10	11	12	SALEABLE		N/A	N/A
KEY A, BLACK, WITH CLIPSLOT, W/O CPA	33472-1363	A-BLK-CLIP	GC	PLR		M	R		2		4		6		8		10	11	12	SALEABLE		N/A	N/A
KEY A, BLACK, WITH CLIPSLOT, W/O CPA	33472-1364	A-BLK-CLIP	GC	PLR		M	R											11	12	SALEABLE		N/A	N/A
KEY A, BLACK, WITH CLIPSLOT, W/O CPA	33472-1365	A-BLK-CLIP	GC	PLR		M	R	1	2	3	4	5	6			9				SALEABLE		N/A	N/A
KEY A, BLACK, WITH CLIPSLOT, W/O CPA	33472-1366	A-BLK-CLIP	GC	PLR		M	R						6			9				SALEABLE		N/A	N/A
KEY A, BLACK, WITH CLIPSLOT, W/O CPA	33472-1367	A-BLK-CLIP	GC	PLR		M	R		2					7	8	9				SALEABLE		N/A	N/A
KEY A, BLACK, WITH CLIPSLOT, W/O CPA	33472-1368	A-BLK-CLIP	GC	PLR		M	R			3	4	5	6	7						SALEABLE		N/A	N/A
KEY A, BLACK, WITH CLIPSLOT, W/O CPA	33472-1369	A-BLK-CLIP	GC	PLR		M	R	1	2	3	4	5	6	7					12	SALEABLE		N/A	N/A
KEY A, BLACK, WITH CLIPSLOT, W/O CPA	33472-1370	A-BLK-CLIP	GC	PLR		M	R	1	2	3	4	5		7	8	9	10	11		SALEABLE		N/A	N/A
KEY A, BLACK, WITH CLIPSLOT, W/O CPA	33472-1371	A-BLK-CLIP	GC	PLR		M	R		2		4		6		8		10	11		SALEABLE		N/A	N/A
KEY A, BLACK, WITH CLIPSLOT, W/O CPA	33472-1372	A-BLK-CLIP	GC	PLR		M	R								8					SALEABLE		N/A	N/A
KEY A, BLACK, WITH CLIPSLOT, W/O CPA	33472-1373	A-BLK-CLIP	GC	PLR		M	R	1		3	4	5	6	7	8		10	11	12	SALEABLE		N/A	N/A
KEY A, BLACK, WITH CLIPSLOT, W/O CPA	33472-1374	A-BLK-CLIP	GC	PLR		M	R						6			9	10	11	12	SALEABLE		N/A	N/A
KEY A, BLACK, WITH CLIPSLOT, W/O CPA	33472-1375	A-BLK-CLIP	GC	PLR		M	R												12	SALEABLE		N/A	N/A
KEY A, BLACK, WITH CLIPSLOT, W/O CPA	33472-1376	A-BLK-CLIP	GC	PLR		M	R						6						12	SALEABLE		N/A	N/A
KEY A, BLACK, WITH CLIPSLOT, W/O CPA	33472-1377	A-BLK-CLIP	GC	PLR		M	R	1	2			5	6	7	8			11	12	SALEABLE		N/A	N/A
KEY A, BLACK, WITH CLIPSLOT, W/O CPA	33472-1378	A-BLK-CLIP	GC	PLR		M	R									9				SALEABLE		N/A	N/A
KEY A, BLACK, WITH CLIPSLOT, W/O CPA	33472-1379	A-BLK-CLIP	GC	PLR		M	R			3	4					9	10	11	12	SALEABLE		N/A	N/A
KEY A, BLACK, WITH CLIPSLOT, W/O CPA	33472-1380	A-BLK-CLIP	GC	PLR		M	R	1	2	3	4	5	6	7	8	9			12	SALEABLE		N/A	N/A
KEY A, BLACK, WITH CLIPSLOT, W/O CPA	33472-1381	A-BLK-CLIP	GC	PLR		M	R	1	2			5	6	7	8					SALEABLE		N/A	N/A
KEY A, BLACK, WITH CLIPSLOT, W/O CPA	33472-1382	A-BLK-CLIP	GC	PLR		M	R				4				8		10			SALEABLE		N/A	N/A
KEY A, BLACK, WITH CLIPSLOT, W/O CPA	33472-1383	A-BLK-CLIP	GC	PLR		M	R	1	2	3	4	5	6			9	10	11	12	SALEABLE		N/A	N/A
KEY A, BLACK, WITH CLIPSLOT, W/O CPA	33472-1384	A-BLK-CLIP	GC	PLR		M	R	1			4							11		SALEABLE		N/A	N/A
KEY A, BLACK, WITH CLIPSLOT, W/O CPA	33472-1385	A-BLK-CLIP	GC	PLR		M	R									9	10	11	12	SALEABLE		N/A	N/A
KEY A, BLACK, WITH CLIPSLOT, W/O CPA	33472-1386	A-BLK-CLIP	GC	PLR		M	R	1	2	3	4	5	6	7	8				12	SALEABLE		N/A	N/A
KEY A, BLACK, WITH CLIPSLOT, W/O CPA	33472-1387	A-BLK-CLIP	GC	PLR		M	R	1	2				6	7	8				12	SALEABLE		N/A	N/A
KEY A, BLACK, WITH CLIPSLOT, W/O CPA	33472-1388	A-BLK-CLIP	GC	PLR		M	R	1	2					7	8					SALEABLE		N/A	N/A
KEY A, BLACK, WITH CLIPSLOT, W/O CPA	33472-1389	A-BLK-CLIP	GC	PLR		M	R	1					6	7	8				12	SALEABLE		N/A	N/A
KEY A, BLACK, WITH CLIPSLOT, W/O CPA	33472-1390	A-BLK-CLIP	GC	PLR		M	R							7	8				12	SALEABLE		N/A	N/A
KEY A, BLACK, WITH CLIPSLOT, W/O CPA	33472-1391	A-BLK-CLIP	GC	PLR		M	R		2		4			7	8	9	10			SALEABLE		N/A	N/A
KEY A, BLACK, WITH CLIPSLOT, W/O CPA	33472-1392	A-BLK-CLIP	GC	PLR		M	R			3		5	6	7	8	9	10	11	12	SALEABLE		N/A	N/A
KEY A, BLACK, WITH CLIPSLOT, W/O CPA	33472-1393	A-BLK-CLIP	GC	PLR		M	R			3				7		9	10	11	12	SALEABLE		N/A	N/A
KEY A, BLACK, WITH CLIPSLOT, W/O CPA	33472-1394	A-BLK-CLIP	GC	PLR		M	R										10	11	12	SALEABLE		N/A	N/A
KEY A, BLACK, WITH CLIPSLOT, W/O CPA	33472-1395	A-BLK-CLIP	GC	PLR		M	R	1	2	3	4		6	7	8	9	10		12	SALEABLE		N/A	N/A
KEY A, BLACK, WITH CLIPSLOT, W/O CPA	33472-1396	A-BLK-CLIP	GC	PLR		M	R	1	2	3	4			7	8	9	10			SALEABLE		N/A	N/A
KEY A, BLACK, WITH CLIPSLOT, W/O CPA	33472-1397	A-BLK-CLIP	GC	PLR		M	R						6		8	9	10	11	12	SALEABLE		N/A	N/A
KEY B, LIGHT GRAY, WITH CLIPSLOT, W/O CPA	33472-1398	B-LG-CLIP	GC	PLR		M	R										10	11	12	SALEABLE		N/A	N/A
KEY B, LIGHT GRAY, WITH CLIPSLOT, W/O CPA	33472-1399	B-LG-CLIP	GC	PLR		M	R						6	7			10	11	12	SALEABLE		N/A	N/A
KEY B, LIGHT GRAY, WITH CLIPSLOT, W/O CPA	33472-1400	B-LG-CLIP	GC	PLR		M	R	1	2	3	4	5	6	7			10	11	12	SALEABLE		N/A	N/A
KEY B, LIGHT GRAY, WITH CLIPSLOT, W/O CPA	33472-1401	B-LG-CLIP	GC	PLR		M	R	1	2	3	4	5	6			9	10	11	12	SALEABLE		N/A	N/A
KEY B, LIGHT GRAY, WITH CLIPSLOT, W/O CPA	33472-1402	B-LG-CLIP	GC	PLR		M	R											11	12	SALEABLE		N/A	N/A
KEY B, LIGHT GRAY, WITH CLIPSLOT, W/O CPA	33472-1403	B-LG-CLIP	GC	PLR		M	R					5	6			9	10	11	12	SALEABLE		N/A	N/A
KEY B, LIGHT GRAY, WITH CLIPSLOT, W/O CPA	33472-1404	B-LG-CLIP	GC	PLR		M	R					5	6			9	10			SALEABLE		N/A	N/A
KEY A, BLACK, WITH CLIPSLOT, W/O CPA	33472-1405	A-BLK-CLIP	GC	PLR		M	R								8	9	10	11	12	SALEABLE		N/A	N/A
KEY A, BLACK, WITH CLIPSLOT, W/O CPA	33472-1406	A-BLK-CLIP	GC	PLR		M	R								8	9		11		SALEABLE		N/A	N/A
KEY C, DARK GRAY, WITH CLIPSLOT, W/O CPA	33472-1407	C-DG-CLIP	GC	PLR		M	R													SALEABLE		N/A	N/A
KEY D, STONE GRAY, WITH CLIPSLOT, W/O CPA	33472-1408	D-SG-CLIP	GC	PLR		M	R													SALEABLE		N/A	N/A
KEY C, DARK GRAY, WITH CLIPSLOT, W/CPA	33472-1409	C-DG-CLIP	GC	PLR	CPA	M	R													SALEABLE		N/A	N/A
KEY D, STONE GRAY, WITH CLIPSLOT, W/CPA	33472-1410	D-SG-CLIP	GC	PLR	CPA	M	R													SALEABLE		N/A	N/A
KEY C, DARK GRAY, WITH CLIPSLOT, W/O CPA	33472-1411	C-DG-CLIP	GC	PLR		M	R	1	2	3	4	5	6	7	8	9	10	11	12	SALEABLE		N/A	N/A
KEY D, STONE GRAY, WITH CLIPSLOT, W/O CPA	33472-1412	D-SG-CLIP	GC	PLR		M	R	1	2	3	4	5	6	7	8	9	10	11	12	SALEABLE		N/A	N/A
KEY C, DARK GRAY, WITH CLIPSLOT, W/CPA	33472-1413	C-DG-CLIP	GC	PLR	CPA	M	R	1	2	3	4	5	6	7	8	9	10	11	12	SALEABLE		N/A	N/A
KEY D, STONE GRAY, WITH CLIPSLOT, W/CPA	33472-1414	D-SG-CLIP	GC	PLR	CPA	M	R	1	2	3	4	5	6	7	8	9	10	11	12	SALEABLE		N/A	N/A
KEY A, BLACK, WITH CLIPSLOT, W/O CPA	33472-1415	A-BLK-CLIP	GC	PLR		M	R	1	2	3					8		10	11	12	SALEABLE		N/A	N/A
KEY A, BLACK, WITH CLIPSLOT, W/O CPA	33472-1416	A-BLK-CLIP	GC	PLR		M	R			3		5	6		8	9	10	11	12	SALEABLE		N/A	N/A
KEY A, BLACK, WITH CLIPSLOT, W/O CPA	33472-1417	A-BLK-CLIP	GC	PLR		M	R		2	3			6	7	8	9	10	11	12	SALEABLE		N/A	N/A
KEY A, BLACK, WITH CLIPSLOT, W/O CPA	33472-1418	A-BLK-CLIP	GC	PLR		M	R			3	4	5	6		8	9	10	11		SALEABLE		N/A	N/A
KEY A, BLACK, WITH CLIPSLOT, W/O CPA	33472-1419	A-BLK-CLIP	GC	PLR		M	R								8	9				SALEABLE		N/A	N/A

molex

MX150 RECEPTACLE 2X6 SEALED ASSEMBLY MAT SEAL
BOM AND PIN OUT SHEET

ASSEMBLY DESCRIPTION	ASSEMBLY PART NUMBER	COMPONENT						BLOCKED TERMINALS												STATUS	COMMENTS	OPTIONAL ATTATCHMENTS SOLD SEPERATELY	
		THE PRESENCE OF AN ABBREVIATION INDICATES THE PRESENCE OF THAT COMPONENT.						CAVITY WITH A NUMBER INDICATES BLOCKED TERMINAL POSITION CAVITY WITHOUT A NUMBER INDICATES OPEN TERMINAL POSITION															
		HOUSING KEY/COLOR	GROMMET CAP	PLR	CPA	MAT SEAL	RING SEAL	1	2	3	4	5	6	7	8	9	10	11	12			BACKSHELL WITH RIBS	BACKSHELL WITHOUT RIBS
KEY A, BLACK, WITH CLIPSLOT, W/O CPA	33472-1420	A-BLK-CLIP	GC	PLR		M	R			3	4	5	6	7	8	9	10	11	12	SALEABLE		N/A	N/A
KEY A, BLACK, WITH CLIPSLOT, W/O CPA	33472-1421	A-BLK-CLIP	GC	PLR		M	R	1	2											SALEABLE		N/A	N/A
KEY A, BLACK, WITH CLIPSLOT, W/O CPA	33472-1422	A-BLK-CLIP	GC	PLR		M	R	1	2	3	4	5	6	7	8					SALEABLE		N/A	N/A
KEY A, BLACK, WITH CLIPSLOT, W/O CPA	33472-1423	A-BLK-CLIP	GC	PLR		M	R	1	2	3	4	5	6	7	8	9				SALEABLE		N/A	N/A
KEY A, BLACK, WITH CLIPSLOT, W/O CPA	33472-1424	A-BLK-CLIP	GC	PLR		M	R	1	2	3			6	7	8		10	11	12	SALEABLE		N/A	N/A
KEY A, BLACK, WITH CLIPSLOT, W/O CPA	33472-1425	A-BLK-CLIP	GC	PLR		M	R				4						10			SALEABLE		N/A	N/A
KEY A, BLACK, WITH CLIPSLOT, W/O CPA	33472-1426	A-BLK-CLIP	GC	PLR		M	R	1							8		10	11		SALEABLE		N/A	N/A
KEY C, BROWN, WITH CLIPSLOT, W/O CPA	33472-1427	C-BR-CLIP	GC	PLR		M	R	1	2			5	6							NOT RECOMMENDED	SEE P/N 33472-1433	N/A	N/A
KEY C, BROWN, WITH CLIPSLOT, W/O CPA	33472-1428	C-BR-CLIP	GC	PLR		M	R			3	4									NOT RECOMMENDED	SEE P/N 33472-1434	N/A	N/A
KEY C, BROWN, WITH CLIPSLOT, W/O CPA	33472-1429	C-BR-CLIP	GC	PLR		M	R	1	2	3	4									NOT RECOMMENDED	SEE P/N 33472-1435	N/A	N/A
KEY C, BROWN, WITH CLIPSLOT, W/O CPA	33472-1430	C-BR-CLIP	GC	PLR		M	R	1	2	3	4	5	6							NOT RECOMMENDED	SEE P/N 33472-1436	N/A	N/A
KEY A, BLACK, WITH CLIPSLOT, W/CPA	33472-1431	A-BLK-CLIP	GC	PLR	CPA	M	R							7	8					SALEABLE		N/A	N/A
KEY A, BLACK, WITH CLIPSLOT, W/O CPA	33472-1432	A-BLK-CLIP	GC	PLR		M	R			3	4	5	6			9	10	11		SALEABLE		N/A	N/A
KEY C, DARK GRAY, WITH CLIPSLOT, W/O CPA	33472-1433	C-DG-CLIP	GC	PLR		M	R	1	2			5	6							SALEABLE		N/A	N/A
KEY C, DARK GRAY, WITH CLIPSLOT, W/O CPA	33472-1434	C-DG-CLIP	GC	PLR		M	R			3	4									SALEABLE		N/A	N/A
KEY C, DARK GRAY, WITH CLIPSLOT, W/O CPA	33472-1435	C-DG-CLIP	GC	PLR		M	R	1	2	3	4									SALEABLE		N/A	N/A
KEY C, DARK GRAY, WITH CLIPSLOT, W/O CPA	33472-1436	C-DG-CLIP	GC	PLR		M	R	1	2	3	4	5	6							SALEABLE		N/A	N/A
KEY A, BLACK, WITH CLIPSLOT, W/O CPA	33472-1437	A-BLK-CLIP	GC	PLR		M	R								8	9	10		12	SALEABLE		N/A	N/A
KEY A, BLACK, WITH CLIPSLOT, W/O CPA	33472-1438	A-BLK-CLIP	GC	PLR		M	R	1	2		4			7	8		10		12	SALEABLE		N/A	N/A
KEY A, BLACK, WITH CLIPSLOT, W/O CPA	33472-1439	A-BLK-CLIP	GC	PLR		M	R		2	3		5						11		SALEABLE		N/A	N/A
KEY A, BLACK, WITH CLIPSLOT, W/O CPA	33472-1440	A-BLK-CLIP	GC	PLR		M	R	1	2	3						9		11		SALEABLE		N/A	N/A
KEY A, BLACK, WITH CLIPSLOT, W/O CPA	33472-1441	A-BLK-CLIP	GC	PLR		M	R	1	2	3		5				9		11		SALEABLE		N/A	N/A
KEY A, BLACK, WITH CLIPSLOT, W/O CPA	33472-1442	A-BLK-CLIP	GC	PLR		M	R	1	2	3	4	5		7	8					SALEABLE		N/A	N/A
KEY A, BLACK, WITH CLIPSLOT, W/O CPA	33472-1443	A-BLK-CLIP	GC	PLR		M	R					5			8					SALEABLE		N/A	N/A
KEY A, BLACK, WITH CLIPSLOT, W/O CPA	33472-1444	A-BLK-CLIP	GC	PLR		M	R		2			5				9				SALEABLE		N/A	N/A
KEY A, BLACK, WITH CLIPSLOT, W/O CPA	33472-1445	A-BLK-CLIP	GC	PLR		M	R		2			5		7		9			12	SALEABLE		N/A	N/A
KEY A, BLACK, WITH CLIPSLOT, W/O CPA	33472-1446	A-BLK-CLIP	GC	PLR		M	R		2							9				SALEABLE		N/A	N/A
KEY A, BLACK, WITH CLIPSLOT, W/O CPA	33472-1447	A-BLK-CLIP	GC	PLR		M	R	1	2	3	4		6					11	12	SALEABLE		N/A	N/A
KEY B, LIGHT GRAY, WITH CLIPSLOT, W/O CPA	33472-1448	B-LG-CLIP	GC	PLR		M	R	1	2	3	4	5			8	9	10	11	12	SALEABLE		N/A	N/A
KEY B, LIGHT GRAY, WITH CLIPSLOT, W/O CPA	33472-1449	B-LG-CLIP	GC	PLR		M	R					5			8					SALEABLE		N/A	N/A
KEY B, LIGHT GRAY, WITH CLIPSLOT, W/O CPA	33472-1450	B-LG-CLIP	GC	PLR		M	R					5			8	9	10	11	12	SALEABLE		N/A	N/A
KEY B, LIGHT GRAY, WITH CLIPSLOT, W/O CPA	33472-1451	B-LG-CLIP	GC	PLR		M	R					5			8			11	12	SALEABLE		N/A	N/A
KEY A, BLACK, WITH CLIPSLOT, W/CPA	33472-1452	A-BLK-CLIP	GC	PLR	CPA	M	R											11	12	SALEABLE		N/A	N/A
KEY A, BLACK, WITH CLIPSLOT, W/O CPA	33472-1453	A-BLK-CLIP	GC	PLR		M	R		2						8					SALEABLE		N/A	N/A
KEY A, BLACK, WITH CLIPSLOT, W/O CPA	33472-1456	A-BLK-CLIP	GC	PLR		M	R		2		4				8		10			SALEABLE		N/A	N/A
KEY A, BLACK, WITH CLIPSLOT, W/O CPA	33472-1457	A-BLK-CLIP	GC	PLR		M	R	1	2	3	4	5	6		8		10	11	12	SALEABLE		N/A	N/A
KEY A, BLACK, WITH CLIPSLOT, W/O CPA	33472-1458	A-BLK-CLIP	GC	PLR		M	R	1		3		5	6		8	9	10	11	12	SALEABLE		N/A	N/A
KEY A, BLACK, WITH CLIPSLOT, W/O CPA	33472-1459	A-BLK-CLIP	GC	PLR		M	R				4	5	6	7	8	9	10	11	12	SALEABLE		N/A	N/A
KEY A, BLACK, WITH CLIPSLOT, W/O CPA	33472-1460	A-BLK-CLIP	GC	PLR		M	R				4			7	8	9	10	11	12	SALEABLE		N/A	N/A
KEY A, BLACK, WITH CLIPSLOT, W/O CPA	33472-1461	A-BLK-CLIP	GC	PLR		M	R	1	2	3	4	5	6		8	9	10	11	12	SALEABLE		N/A	N/A
KEY A, BLACK, W/O CPA	33472-1462	A-BLK	GC	PLR		M	R				4					9	10	11	12	SALEABLE		34951-1210	34951-1220
KEY A, BLACK, W/O CPA	33472-1463	A-BLK	GC	PLR		M	R												12	SALEABLE		34951-1210	34951-1220
KEY A, BLACK, W/O CPA	33472-1464	A-BLK	GC	PLR		M	R	1	2	3	4	5	6	7	8	9	10			SALEABLE		34951-1210	34951-1220
KEY A, BLACK, W/CPA	33472-1465	A-BLK	GC	PLR	CPA	M	R					5				9		11	12	SALEABLE		34951-1210	34951-1220
KEY A, BLACK, W/CPA	33472-1466	A-BLK	GC	PLR	CPA	M	R	1	2	3										SALEABLE		34951-1210	34951-1220
KEY A, BLACK, W/CPA	33472-1467	A-BLK	GC	PLR	CPA	M	R	1	2				6	7				11	12	SALEABLE		34951-1210	34951-1220
KEY A, BLACK, W/CPA	33472-1468	A-BLK	GC	PLR	CPA	M	R						6	7	8	9	10	11	12	SALEABLE		34951-1210	34951-1220
KEY A, BLACK, WITH CLIPSLOT, W/O CPA	33472-1469	A-BLK-CLIP	GC	PLR		M	R					5	6	7			10		12	SALEABLE		N/A	N/A
KEY A, BLACK, WITH CLIPSLOT, W/O CPA	33472-1470	A-BLK-CLIP	GC	PLR		M	R	1	2		4	5	6	7					12	SALEABLE		N/A	N/A
KEY B, LIGHT GRAY, W/CPA	33472-1471	B-LG	GC	PLR	CPA	M	R					5								SALEABLE		34951-1210	34951-1220
KEY A, BLACK, WITH CLIPSLOT, W/O CPA	33472-1472	A-BLK-CLIP	GC	PLR		M	R							7	8			11		SALEABLE		N/A	N/A
KEY A, BLACK, WITH CLIPSLOT, W/O CPA	33472-1473	A-BLK-CLIP	GC	PLR		M	R	1	2	3	4			7	8	9	10	11		SALEABLE		N/A	N/A
KEY A, BLACK, WITH CLIPSLOT, W/O CPA	33472-1474	A-BLK-CLIP	GC	PLR		M	R					5	6	7		9	10		12	SALEABLE		N/A	N/A
KEY A, BLACK, W/CPA	33472-1475	A-BLK	GC	PLR	CPA	M	R		2	3	4					9				SALEABLE		34951-1210	34951-1220
KEY A, BLACK, W/CPA	33472-1476	A-BLK	GC	PLR	CPA	M	R		2	3	4					9	10	11		SALEABLE		34951-1210	34951-1220
KEY A, BLACK, WITH CLIPSLOT, W/O CPA	33472-1477	A-BLK-CLIP	GC	PLR		M	R					5								SALEABLE		N/A	N/A
KEY A, BLACK, WITH CLIPSLOT, W/O CPA	33472-1478	A-BLK-CLIP	GC	PLR		M	R			3	4		6							SALEABLE		N/A	N/A
KEY A, BLACK, WITH CLIPSLOT, W/O CPA	33472-1479	A-BLK-CLIP	GC	PLR		M	R						6							SALEABLE		N/A	N/A
KEY A, BLACK, WITH CLIPSLOT, W/O CPA	33472-1480	A-BLK-CLIP	GC	PLR		M	R	1	2		4	5	6	7		9	10	11	12	SALEABLE		N/A	N/A
KEY A, BLACK, WITH CLIPSLOT, W/O CPA	33472-1481	A-BLK-CLIP	GC	PLR		M	R					5			8	9				SALEABLE		N/A	N/A
KEY A, BLACK, WITH CLIPSLOT, W/O CPA	33472-1482	A-BLK-CLIP	GC	PLR		M	R					5		7	8	9				SALEABLE		N/A	N/A
KEY A, BLACK, W/CPA	33472-1483	A-BLK	GC	PLR	CPA	M	R				4									SALEABLE		34951-1210	34951-1220
KEY A, BLACK, W/O CPA	33472-1484	A-BLK	GC	PLR		M	R							7	8	9	10	11	12	SALEABLE		34951-1210	34951-1220
KEY A, BLACK, W/O CPA	33472-1485	A-BLK	GC	PLR		M	R				4	5				9	10	11	12	SALEABLE		34951-1210	34951-1220
KEY A, BLACK, W/CPA	33472-1486	A-BLK	GC	PLR	CPA	M	R	1		3		5			8		10		12	SALEABLE		34951-1210	34951-1220
KEY A, BLACK, W/CPA	33472-1487	A-BLK	GC	PLR	CPA	M	R		2		4		6	7		9		11		SALEABLE		34951-1210	34951-1220
KEY A, BLACK, WITH CLIPSLOT, W/O CPA	33472-1488	A-BLK-CLIP	GC	PLR		M	R			3			6	7	8	9	10	11	12	SALEABLE		N/A	N/A
KEY A, BLACK, WITH CLIPSLOT, W/O CPA	33472-1489	A-BLK-CLIP	GC	PLR		M	R			3				7	8	9				SALEABLE		N/A	N/A
KEY A, BLACK, WITH CLIPSLOT, W/O CPA	33472-1490	A-BLK-CLIP	GC	PLR		M	R			3			6			9	10	11	12	SALEABLE		N/A	N/A
KEY A, BLACK, WITH CLIPSLOT, W/O CPA	33472-1491	A-BLK-CLIP	GC	PLR		M	R						6	7	8		10	11	12	SALEABLE		N/A	N/A
KEY A, BLACK, WITH CLIPSLOT, W/O CPA	33472-1492	A-BLK-CLIP	GC	PLR		M	R						6				10	11	12	SALEABLE		N/A	N/A
KEY A, BLACK, WITH CLIPSLOT, W/O CPA	33472-1493	A-BLK-CLIP	GC	PLR		M	R			3						9				SALEABLE		N/A	N/A
KEY A, BLACK, WITH CLIPSLOT, W/O CPA	33472-1494	A-BLK-CLIP	GC	PLR		M	R					5	6	7			10	11		SALEABLE		N/A	N/A
KEY A, BLACK, WITH CLIPSLOT, W/O CPA	33472-1495	A-BLK-CLIP	GC	PLR		M	R		2				6				10	11		SALEABLE		N/A	N/A
KEY A, BLACK, WITH CLIPSLOT, W/O CPA	33472-1496	A-BLK-CLIP	GC	PLR		M	R		2				6		8			11		SALEABLE		N/A	N/A
KEY A, BLACK, WITH CLIPSLOT, W/O CPA	33472-1497	A-BLK-CLIP	GC	PLR		M	R	1					6	7					12	SALEABLE		N/A	N/A
KEY A, BLACK, WITH CLIPSLOT, W/O CPA	33472-1498	A-BLK-CLIP	GC	PLR		M	R	1		3	4	5	6		8		10	11	12	SALEABLE		N/A	N/A
KEY A, BLACK, WITH CLIPSLOT, W/O CPA	33472-1499	A-BLK-CLIP	GC	PLR		M	R	1		3		5						11	12	SALEABLE		N/A	N/A
KEY A, BLACK, WITH CLIPSLOT, W/O CPA	33472-1500	A-BLK-CLIP	GC	PLR		M	R				4	5	6		8		10	11		SALEABLE		N/A	N/A
KEY A, BLACK, WITH CLIPSLOT, W/O CPA	33472-1501	A-BLK-CLIP	GC	PLR		M	R	1		3		5			8		10	11	12	SALEABLE		N/A	N/A
KEY A, BLACK, WITH CLIPSLOT, W/O CPA	33472-1502	A-BLK-CLIP	GC	PLR		M	R				4	5	6		8		10			SALEABLE		N/A	N/A

molex

MX150 RECEPTACLE 2X6 SEALED ASSEMBLY MAT SEAL
BOM AND PIN OUT SHEET

ASSEMBLY DESCRIPTION	ASSEMBLY PART NUMBER	COMPONENT						BLOCKED TERMINALS												STATUS	COMMENTS	OPTIONAL ATTATCHMENTS SOLD SEPERATELY	
		THE PRESENCE OF AN ABBREVIATION INDICATES THE PRESENCE OF THAT COMPONENT.						CAVITY WITH A NUMBER INDICATES BLOCKED TERMINAL POSITION CAVITY WITHOUT A NUMBER INDICATES OPEN TERMINAL POSITION															
		HOUSING KEY/COLOR	GROMMET CAP	PLR	CPA	MAT SEAL	RING SEAL	1	2	3	4	5	6	7	8	9	10	11	12			BACKSHELL WITH RIBS	BACKSHELL WITHOUT RIBS
KEY A, BLACK, WITH CLIPSLOT, W/O CPA	33472-1503	A-BLK-CLIP	GC	PLR		M	R				4	5			8		10			SALEABLE		N/A	N/A
KEY A, BLACK, WITH CLIPSLOT, W/O CPA	33472-1504	A-BLK-CLIP	GC	PLR		M	R	1	2	3	4		6				10	11	12	SALEABLE		N/A	N/A
KEY A, BLACK, WITH CLIPSLOT, W/O CPA	33472-1505	A-BLK-CLIP	GC	PLR		M	R			3	4							11	12	SALEABLE		N/A	N/A
KEY B, LIGHT GRAY, WITH CLIPSLOT, W/O CPA	33472-1506	B-LG-CLIP	GC	PLR		M	R	1						7				11		SALEABLE		N/A	N/A
KEY B, LIGHT GRAY, WITH CLIPSLOT, W/O CPA	33472-1507	B-LG-CLIP	GC	PLR		M	R							7				11		SALEABLE		N/A	N/A
KEY A, BLACK, WITH CLIPSLOT, W/O CPA	33472-1508	A-BLK-CLIP	GC	PLR		M	R	1					6	7	8	9				SALEABLE		N/A	N/A
KEY A, BLACK, WITH CLIPSLOT, W/O CPA	33472-1509	A-BLK-CLIP	GC	PLR		M	R				4		6		8					SALEABLE		N/A	N/A
KEY A, BLACK, WITH CLIPSLOT, W/O CPA	33472-1510	A-BLK-CLIP	GC	PLR		M	R		2		4				8	9	10			SALEABLE		N/A	N/A
KEY A, BLACK, WITH CLIPSLOT, W/O CPA	33472-1511	A-BLK-CLIP	GC	PLR		M	R									9	10			SALEABLE		N/A	N/A
KEY A, BLACK, WITH CLIPSLOT, W/O CPA	33472-1512	A-BLK-CLIP	GC	PLR		M	R		2	3	4				8	9		11		SALEABLE		N/A	N/A
KEY A, BLACK, WITH CLIPSLOT, W/O CPA	33472-1513	A-BLK-CLIP	GC	PLR		M	R					5					10	11		SALEABLE		N/A	N/A
KEY A, BLACK, WITH CLIPSLOT, W/O CPA	33472-1514	A-BLK-CLIP	GC	PLR		M	R				4	5		7				11	12	SALEABLE		N/A	N/A
KEY A, BLACK, WITH CLIPSLOT, W/O CPA	33472-1515	A-BLK-CLIP	GC	PLR		M	R	1	2	3	4		6	7	8	9	10	11		SALEABLE		N/A	N/A
KEY A, BLACK, WITH CLIPSLOT, W/O CPA	33472-1516	A-BLK-CLIP	GC	PLR		M	R				4		6		8		10	11		SALEABLE		N/A	N/A
KEY A, BLACK, WITH CLIPSLOT, W/O CPA	33472-1517	A-BLK-CLIP	GC	PLR		M	R	1	2	3	4	5	6		8	9				SALEABLE		N/A	N/A
KEY A, BLACK, WITH CLIPSLOT, W/O CPA	33472-1518	A-BLK-CLIP	GC	PLR		M	R		2		4		6		8					SALEABLE		N/A	N/A
KEY A, BLACK, WITH CLIPSLOT, W/O CPA	33472-1519	A-BLK-CLIP	GC	PLR		M	R	1		3	4							11	12	SALEABLE		N/A	N/A
KEY A, BLACK, WITH CLIPSLOT, W/O CPA	33472-1520	A-BLK-CLIP	GC	PLR		M	R	1		3	4							11		SALEABLE		N/A	N/A
KEY A, BLACK, WITH CLIPSLOT, W/O CPA	33472-1521	A-BLK-CLIP	GC	PLR		M	R		2						8	9	10	11	12	SALEABLE		N/A	N/A
KEY A, BLACK, WITH CLIPSLOT, W/O CPA	33472-1522	A-BLK-CLIP	GC	PLR		M	R							7	8	9	10			SALEABLE		N/A	N/A
KEY A, BLACK, WITH CLIPSLOT, W/O CPA	33472-1523	A-BLK-CLIP	GC	PLR		M	R							7	8	9	10		12	SALEABLE		N/A	N/A
KEY A, BLACK, W/O CPA	33472-1524	A-BLK	GC	PLR		M	R		2	3		5	6	7		9	10	11	12	SALEABLE		34951-1210	34951-1220
KEY A, BLACK, W/O CPA	33472-1525	A-BLK	GC	PLR		M	R	1	2	3	4				8	9				SALEABLE		34951-1210	34951-1220
KEY A, BLACK, W/O CPA	33472-1526	A-BLK	GC	PLR		M	R		2	3						9				SALEABLE		34951-1210	34951-1220
KEY A, BLACK, W/O CPA	33472-1527	A-BLK	GC	PLR		M	R								8		10	11		SALEABLE		34951-1210	34951-1220
KEY A, BLACK, WITH CLIPSLOT, W/O CPA	33472-1528	A-BLK-CLIP	GC	PLR		M	R	1		3		5						11		SALEABLE		N/A	N/A
KEY A, BLACK, W/O CPA	33472-1529	A-BLK	GC	PLR		M	R	1		3		5			8		10	11		SALEABLE		34951-1210	34951-1220
KEY A, BLACK, WITH CLIPSLOT, W/O CPA	33472-1530	A-BLK-CLIP	GC	PLR		M	R		2					7	8					SALEABLE		N/A	N/A
KEY A, BLACK, WITH CLIPSLOT, W/O CPA	33472-1531	A-BLK-CLIP	GC	PLR		M	R	1			4			7				11		SALEABLE		N/A	N/A
KEY A, BLACK, WITH CLIPSLOT, W/O CPA	33472-1532	A-BLK-CLIP	GC	PLR		M	R		2	3		5	6	7		9	10	11	12	SALEABLE		N/A	N/A
KEY A, BLACK, WITH CLIPSLOT, W/O CPA	33472-1533	A-BLK-CLIP	GC	PLR		M	R	1	2	3	4				8	9				SALEABLE		N/A	N/A
KEY A, BLACK, WITH CLIPSLOT, W/O CPA	33472-1534	A-BLK-CLIP	GC	PLR		M	R		2	3						9				SALEABLE		N/A	N/A
KEY A, BLACK, WITH CLIPSLOT, W/O CPA	33472-1535	A-BLK-CLIP	GC	PLR		M	R								8		10	11		SALEABLE		N/A	N/A
KEY A, BLACK, WITH CLIPSLOT, W/O CPA	33472-1536	A-BLK-CLIP	GC	PLR		M	R	1		3		5			8		10	11		SALEABLE		N/A	N/A
KEY A, BLACK, W/O CPA	33472-1537	A-BLK	GC	PLR		M	R	1					6	7	8	9	10			SALEABLE		34951-1210	34951-1220
KEY A, BLACK, WITH CLIPSLOT, W/O CPA	33472-1538	A-BLK-CLIP	GC	PLR		M	R							7		9	10			SALEABLE		N/A	N/A
KEY B, LIGHT GRAY, W/O CPA	33472-1539	B-LG	GC	PLR		M	R							7	8	9			12	SALEABLE		34951-1210	34951-1220
KEY A, BLACK, WITH CLIPSLOT, W/O CPA	33472-1540	A-BLK-CLIP	GC	PLR		M	R	1					6	7	8	9	10			SALEABLE		N/A	N/A
KEY A, BLACK, WITH CLIPSLOT, W/O CPA	33472-1541	A-BLK-CLIP	GC	PLR		M	R	1			4		6	7	8	9	10	11		SALEABLE		N/A	N/A
KEY A, BLACK, WITH CLIPSLOT, W/O CPA	33472-1542	A-BLK-CLIP	GC	PLR		M	R	1	2	3		5	6	7	8	9	10		12	SALEABLE		N/A	N/A
KEY A, BLACK, WITH CLIPSLOT, W/O CPA	33472-1543	A-BLK-CLIP	GC	PLR		M	R		2		4		6	7	8	9	10	11	12	SALEABLE		N/A	N/A
KEY A, BLACK, WITH CLIPSLOT, W/O CPA	33472-1544	A-BLK-CLIP	GC	PLR		M	R			3	4					9	10	11	12	SALEABLE		N/A	N/A
KEY A, BLACK, WITH CLIPSLOT, W/O CPA	33472-1545	A-BLK-CLIP	GC	PLR		M	R			3	4							11	12	SALEABLE		N/A	N/A
KEY A, BLACK, WITH CLIPSLOT, W/O CPA	33472-1546	A-BLK-CLIP	GC	PLR		M	R	1	2			5	6	7	8	9	10			SALEABLE		N/A	N/A
KEY A, BLACK, WITH CLIPSLOT, W/O CPA	33472-1547	A-BLK-CLIP	GC	PLR		M	R									9	10			SALEABLE		N/A	N/A
KEY A, BLACK, W/CPA	33472-1548	A-BLK	GC	PLR	CPA	M	R					5								SALEABLE		34951-1210	34951-1220
KEY A, BLACK, W/CPA	33472-1549	A-BLK	GC	PLR	CPA	M	R						6						12	SALEABLE		34951-1210	34951-1220
KEY A, BLACK, WITH CLIPSLOT, W/O CPA	33472-1550	A-BLK-CLIP	GC	PLR		M	R										10	11	12	SALEABLE		N/A	N/A
KEY A, BLACK, WITH CLIPSLOT, W/O CPA	33472-1551	A-BLK-CLIP	GC	PLR		M	R									9				SALEABLE		N/A	N/A
KEY A, BLACK, WITH CLIPSLOT, W/O CPA	33472-1552	A-BLK-CLIP	GC	PLR		M	R		2						8	9	10	11	12	SALEABLE		N/A	N/A
KEY A, BLACK, WITH CLIPSLOT, W/O CPA	33472-1553	A-BLK-CLIP	GC	PLR		M	R		2						8	9				SALEABLE		N/A	N/A
KEY A, BLACK, W/O CPA	33472-1554	A-BLK	GC	PLR		M	R							7	8	9	10	11	12	SALEABLE	SEE P/N 33472-1484	34951-1210	34951-1220
KEY A, BLACK, W/CPA	33472-1555	A-BLK	GC	PLR	CPA	M	R							7	8	9	10	11	12	SALEABLE		34951-1210	34951-1220
KEY A, BLACK, WITH CLIPSLOT, W/O CPA	33472-1556	A-BLK-CLIP	GC	PLR		M	R					5					10	11		SALEABLE		N/A	N/A
KEY A, BLACK, WITH CLIPSLOT, W/O CPA	33472-1557	A-BLK-CLIP	GC	PLR		M	R	1			4	5			8		10		12	SALEABLE		N/A	N/A
KEY A, BLACK, WITH CLIPSLOT, W/O CPA	33472-1558	A-BLK-CLIP	GC	PLR		M	R	1	2	3	4					9	10	11	12	SALEABLE		N/A	N/A
KEY A, BLACK, WITH CLIPSLOT, W/CPA	33472-1559	A-BLK-CLIP	GC	PLR	CPA	M	R	1	2	3	4	5	6	7	8					SALEABLE		N/A	N/A
KEY A, BLACK, WITH CLIPSLOT, W/O CPA	33472-1560	A-BLK-CLIP	GC	PLR		M	R		2								10	11	12	SALEABLE		N/A	N/A
KEY A, BLACK, WITH CLIPSLOT, W/O CPA	33472-1561	A-BLK-CLIP	GC	PLR		M	R										10			SALEABLE		N/A	N/A
KEY A, BLACK, W/O CPA	33472-1562	A-BLK	GC	PLR		M	R	1				5	6	7	8				12	SALEABLE		34951-1210	34951-1220
KEY A, BLACK, W/O CPA	33472-1563	A-BLK	GC	PLR		M	R	1	2	3		5	6	7	8		10	11	12	SALEABLE		34951-1210	34951-1220
KEY A, BLACK, WITH CLIPSLOT, W/O CPA	33472-1564	A-BLK-CLIP	GC	PLR		M	R							7	8	9			12	SALEABLE		N/A	N/A
KEY B, LIGHT GRAY, WITH CLIPSLOT, W/O CPA	33472-1565	B-LG-CLIP	GC	PLR		M	R					5			8	9	10			SALEABLE		N/A	N/A
KEY B, LIGHT GRAY, WITH CLIPSLOT, W/O CPA	33472-1566	B-LG-CLIP	GC	PLR		M	R								8					SALEABLE		N/A	N/A
KEY A, BLACK, WITH CLIPSLOT, W/O CPA	33472-1567	A-BLK-CLIP	GC	PLR		M	R				4	5		7	8	9	10	11	12	SALEABLE		N/A	N/A
KEY A, BLACK, W/CPA	33472-1568	A-BLK	GC	PLR	CPA	M	R								8					SALEABLE		34951-1210	34951-1220
KEY A, BLACK, W/CPA	33472-1569	A-BLK	GC	PLR	CPA	M	R	1	2	3	4		6		8	9	10	11	12	SALEABLE		34951-1210	34951-1220
KEY A, BLACK, W/CPA	33472-1570	A-BLK	GC	PLR	CPA	M	R	1	2	3			6		8			11	12	SALEABLE		34951-1210	34951-1220
KEY A, BLACK, WITH CLIPSLOT, W/O CPA	33472-1571	A-BLK-CLIP	GC	PLR		M	R				4	5		7	8		10	11	12	SALEABLE		N/A	N/A
KEY A, BLACK, W/O CPA	33472-1572	A-BLK	GC	PLR		M	R		2	3		5	6	7	8		10	11	12	SALEABLE		34951-1210	34951-1220
KEY A, BLACK, W/O CPA	33472-1573	A-BLK	GC	PLR		M	R	1			4					9	10	11	12	SALEABLE		34951-1210	34951-1220
KEY A, BLACK, W/O CPA	33472-1574	A-BLK	GC	PLR		M	R				4	5								SALEABLE		34951-1210	34951-1220
KEY A, BLACK, W/O CPA	33472-1575	A-BLK	GC	PLR		M	R										10	11	12	SALEABLE		34951-1210	34951-1220
KEY A, BLACK, W/O CPA	33472-1576	A-BLK	GC	PLR		M	R		2			5			8	9	10	11		SALEABLE		34951-1210	34951-1220
KEY A, BLACK, W/CPA	33472-1577	A-BLK	GC	PLR	CPA	M	R		2	3		5	6	7	8		10	11	12	SALEABLE		34951-1210	34951-1220
KEY A, BLACK, W/CPA	33472-1578	A-BLK	GC	PLR	CPA	M	R	1			4					9	10	11	12	SALEABLE		34951-1210	34951-1220
KEY A, BLACK, W/CPA	33472-1579	A-BLK	GC	PLR	CPA	M	R				4	5								SALEABLE		34951-1210	34951-1220
KEY A, BLACK, W/CPA	33472-1580	A-BLK	GC	PLR	CPA	M	R	1	2	3	4	5	6	7	8	9	10	11	12	SALEABLE		34951-1210	34951-1220
KEY A, BLACK, W/O CPA	33472-1581	A-BLK	GC	PLR		M	R			3		5				9	10		12	SALEABLE		34951-1210	34951-1220
KEY A, BLACK, WITH CLIPSLOT, W/CPA	33472-1582	A-BLK-CLIP	GC	PLR	CPA	M	R										10			SALEABLE		N/A	N/A
KEY A, BLACK, WITH CLIPSLOT, W/CPA	33472-1583	A-BLK-CLIP	GC	PLR	CPA	M	R			3	4	5	6							SALEABLE		N/A	N/A

molex

MX150 RECEPTACLE 2X6 SEALED ASSEMBLY MAT SEAL
BOM AND PIN OUT SHEET

ASSEMBLY DESCRIPTION	ASSEMBLY PART NUMBER	COMPONENT						BLOCKED TERMINALS												STATUS	COMMENTS	OPTIONAL ATTATCHMENTS SOLD SEPERATELY	
		THE PRESENCE OF AN ABBREVIATION INDICATES THE PRESENCE OF THAT COMPONENT.						CAVITY WITH A NUMBER INDICATES BLOCKED TERMINAL POSITION CAVITY WITHOUT A NUMBER INDICATES OPEN TERMINAL POSITION															
		HOUSING KEY/COLOR	GROMMET CAP	PLR	CPA	MAT SEAL	RING SEAL	1	2	3	4	5	6	7	8	9	10	11	12			BACKSHELL WITH RIBS	BACKSHELL WITHOUT RIBS
KEY A, BLACK, WITH CLIPSLOT, W/O CPA	33472-1584	A-BLK-CLIP	GC	PLR		M	R	1	2			5		7	8	9	10	11	12	SALEABLE		N/A	N/A
KEY A, BLACK, WITH CLIPSLOT, W/O CPA	33472-1585	A-BLK-CLIP	GC	PLR		M	R					5		7	8	9		11		SALEABLE		N/A	N/A
KEY A, BLACK, WITH CLIPSLOT, W/O CPA	33472-1586	A-BLK-CLIP	GC	PLR		M	R	1	2			5					10		12	SALEABLE		N/A	N/A
KEY C, DARK GRAY, WITH CLIPSLOT, W/O CPA	33472-1587	C-DG-CLIP	GC	PLR		M	R	1	2			5	6	7						SALEABLE		N/A	N/A
KEY C, DARK GRAY, WITH CLIPSLOT, W/O CPA	33472-1588	C-DG-CLIP	GC	PLR		M	R	1	2	3	4	5	6	7						SALEABLE		N/A	N/A
KEY A, BLACK, WITH CLIPSLOT, W/O CPA	33472-1589	A-BLK-CLIP	GC	PLR		M	R	1	2	3				7	8	9	10			SALEABLE		N/A	N/A
KEY A, BLACK, WITH CLIPSLOT, W/O CPA	33472-1590	A-BLK-CLIP	GC	PLR		M	R	1	2	3	4	5	6	7	8			11	12	SALEABLE		N/A	N/A
KEY A, BLACK, WITH CLIPSLOT, W/O CPA	33472-1591	A-BLK-CLIP	GC	PLR		M	R				4	5	6	7				11	12	SALEABLE		N/A	N/A
KEY A, BLACK, WITH CLIPSLOT, W/O CPA	33472-1592	A-BLK-CLIP	GC	PLR		M	R					5	6			9	10	11		SALEABLE		N/A	N/A
KEY A, BLACK, WITH CLIPSLOT, W/O CPA	33472-1593	A-BLK-CLIP	GC	PLR		M	R					5	6							SALEABLE		N/A	N/A
KEY B, LIGHT GRAY, W/CPA	33472-1594	B-LG	GC	PLR	CPA	M	R	1					6				10		12	SALEABLE		N/A	N/A
KEY A, BLACK, WITH CLIPSLOT, W/O CPA	33472-1595	A-BLK-CLIP	GC	PLR		M	R							7		9			12	SALEABLE		N/A	N/A
KEY A, BLACK, WITH CLIPSLOT, W/O CPA	33472-1596	A-BLK-CLIP	GC	PLR		M	R					5				9	10	11		SALEABLE		N/A	N/A
KEY A, BLACK, WITH CLIPSLOT, W/O CPA	33472-1597	A-BLK-CLIP	GC	PLR		M	R					5		7		9	10	11	12	SALEABLE		N/A	N/A
KEY A, BLACK, WITH CLIPSLOT, W/O CPA	33472-1598	A-BLK-CLIP	GC	PLR		M	R	1	2	3	4		6	7	8	9			12	SALEABLE		N/A	N/A
KEY A, BLACK, WITH CLIPSLOT, W/O CPA	33472-1599	A-BLK-CLIP	GC	PLR		M	R	1	2	3	4	5	6		8	9	10	11		SALEABLE		N/A	N/A
KEY A, BLACK, WITH CLIPSLOT, W/O CPA	33472-6001	A-BLK-CLIP	GC	PLR		M	R	1	2	3				7	8					SALEABLE		N/A	N/A
KEY A, BLACK, WITH CLIPSLOT, W/O CPA	33472-6002	A-BLK-CLIP	GC	PLR		M	R							7	8	9	10	11	12	SALEABLE		N/A	N/A
KEY A, BLACK, WITH CLIPSLOT, W/O CPA	33472-6003	A-BLK-CLIP	GC	PLR		M	R				4	5				9	10	11	12	SALEABLE		N/A	N/A
KEY A, BLACK, WITH CLIPSLOT, W/O CPA	33472-6004	A-BLK-CLIP	GC	PLR		M	R		2			5			8	9	10	11		SALEABLE		N/A	N/A
KEY A, BLACK, WITH CLIPSLOT, W/O CPA	33472-6005	A-BLK-CLIP	GC	PLR		M	R	1	2	3	4	5	6	7	8	9	10			SALEABLE		N/A	N/A
KEY B, LIGHT GRAY, WITH CLIPSLOT, W/O CPA	33472-6006	B-LG-CLIP	GC	PLR		M	R							7	8	9			12	SALEABLE		N/A	N/A
KEY A, BLACK, WITH CLIPSLOT, W/O CPA	33472-6007	A-BLK-CLIP	GC	PLR		M	R							7				11	12	SALEABLE		N/A	N/A
KEY A, BLACK, WITH CLIPSLOT, W/O CPA	33472-6008	A-BLK-CLIP	GC	PLR		M	R	1		3	4	5	6	7	8	9	10	11		SALEABLE		N/A	N/A
KEY A, BLACK, WITH CLIPSLOT, W/O CPA	33472-6009	A-BLK-CLIP	GC	PLR		M	R	1		3		5	6	7	8	9	10			SALEABLE		N/A	N/A
KEY A, BLACK, WITH CLIPSLOT, W/O CPA	33472-6010	A-BLK-CLIP	GC	PLR		M	R	1	2	3	4							11	12	SALEABLE		N/A	N/A
KEY B, LIGHT GRAY, WITH CLIPSLOT, W/O CPA	33472-6011	B-LG-CLIP	GC	PLR		M	R	1										11		SALEABLE		N/A	N/A
KEY B, LIGHT GRAY, WITH CLIPSLOT, W/O CPA	33472-6012	B-LG-CLIP	GC	PLR		M	R											11		SALEABLE		N/A	N/A
KEY A, BLACK, W/CPA	33472-6013	A-BLK	GC	PLR	CPA	M	R						6		8	9	10	11	12	SALEABLE		34951-1210	34951-1220
KEY B, LIGHT GRAY, W/CPA	33472-6014	B-LG	GC	PLR	CPA	M	R						6		8	9	10	11	12	SALEABLE		34951-1210	34951-1220
KEY A, BLACK, WITH CLIPSLOT, W/O CPA	33472-6015	A-BLK-CLIP	GC	PLR		M	R	1	2	3	4				8	9	10	11	12	SALEABLE		N/A	N/A
KEY A, BLACK, WITH CLIPSLOT, W/CPA	33472-6016	A-BLK-CLIP	GC	PLR	CPA	M	R		2	3				7		9	10	11	12	SALEABLE		N/A	N/A
KEY A, BLACK, WITH CLIPSLOT, W/CPA	33472-6017	A-BLK-CLIP	GC	PLR	CPA	M	R		2	3										SALEABLE		N/A	N/A
KEY A, BLACK, WITH CLIPSLOT, W/CPA	33472-6018	A-BLK-CLIP	GC	PLR	CPA	M	R		2					7		9	10	11	12	SALEABLE		N/A	N/A
KEY A, BLACK, WITH CLIPSLOT, W/CPA	33472-6019	A-BLK-CLIP	GC	PLR	CPA	M	R		2											SALEABLE		N/A	N/A
KEY A, BLACK, W/CPA	33472-6020	A-BLK	GC	PLR	CPA	M	R				4	5	6	7	8	9	10	11		SALEABLE		34951-1210	34951-1220
KEY A, BLACK, W/O CPA	33472-6021	A-BLK	GC	PLR		M	R							7	8	9	10	11		SALEABLE		34951-1210	34951-1220
KEY A, BLACK, W/O CPA	33472-6022	A-BLK	GC	PLR		M	R							7	8					SALEABLE		34951-1210	34951-1220
KEY A, BLACK, W/O CPA	33472-6023	A-BLK	GC	PLR		M	R		2							9	10			SALEABLE		34951-1210	34951-1220
KEY A, BLACK, W/O CPA	33472-6024	A-BLK	GC	PLR		M	R		2		4									SALEABLE		34951-1210	34951-1220
KEY A, BLACK, W/O CPA	33472-6025	A-BLK	GC	PLR		M	R		2	3					8			11		SALEABLE		34951-1210	34951-1220
KEY A, BLACK, W/O CPA	33472-6026	A-BLK	GC	PLR		M	R		2	3		5	6	7	8			11		SALEABLE		34951-1210	34951-1220
KEY A, BLACK, W/O CPA	33472-6027	A-BLK	GC	PLR		M	R	1				5	6	7	8					SALEABLE		34951-1210	34951-1220
KEY A, BLACK, W/O CPA	33472-6028	A-BLK	GC	PLR		M	R		2	3			6	7	8		10	11		SALEABLE		34951-1210	34951-1220
KEY A, BLACK, W/O CPA	33472-6029	A-BLK	GC	PLR		M	R											11		SALEABLE		34951-1210	34951-1220
KEY A, BLACK, W/O CPA	33472-6030	A-BLK	GC	PLR		M	R		2	3	4			7	8					SALEABLE		34951-1210	34951-1220
KEY A, BLACK, W/O CPA	33472-6031	A-BLK	GC	PLR		M	R	1		3	4	5	6	7	8					SALEABLE		34951-1210	34951-1220
KEY A, BLACK, W/O CPA	33472-6032	A-BLK	GC	PLR		M	R				4	5	6	7	8	9				SALEABLE		34951-1210	34951-1220
KEY A, BLACK, W/O CPA	33472-6033	A-BLK	GC	PLR		M	R						6	7	8					SALEABLE		34951-1210	34951-1220
KEY A, BLACK, W/O CPA	33472-6034	A-BLK	GC	PLR		M	R		2		4	5			8		10	11		SALEABLE		34951-1210	34951-1220
KEY A, BLACK, W/O CPA	33472-6035	A-BLK	GC	PLR		M	R			3	4					9	10			SALEABLE		34951-1210	34951-1220
KEY A, BLACK, W/O CPA	33472-6036	A-BLK	GC	PLR		M	R							7						SALEABLE		34951-1210	34951-1220
KEY A, BLACK, W/O CPA	33472-6037	A-BLK	GC	PLR		M	R		2	3	4	5					10	11	12	SALEABLE		34951-1210	34951-1220
KEY A, BLACK, W/O CPA	33472-6038	A-BLK	GC	PLR		M	R	1					6	7		9				SALEABLE		34951-1210	34951-1220
KEY A, BLACK, W/O CPA	33472-6039	A-BLK	GC	PLR		M	R		2	3	4	5	6	7	8		10	11	12	SALEABLE		34951-1210	34951-1220
KEY A, BLACK, W/O CPA	33472-6040	A-BLK	GC	PLR		M	R		2	3								11		SALEABLE		34951-1210	34951-1220
KEY A, BLACK, W/O CPA	33472-6041	A-BLK	GC	PLR		M	R	1	2	3	4	5				9	10	11	12	SALEABLE		34951-1210	34951-1220
KEY A, BLACK, W/O CPA	33472-6042	A-BLK	GC	PLR		M	R		2	3						9	10	11		SALEABLE		34951-1210	34951-1220
KEY A, BLACK, W/O CPA	33472-6043	A-BLK	GC	PLR		M	R	1	2	3	4	5			8	9	10	11	12	SALEABLE		34951-1210	34951-1220
KEY A, BLACK, W/O CPA	33472-6044	A-BLK	GC	PLR		M	R	1	2	3	4	5							12	SALEABLE		34951-1210	34951-1220
KEY A, BLACK, W/O CPA	33472-6045	A-BLK	GC	PLR		M	R			3	4	5								SALEABLE		34951-1210	34951-1220
KEY A, BLACK, W/O CPA	33472-6046	A-BLK	GC	PLR		M	R			3	4	5	6	7	8	9	10	11		SALEABLE		34951-1210	34951-1220
KEY A, BLACK, W/O CPA	33472-6047	A-BLK	GC	PLR		M	R		2	3					8	9	10	11	12	SALEABLE		34951-1210	34951-1220
KEY A, BLACK, W/O CPA	33472-6048	A-BLK	GC	PLR		M	R		2	3					8	9				SALEABLE		34951-1210	34951-1220
KEY A, BLACK, W/O CPA	33472-6049	A-BLK	GC	PLR		M	R	1	2	3								11	12	SALEABLE		34951-1210	34951-1220
KEY A, BLACK, W/O CPA	33472-6050	A-BLK	GC	PLR		M	R	1	2	3	4		6		8		10	11	12	SALEABLE		34951-1210	34951-1220
KEY A, BLACK, W/O CPA	33472-6051	A-BLK	GC	PLR		M	R		2		4		6		8		10	11	12	SALEABLE		34951-1210	34951-1220
KEY A, BLACK, W/O CPA	33472-6052	A-BLK	GC	PLR		M	R											11	12	SALEABLE		34951-1210	34951-1220
KEY A, BLACK, W/O CPA	33472-6053	A-BLK	GC	PLR		M	R	1	2	3	4	5	6			9				SALEABLE		34951-1210	34951-1220
KEY A, BLACK, W/O CPA	33472-6054	A-BLK	GC	PLR		M	R						6			9				SALEABLE		34951-1210	34951-1220
KEY A, BLACK, W/O CPA	33472-6055	A-BLK	GC	PLR		M	R		2					7	8	9				SALEABLE		34951-1210	34951-1220
KEY A, BLACK, W/O CPA	33472-6056	A-BLK	GC	PLR		M	R			3	4	5	6	7						SALEABLE		34951-1210	34951-1220
KEY A, BLACK, W/O CPA	33472-6057	A-BLK	GC	PLR		M	R	1	2	3	4	5	6	7					12	SALEABLE		34951-1210	34951-1220
KEY A, BLACK, W/O CPA	33472-6058	A-BLK	GC	PLR		M	R	1	2	3	4	5		7	8	9	10	11		SALEABLE		34951-1210	34951-1220
KEY A, BLACK, W/O CPA	33472-6059	A-BLK	GC	PLR		M	R		2		4		6		8		10	11		SALEABLE		34951-1210	34951-1220
KEY A, BLACK, W/O CPA	33472-6060	A-BLK	GC	PLR		M	R								8					SALEABLE		34951-1210	34951-1220
KEY A, BLACK, W/O CPA	33472-6061	A-BLK	GC	PLR		M	R	1		3	4	5	6	7	8		10	11	12	SALEABLE		34951-1210	34951-1220
KEY A, BLACK, W/O CPA	33472-6062	A-BLK	GC	PLR		M	R	1	2			5	6	7	8			11	12	SALEABLE		34951-1210	34951-1220
KEY A, BLACK, W/O CPA	33472-6063	A-BLK	GC	PLR		M	R									9				SALEABLE		34951-1210	34951-1220
KEY A, BLACK, W/O CPA	33472-6064	A-BLK	GC	PLR		M	R			3	4					9	10	11	12	SALEABLE		34951-1210	34951-1220
KEY A, BLACK, W/O CPA	33472-6065	A-BLK	GC	PLR		M	R	1	2	3	4	5	6	7	8	9			12	SALEABLE		34951-1210	34951-1220

molex

MX150 RECEPTACLE 2X6 SEALED ASSEMBLY MAT SEAL
BOM AND PIN OUT SHEET

ASSEMBLY DESCRIPTION	ASSEMBLY PART NUMBER	COMPONENT						BLOCKED TERMINALS												STATUS	COMMENTS	OPTIONAL ATTATCHMENTS SOLD SEPERATELY	
		THE PRESENCE OF AN ABBREVIATION INDICATES THE PRESENCE OF THAT COMPONENT.						CAVITY WITH A NUMBER INDICATES BLOCKED TERMINAL POSITION CAVITY WITHOUT A NUMBER INDICATES OPEN TERMINAL POSITION															
		HOUSING KEY/COLOR	GROMMET CAP	PLR	CPA	MAT SEAL	RING SEAL	1	2	3	4	5	6	7	8	9	10	11	12			BACKSHELL WITH RIBS	BACKSHELL WITHOUT RIBS
KEY A, BLACK, W/O CPA	33472-6066	A-BLK	GC	PLR		M	R	1	2			5	6	7	8					SALEABLE		34951-1210	34951-1220
KEY A, BLACK, W/O CPA	33472-6067	A-BLK	GC	PLR		M	R				4				8		10			SALEABLE		34951-1210	34951-1220
KEY A, BLACK, W/O CPA	33472-6068	A-BLK	GC	PLR		M	R	1	2	3	4	5	6			9	10	11	12	SALEABLE		34951-1210	34951-1220
KEY A, BLACK, W/O CPA	33472-6069	A-BLK	GC	PLR		M	R	1			4							11		SALEABLE		34951-1210	34951-1220
KEY A, BLACK, W/O CPA	33472-6070	A-BLK	GC	PLR		M	R									9	10	11	12	SALEABLE		34951-1210	34951-1220
KEY A, BLACK, W/O CPA	33472-6071	A-BLK	GC	PLR		M	R	1	2	3	4	5	6	7	8				12	SALEABLE		34951-1210	34951-1220
KEY A, BLACK, W/O CPA	33472-6072	A-BLK	GC	PLR		M	R	1	2				6	7	8				12	SALEABLE		34951-1210	34951-1220
KEY A, BLACK, W/O CPA	33472-6073	A-BLK	GC	PLR		M	R	1	2					7	8					SALEABLE		34951-1210	34951-1220
KEY A, BLACK, W/O CPA	33472-6074	A-BLK	GC	PLR		M	R	1					6	7	8				12	SALEABLE		34951-1210	34951-1220
KEY A, BLACK, W/O CPA	33472-6075	A-BLK	GC	PLR		M	R							7	8				12	SALEABLE		34951-1210	34951-1220
KEY A, BLACK, W/O CPA	33472-6076	A-BLK	GC	PLR		M	R		2		4			7	8	9	10			SALEABLE		34951-1210	34951-1220
KEY A, BLACK, W/O CPA	33472-6077	A-BLK	GC	PLR		M	R			3		5	6	7	8	9	10	11	12	SALEABLE		34951-1210	34951-1220
KEY A, BLACK, W/O CPA	33472-6078	A-BLK	GC	PLR		M	R			3				7		9	10	11	12	SALEABLE		34951-1210	34951-1220
KEY A, BLACK, W/O CPA	33472-6079	A-BLK	GC	PLR		M	R	1	2	3	4		6	7	8	9	10		12	SALEABLE		34951-1210	34951-1220
KEY A, BLACK, W/O CPA	33472-6080	A-BLK	GC	PLR		M	R	1	2	3	4			7	8	9	10			SALEABLE		34951-1210	34951-1220
KEY A, BLACK, W/O CPA	33472-6081	A-BLK	GC	PLR		M	R						6		8	9	10	11	12	SALEABLE		34951-1210	34951-1220
KEY A, BLACK, W/O CPA	33472-6082	A-BLK	GC	PLR		M	R								8	9	10	11	12	SALEABLE		34951-1210	34951-1220
KEY A, BLACK, W/O CPA	33472-6083	A-BLK	GC	PLR		M	R								8	9		11		SALEABLE		34951-1210	34951-1220
KEY A, BLACK, W/O CPA	33472-6084	A-BLK	GC	PLR		M	R	1	2	3					8		10	11	12	SALEABLE		34951-1210	34951-1220
KEY A, BLACK, W/O CPA	33472-6085	A-BLK	GC	PLR		M	R			3		5	6		8	9	10	11	12	SALEABLE		34951-1210	34951-1220
KEY A, BLACK, W/O CPA	33472-6086	A-BLK	GC	PLR		M	R		2	3			6	7	8	9	10	11	12	SALEABLE		34951-1210	34951-1220
KEY A, BLACK, W/O CPA	33472-6087	A-BLK	GC	PLR		M	R			3	4	5	6		8	9	10	11		SALEABLE		34951-1210	34951-1220
KEY A, BLACK, W/O CPA	33472-6088	A-BLK	GC	PLR		M	R								8	9				SALEABLE		34951-1210	34951-1220
KEY A, BLACK, W/O CPA	33472-6089	A-BLK	GC	PLR		M	R			3	4	5	6	7	8	9	10	11	12	SALEABLE		34951-1210	34951-1220
KEY A, BLACK, W/O CPA	33472-6090	A-BLK	GC	PLR		M	R	1	2											SALEABLE		34951-1210	34951-1220
KEY A, BLACK, W/O CPA	33472-6091	A-BLK	GC	PLR		M	R	1	2	3	4	5	6	7	8					SALEABLE		34951-1210	34951-1220
KEY A, BLACK, W/O CPA	33472-6092	A-BLK	GC	PLR		M	R	1	2	3	4	5	6	7	8	9				SALEABLE		34951-1210	34951-1220
KEY A, BLACK, W/O CPA	33472-6093	A-BLK	GC	PLR		M	R	1	2	3			6	7	8		10	11	12	SALEABLE		34951-1210	34951-1220
KEY A, BLACK, W/O CPA	33472-6094	A-BLK	GC	PLR		M	R				4						10			SALEABLE		34951-1210	34951-1220
KEY A, BLACK, W/O CPA	33472-6095	A-BLK	GC	PLR		M	R	1							8		10	11		SALEABLE		34951-1210	34951-1220
KEY A, BLACK, W/O CPA	33472-6096	A-BLK	GC	PLR		M	R			3	4	5	6			9	10	11		SALEABLE		34951-1210	34951-1220
KEY A, BLACK, W/O CPA	33472-6097	A-BLK	GC	PLR		M	R								8	9	10		12	SALEABLE		34951-1210	34951-1220
KEY A, BLACK, W/O CPA	33472-6098	A-BLK	GC	PLR		M	R	1	2		4			7	8		10		12	SALEABLE		34951-1210	34951-1220
KEY A, BLACK, W/O CPA	33472-6099	A-BLK	GC	PLR		M	R		2	3		5						11		SALEABLE		34951-1210	34951-1220
KEY A, BLACK, W/O CPA	33472-6100	A-BLK	GC	PLR		M	R	1	2	3						9		11		SALEABLE		34951-1210	34951-1220
KEY A, BLACK, W/O CPA	33472-6101	A-BLK	GC	PLR		M	R	1	2	3		5				9		11		SALEABLE		34951-1210	34951-1220
KEY A, BLACK, W/O CPA	33472-6102	A-BLK	GC	PLR		M	R	1	2	3	4	5		7	8					SALEABLE		34951-1210	34951-1220
KEY A, BLACK, W/O CPA	33472-6103	A-BLK	GC	PLR		M	R					5			8					SALEABLE		34951-1210	34951-1220
KEY A, BLACK, W/O CPA	33472-6104	A-BLK	GC	PLR		M	R		2			5				9				SALEABLE		34951-1210	34951-1220
KEY A, BLACK, W/O CPA	33472-6105	A-BLK	GC	PLR		M	R		2			5		7		9			12	SALEABLE		34951-1210	34951-1220
KEY A, BLACK, W/O CPA	33472-6106	A-BLK	GC	PLR		M	R		2							9				SALEABLE		34951-1210	34951-1220
KEY A, BLACK, W/O CPA	33472-6107	A-BLK	GC	PLR		M	R	1	2	3	4		6					11	12	SALEABLE		34951-1210	34951-1220
KEY A, BLACK, W/O CPA	33472-6108	A-BLK	GC	PLR		M	R		2						8					SALEABLE		34951-1210	34951-1220
KEY A, BLACK, W/O CPA	33472-6109	A-BLK	GC	PLR		M	R		2		4				8		10			SALEABLE		34951-1210	34951-1220
KEY A, BLACK, W/O CPA	33472-6110	A-BLK	GC	PLR		M	R	1	2	3	4	5	6		8		10	11	12	SALEABLE		34951-1210	34951-1220
KEY A, BLACK, W/O CPA	33472-6111	A-BLK	GC	PLR		M	R	1		3		5	6		8	9	10	11	12	SALEABLE		34951-1210	34951-1220
KEY A, BLACK, W/O CPA	33472-6112	A-BLK	GC	PLR		M	R				4	5	6	7	8	9	10	11	12	SALEABLE		34951-1210	34951-1220
KEY A, BLACK, W/O CPA	33472-6113	A-BLK	GC	PLR		M	R				4			7	8	9	10	11	12	SALEABLE		34951-1210	34951-1220
KEY A, BLACK, W/O CPA	33472-6114	A-BLK	GC	PLR		M	R	1	2	3	4	5	6		8	9	10	11	12	SALEABLE		34951-1210	34951-1220
KEY A, BLACK, W/O CPA	33472-6115	A-BLK	GC	PLR		M	R	1	2	3	4	5	6	7	8	9	10			SALEABLE		34951-1210	34951-1220
KEY A, BLACK, W/O CPA	33472-6116	A-BLK	GC	PLR		M	R					5	6	7			10		12	SALEABLE		34951-1210	34951-1220
KEY A, BLACK, W/O CPA	33472-6117	A-BLK	GC	PLR		M	R	1	2		4	5	6	7					12	SALEABLE		34951-1210	34951-1220
KEY A, BLACK, W/O CPA	33472-6118	A-BLK	GC	PLR		M	R							7	8			11		SALEABLE		34951-1210	34951-1220
KEY A, BLACK, W/O CPA	33472-6119	A-BLK	GC	PLR		M	R	1	2	3	4			7	8	9	10	11		SALEABLE		34951-1210	34951-1220
KEY A, BLACK, W/O CPA	33472-6120	A-BLK	GC	PLR		M	R					5	6	7		9	10		12	SALEABLE		34951-1210	34951-1220
KEY A, BLACK, W/O CPA	33472-6121	A-BLK	GC	PLR		M	R	1	2		4	5	6	7		9	10	11	12	SALEABLE		34951-1210	34951-1220
KEY A, BLACK, W/O CPA	33472-6122	A-BLK	GC	PLR		M	R					5			8	9				SALEABLE		34951-1210	34951-1220
KEY A, BLACK, W/O CPA	33472-6123	A-BLK	GC	PLR		M	R					5		7	8	9				SALEABLE		34951-1210	34951-1220
KEY A, BLACK, W/O CPA	33472-6124	A-BLK	GC	PLR		M	R				4	5				9	10	11	12	SALEABLE		34951-1210	34951-1220
KEY A, BLACK, W/O CPA	33472-6125	A-BLK	GC	PLR		M	R			3			6	7	8	9	10	11	12	SALEABLE		34951-1210	34951-1220
KEY A, BLACK, W/O CPA	33472-6126	A-BLK	GC	PLR		M	R			3				7	8	9				SALEABLE		34951-1210	34951-1220
KEY A, BLACK, W/O CPA	33472-6127	A-BLK	GC	PLR		M	R			3			6			9	10	11	12	SALEABLE		34951-1210	34951-1220
KEY A, BLACK, W/O CPA	33472-6128	A-BLK	GC	PLR		M	R						6	7	8		10	11	12	SALEABLE		34951-1210	34951-1220
KEY A, BLACK, W/O CPA	33472-6129	A-BLK	GC	PLR		M	R						6				10	11	12	SALEABLE		34951-1210	34951-1220
KEY A, BLACK, W/O CPA	33472-6130	A-BLK	GC	PLR		M	R			3						9				SALEABLE		34951-1210	34951-1220
KEY A, BLACK, W/O CPA	33472-6131	A-BLK	GC	PLR		M	R					5	6	7			10	11		SALEABLE		34951-1210	34951-1220
KEY A, BLACK, W/O CPA	33472-6132	A-BLK	GC	PLR		M	R		2				6				10	11		SALEABLE		34951-1210	34951-1220
KEY A, BLACK, W/O CPA	33472-6133	A-BLK	GC	PLR		M	R		2				6		8			11		SALEABLE		34951-1210	34951-1220
KEY A, BLACK, W/O CPA	33472-6134	A-BLK	GC	PLR		M	R		2											SALEABLE		34951-1210	34951-1220
KEY A, BLACK, W/O CPA	33472-6135	A-BLK	GC	PLR		M	R	1		3	4	5	6		8		10	11	12	SALEABLE		34951-1210	34951-1220
KEY A, BLACK, W/O CPA	33472-6136	A-BLK	GC	PLR		M	R	1		3		5						11	12	SALEABLE		34951-1210	34951-1220
KEY A, BLACK, W/O CPA	33472-6137	A-BLK	GC	PLR		M	R				4	5	6		8		10	11		SALEABLE		34951-1210	34951-1220
KEY A, BLACK, W/O CPA	33472-6138	A-BLK	GC	PLR		M	R	1		3		5			8		10	11	12	SALEABLE		34951-1210	34951-1220
KEY A, BLACK, W/O CPA	33472-6139	A-BLK	GC	PLR		M	R				4	5	6		8		10			SALEABLE		34951-1210	34951-1220
KEY A, BLACK, W/O CPA	33472-6140	A-BLK	GC	PLR		M	R				4	5			8		10			SALEABLE		34951-1210	34951-1220
KEY A, BLACK, W/O CPA	33472-6141	A-BLK	GC	PLR		M	R	1	2	3	4		6				10	11	12	SALEABLE		34951-1210	34951-1220
KEY A, BLACK, W/O CPA	33472-6142	A-BLK	GC	PLR		M	R	1					6	7	8	9				SALEABLE		34951-1210	34951-1220
KEY A, BLACK, W/O CPA	33472-6143	A-BLK	GC	PLR		M	R				4		6		8					SALEABLE		34951-1210	34951-1220
KEY A, BLACK, W/O CPA	33472-6144	A-BLK	GC	PLR		M	R		2		4				8	9	10			SALEABLE		34951-1210	34951-1220
KEY A, BLACK, W/O CPA	33472-6145	A-BLK	GC	PLR		M	R									9	10			SALEABLE		34951-1210	34951-1220
KEY A, BLACK, W/O CPA	33472-6146	A-BLK	GC	PLR		M	R		2	3	4				8	9		11		SALEABLE		34951-1210	34951-1220

molex

MX150 RECEPTACLE 2X6 SEALED ASSEMBLY MAT SEAL
BOM AND PIN OUT SHEET

ASSEMBLY DESCRIPTION	ASSEMBLY PART NUMBER	COMPONENT						BLOCKED TERMINALS												STATUS	COMMENTS	OPTIONAL ATTATCHMENTS SOLD SEPERATELY	
		THE PRESENCE OF AN ABBREVIATION INDICATES THE PRESENCE OF THAT COMPONENT.						CAVITY WITH A NUMBER INDICATES BLOCKED TERMINAL POSITION CAVITY WITHOUT A NUMBER INDICATES OPEN TERMINAL POSITION															
		HOUSING KEY/COLOR	GROMMET CAP	PLR	CPA	MAT SEAL	RING SEAL	1	2	3	4	5	6	7	8	9	10	11	12			BACKSHELL WITH RIBS	BACKSHELL WITHOUT RIBS
KEY A, BLACK, W/O CPA	33472-6147	A-BLK	GC	PLR		M	R					5					10	11		SALEABLE		34951-1210	34951-1220
KEY A, BLACK, W/O CPA	33472-6148	A-BLK	GC	PLR		M	R				4	5		7				11	12	SALEABLE		34951-1210	34951-1220
KEY A, BLACK, W/O CPA	33472-6149	A-BLK	GC	PLR		M	R	1	2	3	4		6	7	8	9	10	11		SALEABLE		34951-1210	34951-1220
KEY A, BLACK, W/O CPA	33472-6150	A-BLK	GC	PLR		M	R				4		6		8		10	11		SALEABLE		34951-1210	34951-1220
KEY A, BLACK, W/O CPA	33472-6151	A-BLK	GC	PLR		M	R	1	2	3	4	5	6		8	9				SALEABLE		34951-1210	34951-1220
KEY A, BLACK, W/O CPA	33472-6152	A-BLK	GC	PLR		M	R		2		4		6		8					SALEABLE		34951-1210	34951-1220
KEY A, BLACK, W/O CPA	33472-6153	A-BLK	GC	PLR		M	R	1		3	4							11	12	SALEABLE		34951-1210	34951-1220
KEY A, BLACK, W/O CPA	33472-6154	A-BLK	GC	PLR		M	R	1		3	4							11		SALEABLE		34951-1210	34951-1220
KEY A, BLACK, W/O CPA	33472-6155	A-BLK	GC	PLR		M	R							7	8	9	10			SALEABLE		34951-1210	34951-1220
KEY A, BLACK, W/O CPA	33472-6156	A-BLK	GC	PLR		M	R							7	8	9	10		12	SALEABLE		34951-1210	34951-1220
KEY A, BLACK, W/O CPA	33472-6157	A-BLK	GC	PLR		M	R		2					7	8					SALEABLE		34951-1210	34951-1220
KEY A, BLACK, W/O CPA	33472-6158	A-BLK	GC	PLR		M	R			3	4							11	12	SALEABLE		34951-1210	34951-1220
KEY A, BLACK, W/O CPA	33472-6159	A-BLK	GC	PLR		M	R	1			4			7				11		SALEABLE		34951-1210	34951-1220
KEY A, BLACK, W/O CPA	33472-6160	A-BLK	GC	PLR		M	R							7		9	10			SALEABLE		34951-1210	34951-1220
KEY A, BLACK, W/O CPA	33472-6161	A-BLK	GC	PLR		M	R	1					6	7	8	9	10			SALEABLE		34951-1210	34951-1220
KEY A, BLACK, W/O CPA	33472-6162	A-BLK	GC	PLR		M	R	1			4		6	7	8	9	10	11		SALEABLE		34951-1210	34951-1220
KEY A, BLACK, W/O CPA	33472-6163	A-BLK	GC	PLR		M	R	1	2	3		5	6	7	8	9	10		12	SALEABLE		34951-1210	34951-1220
KEY A, BLACK, W/O CPA	33472-6164	A-BLK	GC	PLR		M	R	1	2			5	6	7	8	9	10			SALEABLE		34951-1210	34951-1220
KEY A, BLACK, W/O CPA	33472-6165	A-BLK	GC	PLR		M	R		2	3					8	9	10	11		SALEABLE		34951-1210	34951-1220
KEY A, BLACK, W/O CPA	33472-6166	A-BLK	GC	PLR		M	R	1			4	5			8		10		12	SALEABLE		34951-1210	34951-1220
KEY A, BLACK, W/O CPA	33472-6167	A-BLK	GC	PLR		M	R	1	2	3	4					9	10	11	12	SALEABLE		34951-1210	34951-1220
KEY A, BLACK, W/O CPA	33472-6168	A-BLK	GC	PLR		M	R		2								10	11	12	SALEABLE		34951-1210	34951-1220
KEY A, BLACK, W/O CPA	33472-6169	A-BLK	GC	PLR		M	R										10			SALEABLE		34951-1210	34951-1220
KEY A, BLACK, W/O CPA	33472-6170	A-BLK	GC	PLR		M	R							7	8	9			12	SALEABLE		34951-1210	34951-1220
KEY A, BLACK, W/O CPA	33472-6171	A-BLK	GC	PLR		M	R				4	5		7	8	9	10	11	12	SALEABLE		34951-1210	34951-1220
KEY A, BLACK, W/O CPA	33472-6172	A-BLK	GC	PLR		M	R				4	5		7	8		10	11	12	SALEABLE		34951-1210	34951-1220
KEY A, BLACK, W/O CPA	33472-6173	A-BLK	GC	PLR		M	R		2			5			8	9	10	11		SALEABLE		34951-1210	34951-1220
KEY A, BLACK, W/O CPA	33472-6174	A-BLK	GC	PLR		M	R					5								SALEABLE		34951-1210	34951-1220
KEY A, BLACK, W/O CPA	33472-6175	A-BLK	GC	PLR		M	R	1	2			5		7	8	9	10	11	12	SALEABLE		34951-1210	34951-1220
KEY A, BLACK, W/O CPA	33472-6176	A-BLK	GC	PLR		M	R					5		7	8	9		11		SALEABLE		34951-1210	34951-1220
KEY A, BLACK, W/O CPA	33472-6177	A-BLK	GC	PLR		M	R	1	2			5					10		12	SALEABLE		34951-1210	34951-1220
KEY A, BLACK, W/O CPA	33472-6178	A-BLK	GC	PLR		M	R					5	6			9	10	11		SALEABLE		34951-1210	34951-1220
KEY A, BLACK, W/O CPA	33472-6179	A-BLK	GC	PLR		M	R					5	6							SALEABLE		34951-1210	34951-1220
KEY A, BLACK, W/O CPA	33472-6180	A-BLK	GC	PLR		M	R							7		9			12	SALEABLE		34951-1210	34951-1220
KEY A, BLACK, W/O CPA	33472-6181	A-BLK	GC	PLR		M	R					5				9	10	11		SALEABLE		34951-1210	34951-1220
KEY A, BLACK, W/O CPA	33472-6182	A-BLK	GC	PLR		M	R					5		7		9	10	11	12	SALEABLE		34951-1210	34951-1220
KEY A, BLACK, W/O CPA	33472-6183	A-BLK	GC	PLR		M	R	1	2	3	4		6	7	8	9			12	SALEABLE		34951-1210	34951-1220
KEY A, BLACK, W/O CPA	33472-6184	A-BLK	GC	PLR		M	R	1	2	3	4	5	6		8	9	10	11		SALEABLE		34951-1210	34951-1220
KEY A, BLACK, W/O CPA	33472-6185	A-BLK	GC	PLR		M	R							7				11	12	SALEABLE		34951-1210	34951-1220
KEY A, BLACK, W/O CPA	33472-6186	A-BLK	GC	PLR		M	R	1		3	4	5	6	7	8	9	10	11		SALEABLE		34951-1210	34951-1220
KEY A, BLACK, W/O CPA	33472-6187	A-BLK	GC	PLR		M	R	1		3		5	6	7	8	9	10			SALEABLE		34951-1210	34951-1220
KEY A, BLACK, W/O CPA	33472-6188	A-BLK	GC	PLR		M	R	1	2	3	4							11	12	SALEABLE		34951-1210	34951-1220
KEY A, BLACK, WITH CLIPSLOT, W/O CPA	33472-6189	A-BLK-CLIP	GC	PLR		M	R		2					7	8	9	10	11	12	SALEABLE		N/A	N/A
KEY A, BLACK, WITH CLIPSLOT, W/O CPA	33472-6190	A-BLK-CLIP	GC	PLR		M	R	1	2					7	8	9	10	11	12	SALEABLE		N/A	N/A
KEY A, BLACK, WITH CLIPSLOT, W/O CPA	33472-6191	A-BLK-CLIP	GC	PLR		M	R		2				6	7	8	9	10	11	12	SALEABLE		N/A	N/A
KEY A, BLACK, WITH CLIPSLOT, W/O CPA	33472-6192	A-BLK-CLIP	GC	PLR		M	R		2				6	7	8					SALEABLE		N/A	N/A
KEY A, BLACK, WITH CLIPSLOT, W/O CPA	33472-6193	A-BLK-CLIP	GC	PLR		M	R		2	3	4		6	7	8					SALEABLE		N/A	N/A
KEY A, BLACK, WITH CLIPSLOT, W/O CPA	33472-6194	A-BLK-CLIP	GC	PLR		M	R							7	8	9				SALEABLE		N/A	N/A
KEY A, BLACK, WITH CLIPSLOT, W/O CPA	33472-6195	A-BLK-CLIP	GC	PLR		M	R			3						9	10	11		SALEABLE		N/A	N/A
KEY A, BLACK, WITH CLIPSLOT, W/O CPA	33472-6196	A-BLK-CLIP	GC	PLR		M	R	1	2		4	5	6	7	8	9			12	SALEABLE		N/A	N/A
KEY A, BLACK, WITH CLIPSLOT, W/O CPA	33472-6197	A-BLK-CLIP	GC	PLR		M	R	1	2	3	4	5	6	7	8			11		SALEABLE		N/A	N/A
KEY A, BLACK, WITH CLIPSLOT, W/O CPA	33472-6198	A-BLK-CLIP	GC	PLR		M	R		2			5		7			10			SALEABLE		N/A	N/A
KEY A, BLACK, WITH CLIPSLOT, W/O CPA	33472-6199	A-BLK-CLIP	GC	PLR		M	R	1	2	3	4	5	6	7		9	10		12	SALEABLE		N/A	N/A
KEY B, LIGHT GRAY, WITH CLIPSLOT, W/O CPA	33472-6200	B-LG-CLIP	GC	PLR		M	R			3	4	5			8	9	10	11	12	SALEABLE		N/A	N/A
KEY A, BLACK, W/CPA	33472-6201	A-BLK	GC	PLR	CPA	M	R	1	2			5	6	7	8			11	12	SALEABLE		34951-1210	34951-1220
KEY B, LIGHT GRAY, W/CPA	33472-6202	B-LG	GC	PLR	CPA	M	R	1	2			5	6	7	8			11	12	SALEABLE		34951-1210	34951-1220
KEY A, BLACK, WITH CLIPSLOT, W/O CPA	33472-6203	A-BLK-CLIP	GC	PLR		M	R				4			7						SALEABLE		N/A	N/A
KEY A, BLACK, WITH CLIPSLOT, W/O CPA	33472-6204	A-BLK-CLIP	GC	PLR		M	R				4		6	7						SALEABLE		N/A	N/A
KEY A, BLACK, WITH CLIPSLOT, W/O CPA	33472-6205	A-BLK-CLIP	GC	PLR		M	R		2	3	4	5	6		8	9	10	11	12	SALEABLE		N/A	N/A
KEY A, BLACK, WITH CLIPSLOT, W/CPA	33472-6206	A-BLK-CLIP	GC	PLR	CPA	M	R					5	6					11	12	SALEABLE		N/A	N/A
KEY A, BLACK, WITH CLIPSLOT, W/CPA	33472-6207	A-BLK-CLIP	GC	PLR	CPA	M	R			3					8	9	10	11		SALEABLE		N/A	N/A
KEY A, BLACK, WITH CLIPSLOT, W/CPA	33472-6208	A-BLK-CLIP	GC	PLR	CPA	M	R								8	9	10	11		SALEABLE		N/A	N/A
KEY B, LIGHT GRAY, WITH CLIPSLOT, W/O CPA	33472-6209	B-LG-CLIP	GC	PLR		M	R	1					6	7			10	11	12	SALEABLE		N/A	N/A
KEY A, BLACK, W/CPA	33472-6210	A-BLK	GC	PLR	CPA	M	R								8	9			12	SALEABLE		34951-1210	34951-1220
KEY A, BLACK, WITH CLIPSLOT, W/O CPA	33472-6211	A-BLK-CLIP	GC	PLR		M	R	1												SALEABLE		N/A	N/A
KEY A, BLACK, W/CPA	33472-6212	A-BLK	GC	PLR	CPA	M	R						6		8		10		12	SALEABLE		34951-1210	34951-1220
KEY A, BLACK, W/CPA	33472-6213	A-BLK	GC	PLR	CPA	M	R								8		10		12	SALEABLE		34951-1210	34951-1220
KEY A, BLACK, WITH CLIPSLOT, W/O CPA	33472-6214	A-BLK-CLIP	GC	PLR		M	R							7			10	11	12	SALEABLE		N/A	N/A
KEY A, BLACK, WITH CLIPSLOT, W/O CPA	33472-6215	A-BLK-CLIP	GC	PLR		M	R							7					12	SALEABLE		N/A	N/A
KEY A, BLACK, WITH CLIPSLOT, W/O CPA	33472-6216	A-BLK-CLIP	GC	PLR		M	R							7	8		10	11	12	SALEABLE		N/A	N/A
KEY A, BLACK, WITH CLIPSLOT, W/O CPA	33472-6217	A-BLK-CLIP	GC	PLR		M	R				4	5		7	8				12	SALEABLE		N/A	N/A
KEY A, BLACK, WITH CLIPSLOT, W/O CPA	33472-6218	A-BLK-CLIP	GC	PLR		M	R	1	2		4	5	6		8		10	11		SALEABLE		N/A	N/A
KEY A, BLACK, WITH CLIPSLOT, W/O CPA	33472-6219	A-BLK-CLIP	GC	PLR		M	R					5		7	8	9	10	11	12	SALEABLE		N/A	N/A
KEY A, YELLOW, W/O CPA	33472-6220	A-YW	GC	PLR		M	R			3			6	7	8	9	10	11	12	SALEABLE		34951-1210	34951-1220
KEY A, YELLOW, W/CPA	33472-6221	A-YW	GC	PLR	CPA	M	R			3			6	7	8	9	10	11	12	SALEABLE		34951-1210	34951-1220
KEY C, DARK GRAY, W/CPA	33472-6222	C-DG	GC	PLR	CPA	M	R										10	11		SALEABLE		34951-1210	34951-1220
KEY A, BLACK, W/CPA	33472-6223	A-BLK	GC	PLR	CPA	M	R						6				10	11	12	SALEABLE		34951-1210	34951-1220
KEY B, LIGHT GRAY, W/CPA	33472-6224	B-LG	GC	PLR	CPA	M	R				4		6						12	SALEABLE		34951-1210	34951-1220
KEY B, LIGHT GRAY, WITH CLIPSLOT, W/O CPA	33472-6225	B-LG-CLIP	GC	PLR		M	R	1	2	3	4				8					SALEABLE		N/A	N/A
KEY A, BLACK, W/O CPA	33472-6226	A-BLK	GC	PLR		M	R							7		9				SALEABLE		34951-1210	34951-1220
KEY B, LIGHT GRAY, W/O CPA	33472-6227	B-LG	GC	PLR		M	R	1	2	3				7	8	9			12	SALEABLE		34951-1210	34951-1220

MX150 RECEPTACLE 2X6 SEALED ASSEMBLY MAT SEAL
BOM AND PIN OUT SHEET

ASSEMBLY DESCRIPTION	ASSEMBLY PART NUMBER	COMPONENT						BLOCKED TERMINALS												STATUS	COMMENTS	OPTIONAL ATTATCHMENTS SOLD SEPERATELY	
		THE PRESENCE OF AN ABBREVIATION INDICATES THE PRESENCE OF THAT COMPONENT.						CAVITY WITH A NUMBER INDICATES BLOCKED TERMINAL POSITION CAVITY WITHOUT A NUMBER INDICATES OPEN TERMINAL POSITION															
		HOUSING KEY/COLOR	GROMMET CAP	PLR	CPA	MAT SEAL	RING SEAL	1	2	3	4	5	6	7	8	9	10	11	12			BACKSHELL WITH RIBS	BACKSHELL WITHOUT RIBS
KEY B, LIGHT GRAY, W/O CPA	33472-6228	B-LG	GC	PLR		M	R	1	2	3	4	5		7				11	12	SALEABLE		34951-1210	34951-1220
KEY B, LIGHT GRAY, W/O CPA	33472-6229	B-LG	GC	PLR		M	R	1	2	3	4	5	6	7			10	11	12	SALEABLE		34951-1210	34951-1220
KEY B, LIGHT GRAY, W/O CPA	33472-6230	B-LG	GC	PLR		M	R						6	7			10	11	12	SALEABLE		34951-1210	34951-1220
KEY B, LIGHT GRAY, W/O CPA	33472-6231	B-LG	GC	PLR		M	R						6	7	8	9	10	11	12	SALEABLE		34951-1210	34951-1220
KEY B, LIGHT GRAY, W/O CPA	33472-6232	B-LG	GC	PLR		M	R			3				7						SALEABLE		34951-1210	34951-1220

molex

MX150 RECEPTACLE 2X8 SEALED ASSEMBLY MAT SEAL
BOM AND PIN OUT SHEET

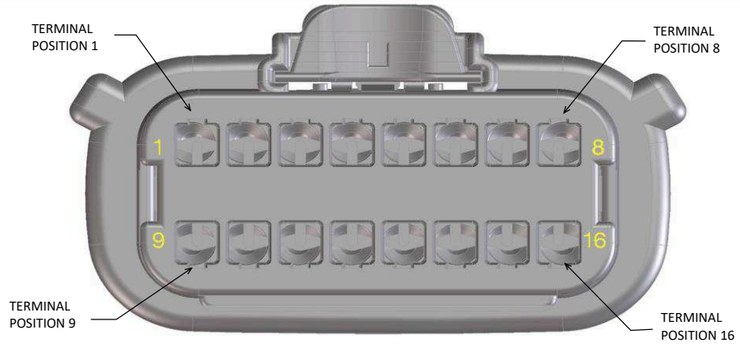

ABBREVIATION	DESCRIPTION	COLOR	MATERIAL
A-BLK	HOUSING, KEYING OPTION A	BLACK	SPS/NYLON GF20
B-LG	HOUSING, KEYING OPTION B	LIGHT GRAY	SPS/NYLON GF20
C-BR	HOUSING, KEYING OPTION C	BROWN	SPS/NYLON GF20
D-GR	HOUSING, KEYING OPTION D	GREEN	SPS/NYLON GF20
C-DG	HOUSING, KEYING OPTION C	DARK GRAY	SPS/NYLON GF20
D-SG	HOUSING, KEYING OPTION D	STONE GRAY	SPS/NYLON GF20
A-YW	HOUSING, KEYING OPTION A	YELLOW	SPS/NYLON GF20
A-BLK-CLIP	HOUSING, KEYING OPTION A WITH CLIPSLOT	BLACK	SPS/NYLON GF20
B-LG-CLIP	HOUSING, KEYING OPTION B WITH CLIPSLOT	LIGHT GRAY	SPS/NYLON GF20
C-DG-CLIP	HOUSING, KEYING OPTION C WITH CLIPSLOT	DARK GRAY	SPS/NYLON GF20
D-SG-CLIP	HOUSING, KEYING OPTION D WITH CLIPSLOT	STONE GRAY	SPS/NYLON GF20
GC	GROMMET CAP	BLACK	SPS/NYLON GF20
PLR	PLR	NATURAL	SPS/NYLON GF20
CPA	CPA	RED	PBT GF30
M	MAT SEAL	LIGHT BLUE	INHERENTLY LUBRICATED SILICONE
R	RING SEAL	GREEN	INHERENTLY LUBRICATED SILICONE

FOR ADDITIONAL INFORMATION SEE SD-33472-0001

ASSEMBLY DESCRIPTION	ASSEMBLY PART NUMBER	COMPONENT						BLOCKED TERMINALS																STATUS	COMMENTS	OPTIONAL ATTATCHMENTS SOLD SEPERATELY			
		THE PRESENCE OF AN ABBREVIATION INDICATES THE PRESENCE OF THAT COMPONENT.						CAVITY WITH A NUMBER INDICATES BLOCKED TERMINAL POSITION CAVITY WITHOUT A NUMBER INDICATES OPEN TERMINAL POSITION																					
		HOUSING KEY/COLOR	GROMMET CAP	PLR	CPA	MAT SEAL	RING SEAL	1	2	3	4	5	6	7	8	9	10	11	12	13	14	15	16			BACKSHELL WITH RIBS	BACKSHELL WITHOUT RIBS	90˚ ADAPTOR WITH RIBS	90˚ ADAPTOR WITHOUT RIBS
KEY A, BLACK, W/O CPA	33472-1601	A-BLK	GC	PLR		M	R																	SALEABLE		N/A	N/A	N/A	N/A
KEY B, LIGHT GRAY, W/O CPA	33472-1602	B-LG	GC	PLR		M	R																	SALEABLE		N/A	N/A	N/A	N/A
KEY C, BROWN, W/O CPA	33472-1603	C-BR	GC	PLR		M	R																	NOT RECOMMENDED	SEE P/N 33472-1767	N/A	N/A	N/A	N/A
KEY D, GREEN, W/O CPA	33472-1604	D-GR	GC	PLR		M	R																	NOT RECOMMENDED	SEE P/N 33472-1768	N/A	N/A	N/A	N/A
VOID KEY	33472-1605																												
KEY A, BLACK, W/CPA	33472-1606	A-BLK	GC	PLR	CPA	M	R																	SALEABLE		N/A	N/A	N/A	N/A
KEY B, LIGHT GRAY, W/CPA	33472-1607	B-LG	GC	PLR	CPA	M	R																	SALEABLE		N/A	N/A	N/A	N/A
KEY C, BROWN, W/CPA	33472-1608	C-BR	GC	PLR	CPA	M	R																	NOT RECOMMENDED	SEE P/N 33472-1769	N/A	N/A	N/A	N/A
KEY D, GREEN, W/CPA	33472-1609	D-GR	GC	PLR	CPA	M	R																	NOT RECOMMENDED	SEE P/N 33472-1770	N/A	N/A	N/A	N/A
VOID KEY	33472-1610																												
KEY A, BLACK, W/O CPA	33472-1611	A-BLK	GC	PLR		M	R								8									SALEABLE		N/A	N/A	N/A	N/A
KEY B, LIGHT GRAY, W/O CPA	33472-1612	B-LG	GC	PLR		M	R								8									SALEABLE		N/A	N/A	N/A	N/A
KEY C, BROWN, W/O CPA	33472-1613	C-BR	GC	PLR		M	R								8									NOT RECOMMENDED		N/A	N/A	N/A	N/A
KEY D, GREEN, W/O CPA	33472-1614	D-GR	GC	PLR		M	R								8									NOT RECOMMENDED		N/A	N/A	N/A	N/A
VOID KEY	33472-1615																												
KEY A, BLACK, W/CPA	33472-1616	A-BLK	GC	PLR	CPA	M	R								8									SALEABLE		N/A	N/A	N/A	N/A
KEY B, LIGHT GRAY, W/CPA	33472-1617	B-LG	GC	PLR	CPA	M	R								8									SALEABLE		N/A	N/A	N/A	N/A
KEY C, BROWN, W/CPA	33472-1618	C-BR	GC	PLR	CPA	M	R								8									NOT RECOMMENDED		N/A	N/A	N/A	N/A
KEY D, GREEN, W/CPA	33472-1619	D-GR	GC	PLR	CPA	M	R								8									NOT RECOMMENDED		N/A	N/A	N/A	N/A
VOID KEY	33472-1620																												
KEY A, BLACK, W/O CPA	33472-1621	A-BLK	GC	PLR		M	R	1	2	3	4	5	6	7	8	9	10	11	12	13	14	15	16	SALEABLE		N/A	N/A	N/A	N/A
KEY B, LIGHT GRAY, W/O CPA	33472-1622	B-LG	GC	PLR		M	R	1	2	3	4	5	6	7	8	9	10	11	12	13	14	15	16	SALEABLE		N/A	N/A	N/A	N/A
KEY C, BROWN, W/O CPA	33472-1623	C-BR	GC	PLR		M	R	1	2	3	4	5	6	7	8	9	10	11	12	13	14	15	16	NOT RECOMMENDED		N/A	N/A	N/A	N/A
KEY D, GREEN, W/O CPA	33472-1624	D-GR	GC	PLR		M	R	1	2	3	4	5	6	7	8	9	10	11	12	13	14	15	16	NOT RECOMMENDED		N/A	N/A	N/A	N/A
VOID KEY	33472-1625																												
KEY A, BLACK, W/CPA	33472-1626	A-BLK	GC	PLR	CPA	M	R	1	2	3	4	5	6	7	8	9	10	11	12	13	14	15	16	SALEABLE		N/A	N/A	N/A	N/A
KEY B, LIGHT GRAY, W/CPA	33472-1627	B-LG	GC	PLR	CPA	M	R	1	2	3	4	5	6	7	8	9	10	11	12	13	14	15	16	SALEABLE		N/A	N/A	N/A	N/A
KEY C, BROWN, W/CPA	33472-1628	C-BR	GC	PLR	CPA	M	R	1	2	3	4	5	6	7	8	9	10	11	12	13	14	15	16	NOT RECOMMENDED		N/A	N/A	N/A	N/A
KEY D, GREEN, W/CPA	33472-1629	D-GR	GC	PLR	CPA	M	R	1	2	3	4	5	6	7	8	9	10	11	12	13	14	15	16	NOT RECOMMENDED		N/A	N/A	N/A	N/A
VOID KEY	33472-1630																												
KEY A, BLACK, W/O CPA	33472-1631	A-BLK	GC	PLR		M	R								8	9								SALEABLE		N/A	N/A	N/A	N/A
KEY B, LIGHT GRAY, W/O CPA	33472-1632	B-LG	GC	PLR		M	R								8	9								SALEABLE		N/A	N/A	N/A	N/A
KEY C, BROWN, W/O CPA	33472-1633	C-BR	GC	PLR		M	R								8	9								NOT RECOMMENDED		N/A	N/A	N/A	N/A
KEY D, GREEN, W/O CPA	33472-1634	D-GR	GC	PLR		M	R								8	9								NOT RECOMMENDED		N/A	N/A	N/A	N/A
VOID KEY	33472-1635																												
KEY A, BLACK, W/CPA	33472-1636	A-BLK	GC	PLR	CPA	M	R								8	9								SALEABLE		N/A	N/A	N/A	N/A
KEY B, LIGHT GRAY, W/CPA	33472-1637	B-LG	GC	PLR	CPA	M	R								8	9								SALEABLE		N/A	N/A	N/A	N/A
KEY C, BROWN, W/CPA	33472-1638	C-BR	GC	PLR	CPA	M	R								8	9								NOT RECOMMENDED		N/A	N/A	N/A	N/A
KEY D, GREEN, W/CPA	33472-1639	D-GR	GC	PLR	CPA	M	R								8	9								NOT RECOMMENDED		N/A	N/A	N/A	N/A
VOID KEY	33472-1640																												
KEY A, BLACK, W/O CPA	33472-1641	A-BLK	GC	PLR		M	R	1							8	9								SALEABLE		N/A	N/A	N/A	N/A
KEY B, LIGHT GRAY, W/O CPA	33472-1642	B-LG	GC	PLR		M	R	1							8	9								SALEABLE		N/A	N/A	N/A	N/A
KEY C, BROWN, W/O CPA	33472-1643	C-BR	GC	PLR		M	R	1							8	9								NOT RECOMMENDED		N/A	N/A	N/A	N/A
KEY D, GREEN, W/O CPA	33472-1644	D-GR	GC	PLR		M	R	1							8	9								NOT RECOMMENDED		N/A	N/A	N/A	N/A
VOID KEY	33472-1645																												
KEY A, BLACK, W/CPA	33472-1646	A-BLK	GC	PLR	CPA	M	R	1							8	9								SALEABLE		N/A	N/A	N/A	N/A
KEY B, LIGHT GRAY, W/CPA	33472-1647	B-LG	GC	PLR	CPA	M	R	1							8	9								SALEABLE		N/A	N/A	N/A	N/A
KEY C, BROWN, W/CPA	33472-1648	C-BR	GC	PLR	CPA	M	R	1							8	9								NOT RECOMMENDED		N/A	N/A	N/A	N/A
KEY D, GREEN, W/CPA	33472-1649	D-GR	GC	PLR	CPA	M	R	1							8	9								NOT RECOMMENDED		N/A	N/A	N/A	N/A
VOID KEY	33472-1650																												
KEY A, BLACK, W/O CPA	33472-1651	A-BLK	GC	PLR		M	R															15		SALEABLE		N/A	N/A	N/A	N/A
KEY A, BLACK, W/CPA	33472-1652	A-BLK	GC	PLR	CPA	M	R															15		SALEABLE		N/A	N/A	N/A	N/A
KEY A, BLACK, W/O CPA	33472-1653	A-BLK	GC	PLR		M	R	1							8	9							16	SALEABLE		N/A	N/A	N/A	N/A
KEY B, LIGHT GRAY, W/O CPA	33472-1654	B-LG	GC	PLR		M	R	1							8	9							16	SALEABLE		N/A	N/A	N/A	N/A
KEY C, BROWN, W/O CPA	33472-1655	C-BR	GC	PLR		M	R	1							8	9							16	NOT RECOMMENDED		N/A	N/A	N/A	N/A
KEY D, GREEN, W/O CPA	33472-1656	D-GR	GC	PLR		M	R	1							8	9							16	NOT RECOMMENDED		N/A	N/A	N/A	N/A
VOID KEY	33472-1657																												
KEY A, BLACK, W/CPA	33472-1658	A-BLK	GC	PLR	CPA	M	R	1							8	9							16	SALEABLE		N/A	N/A	N/A	N/A
KEY B, LIGHT GRAY, W/CPA	33472-1659	B-LG	GC	PLR	CPA	M	R	1							8	9							16	SALEABLE		N/A	N/A	N/A	N/A
KEY C, BROWN, W/CPA	33472-1660	C-BR	GC	PLR	CPA	M	R	1							8	9							16	NOT RECOMMENDED		N/A	N/A	N/A	N/A
KEY D, GREEN, W/CPA	33472-1661	D-GR	GC	PLR	CPA	M	R	1							8	9							16	NOT RECOMMENDED		N/A	N/A	N/A	N/A
VOID KEY	33472-1662																												
KEY A, BLACK, W/O CPA	33472-1663	A-BLK	GC	PLR		M	R	1			4		6	7	8	9			12	13	14			SALEABLE		N/A	N/A	N/A	N/A
KEY A, BLACK, W/O CPA	33472-1664	A-BLK	GC	PLR		M	R			3	4	5		7		9	10	11	12	13	14	15	16	SALEABLE		N/A	N/A	N/A	N/A
KEY A, BLACK, W/O CPA	33472-1665	A-BLK	GC	PLR		M	R							7	8	9			12	13	14			SALEABLE		N/A	N/A	N/A	N/A
KEY A, BLACK, W/O CPA	33472-1666	A-BLK	GC	PLR		M	R			3	4	5					10	11	12	13	14	15	16	SALEABLE		N/A	N/A	N/A	N/A
KEY A, BLACK, W/O CPA	33472-1667	A-BLK	GC	PLR		M	R			3	4	5				9	10	11	12	13	14	15	16	SALEABLE		N/A	N/A	N/A	N/A
KEY A, BLACK, W/O CPA	33472-1668	A-BLK	GC	PLR		M	R	1				5												SALEABLE		N/A	N/A	N/A	N/A
KEY B, LIGHT GRAY, W/O CPA	33472-1669	B-LG	GC	PLR		M	R								8				12	13	14	15	16	SALEABLE		N/A	N/A	N/A	N/A
KEY B, LIGHT GRAY, W/O CPA	33472-1670	B-LG	GC	PLR		M	R								8					13	14	15	16	SALEABLE		N/A	N/A	N/A	N/A
KEY B, LIGHT GRAY, W/O CPA	33472-1671	B-LG	GC	PLR		M	R										10	11						SALEABLE		N/A	N/A	N/A	N/A
KEY B, LIGHT GRAY, W/O CPA	33472-1672	B-LG	GC	PLR		M	R										10	11	12					SALEABLE		N/A	N/A	N/A	N/A
KEY A, BLACK, W/CPA	33472-1673	A-BLK	GC	PLR	CPA	M	R										10	11		13	14	15	16	SALEABLE		N/A	N/A	N/A	N/A

molex

MX150 RECEPTACLE 2X8 SEALED ASSEMBLY MAT SEAL
BOM AND PIN OUT SHEET

ASSEMBLY DESCRIPTION	ASSEMBLY PART NUMBER	COMPONENT						BLOCKED TERMINALS																STATUS	COMMENTS	OPTIONAL ATTATCHMENTS SOLD SEPERATELY			
		THE PRESENCE OF AN ABBREVIATION INDICATES THE PRESENCE OF THAT COMPONENT.						CAVITY WITH A NUMBER INDICATES BLOCKED TERMINAL POSITION CAVITY WITHOUT A NUMBER INDICATES OPEN TERMINAL POSITION																					
		HOUSING KEY/COLOR	GROMMET CAP	PLR	CPA	MAT SEAL	RING SEAL	1	2	3	4	5	6	7	8	9	10	11	12	13	14	15	16			BACKSHELL WITH RIBS	BACKSHELL WITHOUT RIBS	90˚ ADAPTOR WITH RIBS	90˚ ADAPTOR WITHOUT RIBS
KEY B, LIGHT GRAY, W/O CPA	33472-1674	B-LG	GC	PLR		M	R												12					SALEABLE		N/A	N/A	N/A	N/A
KEY A, BLACK, W/CPA	33472-1675	A-BLK	GC	PLR	CPA	M	R										10	11				15	16	SALEABLE		N/A	N/A	N/A	N/A
KEY A, BLACK, W/CPA	33472-1676	A-BLK	GC	PLR	CPA	M	R								8	9	10	11	12			15	16	SALEABLE		N/A	N/A	N/A	N/A
KEY B, LIGHT GRAY, W/O CPA	33472-1677	B-LG	GC	PLR		M	R				4		6	7	8				12		14			SALEABLE		N/A	N/A	N/A	N/A
KEY A, BLACK, W/O CPA	33472-1678	A-BLK	GC	PLR		M	R					5												SALEABLE		N/A	N/A	N/A	N/A
KEY A, BLACK, W/O CPA	33472-1679	A-BLK	GC	PLR		M	R					5											16	SALEABLE		N/A	N/A	N/A	N/A
KEY A, BLACK, W/CPA	33472-1680	A-BLK	GC	PLR	CPA	M	R															15	16	SALEABLE		N/A	N/A	N/A	N/A
KEY A, BLACK, W/O CPA	33472-1681	A-BLK	GC	PLR		M	R		2			5		7			10				14			SALEABLE		N/A	N/A	N/A	N/A
KEY B, LIGHT GRAY, W/O CPA	33472-1682	B-LG	GC	PLR		M	R				4													SALEABLE		N/A	N/A	N/A	N/A
KEY A, BLACK, W/O CPA	33472-1683	A-BLK	GC	PLR		M	R																16	SALEABLE		N/A	N/A	N/A	N/A
KEY A, BLACK, W/O CPA	33472-1684	A-BLK	GC	PLR		M	R				4								12					SALEABLE		N/A	N/A	N/A	N/A
KEY B, LIGHT GRAY, W/O CPA	33472-1685	B-LG	GC	PLR		M	R																16	SALEABLE		N/A	N/A	N/A	N/A
KEY B, LIGHT GRAY, W/O CPA	33472-1686	B-LG	GC	PLR		M	R				4								12		14			SALEABLE		N/A	N/A	N/A	N/A
KEY B, LIGHT GRAY, W/O CPA	33472-1687	B-LG	GC	PLR		M	R														14			SALEABLE		N/A	N/A	N/A	N/A
KEY A, BLACK, W/O CPA	33472-1688	A-BLK	GC	PLR		M	R		2															SALEABLE		N/A	N/A	N/A	N/A
KEY B, LIGHT GRAY, W/O CPA	33472-1689	B-LG	GC	PLR		M	R		2		4								12		14			SALEABLE		N/A	N/A	N/A	N/A
KEY B, LIGHT GRAY, W/O CPA	33472-1690	B-LG	GC	PLR		M	R		2												14			SALEABLE		N/A	N/A	N/A	N/A
KEY A, BLACK, W/O CPA	33472-1691	A-BLK	GC	PLR		M	R		2		4								12					SALEABLE		N/A	N/A	N/A	N/A
KEY A, BLACK, W/O CPA	33472-1692	A-BLK	GC	PLR		M	R				4				8				12					SALEABLE		N/A	N/A	N/A	N/A
KEY B, LIGHT GRAY, W/O CPA	33472-1693	B-LG	GC	PLR		M	R				4				8				12		14			SALEABLE		N/A	N/A	N/A	N/A
KEY B, LIGHT GRAY, W/O CPA	33472-1694	B-LG	GC	PLR		M	R								8						14			SALEABLE		N/A	N/A	N/A	N/A
KEY A, BLACK, W/O CPA	33472-1695	A-BLK	GC	PLR		M	R		2						8									SALEABLE		N/A	N/A	N/A	N/A
NOT AVAILABLE	33472-1696																												
NOT AVAILABLE	33472-1697																												
NOT AVAILABLE	33472-1698																												
NOT AVAILABLE	33472-1699																												
NOT AVAILABLE	33472-1700																												
KEY A, BLACK, W/O CPA	33472-1701	A-BLK	GC	PLR		M	R		2		4				8				12					SALEABLE		N/A	N/A	N/A	N/A
KEY B, LIGHT GRAY, W/O CPA	33472-1702	B-LG	GC	PLR		M	R		2		4				8				12		14			SALEABLE		N/A	N/A	N/A	N/A
KEY B, LIGHT GRAY, W/O CPA	33472-1703	B-LG	GC	PLR		M	R		2						8						14			SALEABLE		N/A	N/A	N/A	N/A
KEY A, BLACK, W/O CPA	33472-1704	A-BLK	GC	PLR		M	R		2		4													SALEABLE		N/A	N/A	N/A	N/A
KEY B, LIGHT GRAY, W/O CPA	33472-1705	B-LG	GC	PLR		M	R		2		4										14			SALEABLE		N/A	N/A	N/A	N/A
KEY A, BLACK, W/O CPA	33472-1706	A-BLK	GC	PLR		M	R		2				6				10			13	14	15	16	SALEABLE		N/A	N/A	N/A	N/A
KEY A, BLACK, W/O CPA	33472-1707	A-BLK	GC	PLR		M	R		2				6				10	11		13	14	15	16	SALEABLE		N/A	N/A	N/A	N/A
KEY A, BLACK, W/O CPA	33472-1708	A-BLK	GC	PLR		M	R		2				6				10			13	14			SALEABLE		N/A	N/A	N/A	N/A
KEY A, BLACK, W/O CPA	33472-1709	A-BLK	GC	PLR		M	R				4				8									SALEABLE		N/A	N/A	N/A	N/A
KEY A, BLACK, W/O CPA	33472-1710	A-BLK	GC	PLR		M	R		2				6					11						SALEABLE		N/A	N/A	N/A	N/A
KEY A, BLACK, W/O CPA	33472-1711	A-BLK	GC	PLR		M	R		2				6											SALEABLE		N/A	N/A	N/A	N/A
KEY A, BLACK, W/CPA	33472-1712	A-BLK	GC	PLR	CPA	M	R					5	6	7	8					13				SALEABLE		N/A	N/A	N/A	N/A
KEY A, BLACK, W/CPA	33472-1713	A-BLK	GC	PLR	CPA	M	R					5	6	7	8			11	12	13	14			SALEABLE		N/A	N/A	N/A	N/A
KEY A, BLACK, W/CPA	33472-1714	A-BLK	GC	PLR	CPA	M	R					5	6	7	8				12	13	14			SALEABLE		N/A	N/A	N/A	N/A
KEY B, LIGHT GRAY, W/CPA	33472-1715	B-LG	GC	PLR	CPA	M	R	1	2	3	4	5	6		8		10		12	13				SALEABLE		N/A	N/A	N/A	N/A
KEY B, LIGHT GRAY, W/CPA	33472-1716	B-LG	GC	PLR	CPA	M	R	1		3	4	5			8		10							SALEABLE		N/A	N/A	N/A	N/A
KEY B, LIGHT GRAY, W/CPA	33472-1717	B-LG	GC	PLR	CPA	M	R	1			4	5			8		10							SALEABLE		N/A	N/A	N/A	N/A
KEY A, BLACK, W/CPA	33472-1718	A-BLK	GC	PLR	CPA	M	R					5	6	7	8			11		13				SALEABLE		N/A	N/A	N/A	N/A
KEY A, BLACK, W/CPA	33472-1719	A-BLK	GC	PLR	CPA	M	R				4	5	6									15	16	SALEABLE		N/A	N/A	N/A	N/A
KEY A, BLACK, W/CPA	33472-1720	A-BLK	GC	PLR	CPA	M	R			3	4	5	6									15	16	SALEABLE		N/A	N/A	N/A	N/A
KEY A, BLACK, W/CPA	33472-1721	A-BLK	GC	PLR	CPA	M	R								8					13	14	15	16	SALEABLE		N/A	N/A	N/A	N/A
KEY A, BLACK, W/CPA	33472-1722	A-BLK	GC	PLR	CPA	M	R	1	2	3	4	5	6		8					13		15	16	SALEABLE		N/A	N/A	N/A	N/A
KEY A, BLACK, W/CPA	33472-1723	A-BLK	GC	PLR	CPA	M	R							7	8			11	12	13	14			SALEABLE		N/A	N/A	N/A	N/A
KEY A, BLACK, W/CPA	33472-1724	A-BLK	GC	PLR	CPA	M	R							7	8				12	13	14			SALEABLE		N/A	N/A	N/A	N/A
KEY A, BLACK, W/CPA	33472-1725	A-BLK	GC	PLR	CPA	M	R							7	8					13				SALEABLE		N/A	N/A	N/A	N/A
KEY A, BLACK, W/CPA	33472-1726	A-BLK	GC	PLR	CPA	M	R							7	8			11		13				SALEABLE		N/A	N/A	N/A	N/A
KEY A, BLACK, W/CPA	33472-1727	A-BLK	GC	PLR	CPA	M	R													13	14	15	16	SALEABLE		N/A	N/A	N/A	N/A
KEY B, LIGHT GRAY, W/CPA	33472-1728	B-LG	GC	PLR	CPA	M	R				4	5			8				12					SALEABLE		N/A	N/A	N/A	N/A
KEY B, LIGHT GRAY, W/CPA	33472-1729	B-LG	GC	PLR	CPA	M	R	1	2		4	5	6		8		10		12	13				SALEABLE		N/A	N/A	N/A	N/A
KEY B, LIGHT GRAY, W/CPA	33472-1730	B-LG	GC	PLR	CPA	M	R		2		4	5	6		8		10	11	12	13			16	SALEABLE		N/A	N/A	N/A	N/A
KEY B, LIGHT GRAY, W/CPA	33472-1731	B-LG	GC	PLR	CPA	M	R				4	5							12	13				SALEABLE		N/A	N/A	N/A	N/A
KEY B, LIGHT GRAY, W/CPA	33472-1732	B-LG	GC	PLR	CPA	M	R		2		4	5	6		8		10		12	13				SALEABLE		N/A	N/A	N/A	N/A
KEY B, LIGHT GRAY, W/CPA	33472-1733	B-LG	GC	PLR	CPA	M	R						6					11						SALEABLE		N/A	N/A	N/A	N/A
KEY B, LIGHT GRAY, W/CPA	33472-1734	B-LG	GC	PLR	CPA	M	R			3			6					11						SALEABLE		N/A	N/A	N/A	N/A
KEY B, LIGHT GRAY, W/CPA	33472-1735	B-LG	GC	PLR	CPA	M	R		2	3	4	5	6		8		10		12	13				SALEABLE		N/A	N/A	N/A	N/A
KEY A, BLACK, W/O CPA	33472-1736	A-BLK	GC	PLR		M	R		2		4	5	6				10		12	13	14			SALEABLE		N/A	N/A	N/A	N/A
KEY B, LIGHT GRAY, W/CPA	33472-1737	B-LG	GC	PLR	CPA	M	R	1	2	3	4	5	6		8		10	11	12	13			16	SALEABLE		N/A	N/A	N/A	N/A
KEY B, LIGHT GRAY, W/CPA	33472-1738	B-LG	GC	PLR	CPA	M	R										10							SALEABLE		N/A	N/A	N/A	N/A
KEY B, LIGHT GRAY, W/CPA	33472-1739	B-LG	GC	PLR	CPA	M	R				4	5					10		12	13				SALEABLE		N/A	N/A	N/A	N/A
KEY A, BLACK, W/CPA	33472-1740	A-BLK	GC	PLR	CPA	M	R					5								13				SALEABLE		N/A	N/A	N/A	N/A
KEY A, BLACK, W/CPA	33472-1741	A-BLK	GC	PLR	CPA	M	R							7	8			11	12	13	14	15		SALEABLE		N/A	N/A	N/A	N/A
KEY A, BLACK, W/CPA	33472-1742	A-BLK	GC	PLR	CPA	M	R							7	8				12	13	14	15		SALEABLE		N/A	N/A	N/A	N/A
KEY A, BLACK, W/CPA	33472-1743	A-BLK	GC	PLR	CPA	M	R							7	8									SALEABLE		N/A	N/A	N/A	N/A
KEY A, BLACK, W/CPA	33472-1744	A-BLK	GC	PLR	CPA	M	R											11						SALEABLE		N/A	N/A	N/A	N/A
KEY A, BLACK, W/O CPA	33472-1745	A-BLK	GC	PLR		M	R										10	11				15	16	SALEABLE		N/A	N/A	N/A	N/A
KEY A, BLACK, W/O CPA	33472-1746	A-BLK	GC	PLR		M	R	1	2	3	4	5	6					11	12	13	14	15	16	SALEABLE		N/A	N/A	N/A	N/A
KEY A, BLACK, W/O CPA	33472-1747	A-BLK	GC	PLR		M	R	1	2	3	4	5	6		8	9					14	15	16	SALEABLE		N/A	N/A	N/A	N/A
KEY A, BLACK, W/O CPA	33472-1748	A-BLK	GC	PLR		M	R	1	2	3	4	5	6						12	13	14	15	16	SALEABLE		N/A	N/A	N/A	N/A
KEY A, BLACK, W/O CPA	33472-1749	A-BLK	GC	PLR		M	R							7	8	9	10	11	12	13	14	15	16	SALEABLE		N/A	N/A	N/A	N/A
KEY A, BLACK, W/O CPA	33472-1750	A-BLK	GC	PLR		M	R	1	2	3	4	5	6								14	15	16	SALEABLE		N/A	N/A	N/A	N/A
KEY A, BLACK, W/O CPA	33472-1751	A-BLK	GC	PLR		M	R								8	9	10	11	12	13	14	15	16	SALEABLE		N/A	N/A	N/A	N/A
KEY A, BLACK, W/O CPA	33472-1752	A-BLK	GC	PLR		M	R										10	11	12	13	14	15	16	SALEABLE		N/A	N/A	N/A	N/A
KEY A, BLACK, W/O CPA	33472-1753	A-BLK	GC	PLR		M	R											11	12	13	14	15	16	SALEABLE		N/A	N/A	N/A	N/A
KEY A, BLACK, W/O CPA	33472-1754	A-BLK	GC	PLR		M	R	1	2	3	4	5	6											SALEABLE		N/A	N/A	N/A	N/A
KEY A, BLACK, W/O CPA	33472-1755	A-BLK	GC	PLR		M	R								8	9					14	15	16	SALEABLE		N/A	N/A	N/A	N/A
KEY A, BLACK, W/O CPA	33472-1756	A-BLK	GC	PLR		M	R												12	13	14	15	16	SALEABLE		N/A	N/A	N/A	N/A
KEY A, BLACK, W/O CPA	33472-1757	A-BLK	GC	PLR		M	R							7	8	9	10							SALEABLE		N/A	N/A	N/A	N/A
KEY A, BLACK, W/O CPA	33472-1758	A-BLK	GC	PLR		M	R														14	15	16	SALEABLE		N/A	N/A	N/A	N/A
KEY A, BLACK, W/O CPA	33472-1759	A-BLK	GC	PLR		M	R		2				6	7	8									SALEABLE		N/A	N/A	N/A	N/A
KEY A, BLACK, W/O CPA	33472-1760	A-BLK	GC	PLR		M	R		2		4		6	7	8				12					SALEABLE		N/A	N/A	N/A	N/A
KEY A, BLACK, W/O CPA	33472-1761	A-BLK	GC	PLR		M	R		2			5	6	7	8	9	10		12		14	15	16	SALEABLE		N/A	N/A	N/A	N/A
KEY A, BLACK, W/O CPA	33472-1762	A-BLK	GC	PLR		M	R		2			5	6	7	8		10		12		14	15		SALEABLE		N/A	N/A	N/A	N/A
KEY A, BLACK, W/O CPA	33472-1763	A-BLK	GC	PLR		M	R		2							9	10					15	16	SALEABLE		N/A	N/A	N/A	N/A
KEY A, BLACK, W/O CPA	33472-1764	A-BLK	GC	PLR		M	R		2								10					15		SALEABLE		N/A	N/A	N/A	N/A
KEY A, BLACK, W/O CPA	33472-1765	A-BLK	GC	PLR		M	R	1	2	3	4	5	6	7	8	9	10							SALEABLE		N/A	N/A	N/A	N/A
KEY A, BLACK, W/O CPA	33472-1766	A-BLK	GC	PLR		M	R	1	2	3	4	5	6				10	11	12	13	14	15	16	SALEABLE		N/A	N/A	N/A	N/A
KEY C, DARK GRAY, W/O CPA	33472-1767	C-DG	GC	PLR		M	R																	SALEABLE		N/A	N/A	N/A	N/A
KEY D, STONE GRAY, W/O CPA	33472-1768	D-SG	GC	PLR		M	R																	SALEABLE		N/A	N/A	N/A	N/A
KEY C, DARK GRAY, W/CPA	33472-1769	C-DG	GC	PLR	CPA	M	R																	SALEABLE		N/A	N/A	N/A	N/A
KEY D, STONE GRAY, W/CPA	33472-1770	D-SG	GC	PLR	CPA	M	R																	SALEABLE		N/A	N/A	N/A	N/A
KEY B, LIGHT GRAY, W/O CPA	33472-1771	B-LG	GC	PLR		M	R	1	2	3	4	5	6	7	8	9	10		12		14	15	16	SALEABLE		N/A	N/A	N/A	N/A
KEY B, LIGHT GRAY, W/O CPA	33472-1772	B-LG	GC	PLR		M	R	1	2	3	4	5	6	7	8	9	10		12		14	15		SALEABLE		N/A	N/A	N/A	N/A

molex

MX150 RECEPTACLE 2X8 SEALED ASSEMBLY MAT SEAL
BOM AND PIN OUT SHEET

ASSEMBLY DESCRIPTION	ASSEMBLY PART NUMBER	COMPONENT						BLOCKED TERMINALS																STATUS	COMMENTS	OPTIONAL ATTATCHMENTS SOLD SEPERATELY			
		THE PRESENCE OF AN ABBREVIATION INDICATES THE PRESENCE OF THAT COMPONENT.						CAVITY WITH A NUMBER INDICATES BLOCKED TERMINAL POSITION CAVITY WITHOUT A NUMBER INDICATES OPEN TERMINAL POSITION																					
		HOUSING KEY/COLOR	GROMMET CAP	PLR	CPA	MAT SEAL	RING SEAL	1	2	3	4	5	6	7	8	9	10	11	12	13	14	15	16			BACKSHELL WITH RIBS	BACKSHELL WITHOUT RIBS	90˚ ADAPTOR WITH RIBS	90˚ ADAPTOR WITHOUT RIBS
KEY B, LIGHT GRAY, W/CPA	33472-1773	B-LG	GC	PLR	CPA	M	R				4	5					10	11	12	13				SALEABLE		N/A	N/A	N/A	N/A
KEY B, LIGHT GRAY, W/CPA	33472-1774	B-LG	GC	PLR	CPA	M	R				4	5			8		10	11	12	13				SALEABLE		N/A	N/A	N/A	N/A
KEY B, LIGHT GRAY, W/CPA	33472-1775	B-LG	GC	PLR	CPA	M	R				4	5			8		10	11	12	13			16	SALEABLE		N/A	N/A	N/A	N/A
KEY B, LIGHT GRAY, W/CPA	33472-1776	B-LG	GC	PLR	CPA	M	R				4	5			8		10		12	13				SALEABLE		N/A	N/A	N/A	N/A
KEY B, LIGHT GRAY, W/CPA	33472-1777	B-LG	GC	PLR	CPA	M	R				4	5						11	12	13				SALEABLE		N/A	N/A	N/A	N/A
KEY A, BLACK, W/O CPA	33472-1778	A-BLK	GC	PLR		M	R			3	4					9	10					15	16	SALEABLE		N/A	N/A	N/A	N/A
KEY A, BLACK, W/O CPA	33472-1779	A-BLK	GC	PLR		M	R		2		4		6	7		9		11		13		15	16	SALEABLE		N/A	N/A	N/A	N/A
KEY A, BLACK, W/CPA	33472-1780	A-BLK	GC	PLR	CPA	M	R														14	15	16	SALEABLE		N/A	N/A	N/A	N/A
KEY A, BLACK, W/O CPA	33472-1781	A-BLK	GC	PLR		M	R				4	5		7										SALEABLE		N/A	N/A	N/A	N/A
KEY A, BLACK, W/CPA	33472-1782	A-BLK	GC	PLR	CPA	M	R												12	13	14	15	16	SALEABLE		N/A	N/A	N/A	N/A
KEY A, BLACK, W/O CPA	33472-1783	A-BLK	GC	PLR		M	R	1	2	3	4			7	8	9	10	11	12			15	16	SALEABLE		N/A	N/A	N/A	N/A
KEY A, BLACK, W/O CPA	33472-1784	A-BLK	GC	PLR		M	R	1	2	3	4				8	9	10	11	12				16	SALEABLE		N/A	N/A	N/A	N/A
KEY A, BLACK, W/O CPA	33472-1785	A-BLK	GC	PLR		M	R		2	3	4					9	10					15	16	SALEABLE		N/A	N/A	N/A	N/A
KEY A, BLACK, W/O CPA	33472-1786	A-BLK	GC	PLR		M	R		2	3	4	5	6	7	8	9	10		12		14	15	16	SALEABLE		N/A	N/A	N/A	N/A
KEY A, BLACK, W/O CPA	33472-1787	A-BLK	GC	PLR		M	R					5			8		10	11		13		15		SALEABLE		N/A	N/A	N/A	N/A
KEY A, BLACK, W/O CPA	33472-1788	A-BLK	GC	PLR		M	R			3		5			8		10	11		13		15		SALEABLE		N/A	N/A	N/A	N/A
KEY A, BLACK, W/O CPA	33472-1789	A-BLK	GC	PLR		M	R					5			8		10	11			14			SALEABLE		N/A	N/A	N/A	N/A
KEY A, BLACK, W/O CPA	33472-1790	A-BLK	GC	PLR		M	R			3	4	5			8		10	11	12	13	14	15		SALEABLE		N/A	N/A	N/A	N/A
KEY A, BLACK, W/O CPA	33472-1791	A-BLK	GC	PLR		M	R			3	4					9	10					15	16	SALEABLE		N/A	N/A	N/A	N/A
KEY A, BLACK, W/O CPA	33472-1792	A-BLK	GC	PLR		M	R	1		3		5		7	8		10	11			14	15		SALEABLE		N/A	N/A	N/A	N/A
KEY A, BLACK, W/O CPA	33472-1793	A-BLK	GC	PLR		M	R													13	14	15	16	SALEABLE		N/A	N/A	N/A	N/A
KEY A, BLACK, W/O CPA	33472-1794	A-BLK	GC	PLR		M	R		2		4		6	7	8				12					SALEABLE		N/A	N/A	N/A	N/A
KEY A, BLACK, W/CPA	33472-1795	A-BLK	GC	PLR	CPA	M	R												12		14			SALEABLE		N/A	N/A	N/A	N/A
KEY A, BLACK, W/O CPA	33472-1796	A-BLK	GC	PLR		M	R	1				5		7	8		10	11			14	15		SALEABLE		N/A	N/A	N/A	N/A
KEY A, BLACK, W/O CPA	33472-1797	A-BLK	GC	PLR		M	R					5			8		10	11						SALEABLE		N/A	N/A	N/A	N/A
KEY A, BLACK, W/O CPA	33472-1798	A-BLK	GC	PLR		M	R	1		3		5		7				11				15		SALEABLE		N/A	N/A	N/A	N/A
KEY B, LIGHT GRAY, W/CPA	33472-1799	B-LG	GC	PLR	CPA	M	R		2		4				8				12		14			SALEABLE		N/A	N/A	N/A	N/A
KEY A, BLACK, W/O CPA	33472-1800	A-BLK	GC	PLR		M	R	1		3		5												SALEABLE		N/A	N/A	N/A	N/A
KEY B, LIGHT GRAY, W/CPA	33472-1801	B-LG	GC	PLR	CPA	M	R				4	5			8				12	13				SALEABLE		N/A	N/A	N/A	N/A
KEY B, LIGHT GRAY, W/CPA	33472-1802	B-LG	GC	PLR	CPA	M	R		2		4	5	6		8				12	13				SALEABLE		N/A	N/A	N/A	N/A
KEY B, LIGHT GRAY, W/CPA	33472-1803	B-LG	GC	PLR	CPA	M	R		2		4	5	6		8		10		12	13				SALEABLE		N/A	N/A	N/A	N/A
KEY B, LIGHT GRAY, W/CPA	33472-1804	B-LG	GC	PLR	CPA	M	R		2	3	4	5	6		8				12	13				SALEABLE		N/A	N/A	N/A	N/A
KEY A, BLACK, W/O CPA	33472-1805	A-BLK	GC	PLR		M	R														14	15		SALEABLE		N/A	N/A	N/A	N/A
KEY A, BLACK, W/CPA	33472-1806	A-BLK	GC	PLR	CPA	M	R	1		3	4								12	13	14	15	16	SALEABLE		N/A	N/A	N/A	N/A
KEY A, BLACK, W/CPA	33472-1807	A-BLK	GC	PLR	CPA	M	R	1	2	3	4	5			8			11	12	13	14	15	16	SALEABLE		N/A	N/A	N/A	N/A
KEY A, BLACK, W/CPA	33472-1808	A-BLK	GC	PLR	CPA	M	R		2	3	4	5			8			11						SALEABLE		N/A	N/A	N/A	N/A
KEY A, BLACK, W/CPA	33472-1809	A-BLK	GC	PLR	CPA	M	R			3	4													SALEABLE		N/A	N/A	N/A	N/A
KEY A, BLACK, W/O CPA	33472-1810	A-BLK	GC	PLR		M	R	1	2	3	4	5	6	7	8					13	14	15	16	SALEABLE		N/A	N/A	N/A	N/A
KEY A, BLACK, W/O CPA	33472-1811	A-BLK	GC	PLR		M	R	1	2	3										13	14	15		SALEABLE		N/A	N/A	N/A	N/A
KEY A, BLACK, W/O CPA	33472-1812	A-BLK	GC	PLR		M	R	1	2											13	14	15		SALEABLE		N/A	N/A	N/A	N/A
KEY B, LIGHT GRAY, W/O CPA	33472-1813	B-LG	GC	PLR		M	R						6	7	8			11						SALEABLE		N/A	N/A	N/A	N/A
KEY B, LIGHT GRAY, W/O CPA	33472-1814	B-LG	GC	PLR		M	R						6	7	8			11			14			SALEABLE		N/A	N/A	N/A	N/A
KEY B, LIGHT GRAY, W/O CPA	33472-1815	B-LG	GC	PLR		M	R						6			9		11	12	13		15	16	SALEABLE		N/A	N/A	N/A	N/A
KEY B, LIGHT GRAY, W/O CPA	33472-1816	B-LG	GC	PLR		M	R						6			9	10	11	12	13	14	15	16	SALEABLE		N/A	N/A	N/A	N/A
KEY B, LIGHT GRAY, W/O CPA	33472-1817	B-LG	GC	PLR		M	R	1	2	3	4	5	6			9	10	11	12	13	14	15	16	SALEABLE		N/A	N/A	N/A	N/A
KEY A, BLACK, W/O CPA	33472-1818	A-BLK	GC	PLR		M	R									9	10	11	12	13	14	15	16	SALEABLE		N/A	N/A	N/A	N/A
KEY A, BLACK, W/CPA	33472-1819	A-BLK	GC	PLR	CPA	M	R				4	5	6	7	8	9	10	11	12	13	14	15	16	SALEABLE		N/A	N/A	N/A	N/A
KEY A, BLACK, W/CPA	33472-1820	A-BLK	GC	PLR	CPA	M	R								8	9			12	13	14	15	16	SALEABLE		N/A	N/A	N/A	N/A
KEY B, LIGHT GRAY, W/CPA	33472-1821	B-LG	GC	PLR	CPA	M	R				4	5		7					12	13				SALEABLE		N/A	N/A	N/A	N/A
KEY B, LIGHT GRAY, W/CPA	33472-1822	B-LG	GC	PLR	CPA	M	R				4	5		7			10		12	13				SALEABLE		N/A	N/A	N/A	N/A
KEY B, LIGHT GRAY, W/CPA	33472-1823	B-LG	GC	PLR	CPA	M	R				4	5		7	8		10		12	13				SALEABLE		N/A	N/A	N/A	N/A
KEY B, LIGHT GRAY, W/CPA	33472-1824	B-LG	GC	PLR	CPA	M	R				4	5		7	8	9	10		12	13				SALEABLE		N/A	N/A	N/A	N/A
KEY B, LIGHT GRAY, W/CPA	33472-1825	B-LG	GC	PLR	CPA	M	R		2		4	5	6	7	8	9	10		12	13				SALEABLE		N/A	N/A	N/A	N/A
KEY A, BLACK, W/O CPA	33472-1826	A-BLK	GC	PLR		M	R	1	2	3	4	5	6			9				13	14	15	16	SALEABLE		N/A	N/A	N/A	N/A
KEY A, BLACK, W/O CPA	33472-1827	A-BLK	GC	PLR		M	R	1	2	3	4	5	6			9	10	11	12	13	14	15	16	SALEABLE		N/A	N/A	N/A	N/A
KEY A, BLACK, W/O CPA	33472-1828	A-BLK	GC	PLR		M	R						6				10	11	12	13	14			SALEABLE		N/A	N/A	N/A	N/A
KEY A, BLACK, W/O CPA	33472-1829	A-BLK	GC	PLR		M	R	1	2	3	4	5	6				10	11	12	13	14			SALEABLE		N/A	N/A	N/A	N/A
KEY A, BLACK, W/O CPA	33472-1830	A-BLK	GC	PLR		M	R	1	2	3	4	5	6							13	14			SALEABLE		N/A	N/A	N/A	N/A
KEY A, BLACK, W/O CPA	33472-1831	A-BLK	GC	PLR		M	R						6			9	10	11	12	13	14	15	16	SALEABLE		N/A	N/A	N/A	N/A
KEY A, BLACK, W/O CPA	33472-1832	A-BLK	GC	PLR		M	R		2						8								16	SALEABLE		N/A	N/A	N/A	N/A
KEY A, BLACK, W/O CPA	33472-1833	A-BLK	GC	PLR		M	R	1	2	3	4	5	6		8		10						16	SALEABLE		N/A	N/A	N/A	N/A
KEY A, BLACK, W/O CPA	33472-1834	A-BLK	GC	PLR		M	R	1	2	3	4	5	6	7	8	9	10						16	SALEABLE		N/A	N/A	N/A	N/A
KEY A, BLACK, W/O CPA	33472-1835	A-BLK	GC	PLR		M	R	1	2	3	4	5	6	7		9		11		13		15	16	SALEABLE		N/A	N/A	N/A	N/A
KEY B, LIGHT GRAY, W/O CPA	33472-1836	B-LG	GC	PLR		M	R			3	4	5	6				10	11	12	13				SALEABLE		N/A	N/A	N/A	N/A
KEY A, BLACK, W/O CPA	33472-1837	A-BLK	GC	PLR		M	R											11	12	13	14			SALEABLE		N/A	N/A	N/A	N/A
KEY A, BLACK, W/O CPA	33472-1838	A-BLK	GC	PLR		M	R											11			14			SALEABLE		N/A	N/A	N/A	N/A
KEY A, BLACK, W/O CPA	33472-1839	A-BLK	GC	PLR		M	R	1		3								11	12	13		15	16	SALEABLE		N/A	N/A	N/A	N/A
KEY A, BLACK, W/O CPA	33472-1840	A-BLK	GC	PLR		M	R	1		3					8	9		11	12	13	14	15	16	SALEABLE		N/A	N/A	N/A	N/A
KEY A, BLACK, W/O CPA	33472-1841	A-BLK	GC	PLR		M	R	1	2			5	6	7	8									SALEABLE		N/A	N/A	N/A	N/A
KEY A, BLACK, W/O CPA	33472-1842	A-BLK	GC	PLR		M	R			3	4							11	12					SALEABLE		N/A	N/A	N/A	N/A
KEY A, BLACK, W/O CPA	33472-1843	A-BLK	GC	PLR		M	R									9				13	14	15	16	SALEABLE		N/A	N/A	N/A	N/A
KEY A, BLACK, W/O CPA	33472-1844	A-BLK	GC	PLR		M	R			3	4					9	10	11	12	13	14	15	16	SALEABLE		N/A	N/A	N/A	N/A
KEY B, LIGHT GRAY, W/O CPA	33472-1845	B-LG	GC	PLR		M	R			3	4	5	6		8	9	10	11	12	13	14			SALEABLE		N/A	N/A	N/A	N/A
KEY A, BLACK, W/O CPA	33472-1846	A-BLK	GC	PLR		M	R									9	10					15	16	SALEABLE		N/A	N/A	N/A	N/A
KEY A, BLACK, W/O CPA	33472-1847	A-BLK	GC	PLR		M	R										10					15		SALEABLE		N/A	N/A	N/A	N/A
KEY A, BLACK, W/O CPA	33472-1848	A-BLK	GC	PLR		M	R	1	2	3	4	5	6	7	8	9	10	11			14	15	16	SALEABLE		N/A	N/A	N/A	N/A
KEY A, BLACK, W/O CPA	33472-1849	A-BLK	GC	PLR		M	R		2						8						14	15	16	SALEABLE		N/A	N/A	N/A	N/A
KEY A, BLACK, W/O CPA	33472-1850	A-BLK	GC	PLR		M	R	1		3						9		11	12	13		15	16	SALEABLE		N/A	N/A	N/A	N/A
KEY A, BLACK, W/O CPA	33472-1851	A-BLK	GC	PLR		M	R	1	2	3	4	5	6		8		10				14	15	16	SALEABLE		N/A	N/A	N/A	N/A
KEY A, BLACK, W/O CPA	33472-1852	A-BLK	GC	PLR		M	R	1	2			5		7	8	9	10	11	12	13	14	15	16	SALEABLE		N/A	N/A	N/A	N/A
KEY A, BLACK, W/O CPA	33472-1853	A-BLK	GC	PLR		M	R		2			5		7		9	10	11	12	13	14	15	16	SALEABLE		N/A	N/A	N/A	N/A
KEY A, BLACK, W/O CPA	33472-1854	A-BLK	GC	PLR		M	R		2			5		7		9							16	SALEABLE		N/A	N/A	N/A	N/A
KEY A, BLACK, W/O CPA	33472-1855	A-BLK	GC	PLR		M	R					5		7									16	SALEABLE		N/A	N/A	N/A	N/A
KEY A, BLACK, W/O CPA	33472-1856	A-BLK	GC	PLR		M	R		2					7		9							16	SALEABLE		N/A	N/A	N/A	N/A
KEY A, BLACK, W/O CPA	33472-1857	A-BLK	GC	PLR		M	R							7									16	SALEABLE		N/A	N/A	N/A	N/A
KEY A, BLACK, W/O CPA	33472-1858	A-BLK	GC	PLR		M	R		2			5		7		9		11	12	13	14	15	16	SALEABLE		N/A	N/A	N/A	N/A
KEY A, BLACK, W/O CPA	33472-1859	A-BLK	GC	PLR		M	R		2			5				9			12	13	14	15		SALEABLE		N/A	N/A	N/A	N/A
KEY A, BLACK, W/O CPA	33472-1860	A-BLK	GC	PLR		M	R		2			5				9								SALEABLE		N/A	N/A	N/A	N/A
KEY A, BLACK, W/O CPA	33472-1861	A-BLK	GC	PLR		M	R		2							9								SALEABLE		N/A	N/A	N/A	N/A
KEY A, BLACK, W/O CPA	33472-1862	A-BLK	GC	PLR		M	R		2					7									16	SALEABLE		N/A	N/A	N/A	N/A
KEY A, BLACK, W/O CPA	33472-1863	A-BLK	GC	PLR		M	R	1		3					8			11	12	13	14	15	16	SALEABLE		N/A	N/A	N/A	N/A
KEY A, BLACK, W/O CPA	33472-1864	A-BLK	GC	PLR		M	R									9		11	12	13	14	15	16	SALEABLE		N/A	N/A	N/A	N/A
KEY A, BLACK, W/O CPA	33472-1865	A-BLK	GC	PLR		M	R	1			4		6	7	8		10			13	14	15		SALEABLE		N/A	N/A	N/A	N/A
KEY A, BLACK, W/CPA	33472-1866	A-BLK	GC	PLR	CPA	M	R					5												SALEABLE		N/A	N/A	N/A	N/A
KEY A, BLACK, W/O CPA	33472-1867	A-BLK	GC	PLR		M	R		2			5		7		9			12	13	14	15	16	SALEABLE		N/A	N/A	N/A	N/A
KEY A, BLACK, W/CPA	33472-1868	A-BLK	GC	PLR	CPA	M	R	1	2	3	4		6	7		9	10	11	12	13	14	15	16	SALEABLE		N/A	N/A	N/A	N/A
KEY A, BLACK, W/O CPA	33472-1869	A-BLK	GC	PLR		M	R				4	5	6	7	8				12	13	14	15	16	SALEABLE		N/A	N/A	N/A	N/A
KEY A, BLACK, W/O CPA	33472-1870	A-BLK	GC	PLR		M	R	1	2	3	4					9	10	11		13				SALEABLE		N/A	N/A	N/A	N/A
KEY A, BLACK, W/O CPA	33472-1871	A-BLK	GC	PLR		M	R	1	2			5	6	7	8	9	10	11	12	13	14		16	SALEABLE		N/A	N/A	N/A	N/A

molex

MX150 RECEPTACLE 2X8 SEALED ASSEMBLY MAT SEAL
BOM AND PIN OUT SHEET

ASSEMBLY DESCRIPTION	ASSEMBLY PART NUMBER	COMPONENT						BLOCKED TERMINALS																STATUS	COMMENTS	OPTIONAL ATTATCHMENTS SOLD SEPERATELY			
		THE PRESENCE OF AN ABBREVIATION INDICATES THE PRESENCE OF THAT COMPONENT.						CAVITY WITH A NUMBER INDICATES BLOCKED TERMINAL POSITION CAVITY WITHOUT A NUMBER INDICATES OPEN TERMINAL POSITION																					
		HOUSING KEY/COLOR	GROMMET CAP	PLR	CPA	MAT SEAL	RING SEAL	1	2	3	4	5	6	7	8	9	10	11	12	13	14	15	16			BACKSHELL WITH RIBS	BACKSHELL WITHOUT RIBS	90˚ ADAPTOR WITH RIBS	90˚ ADAPTOR WITHOUT RIBS
KEY A, BLACK, W/O CPA	33472-1872	A-BLK	GC	PLR		M	R	1	2			5	6	7	8	9	10						16	SALEABLE		N/A	N/A	N/A	N/A
KEY A, BLACK, W/O CPA	33472-1873	A-BLK	GC	PLR		M	R					5	6	7		9		11	12	13	14		16	SALEABLE		N/A	N/A	N/A	N/A
KEY A, BLACK, W/O CPA	33472-1874	A-BLK	GC	PLR		M	R					5	6	7		9							16	SALEABLE		N/A	N/A	N/A	N/A
KEY A, BLACK, W/O CPA	33472-1875	A-BLK	GC	PLR		M	R	1	2						8		10	11	12	13	14		16	SALEABLE		N/A	N/A	N/A	N/A
KEY A, BLACK, W/O CPA	33472-1876	A-BLK	GC	PLR		M	R											11	12	13	14		16	SALEABLE		N/A	N/A	N/A	N/A
KEY A, BLACK, W/O CPA	33472-1877	A-BLK	GC	PLR		M	R	1	2						8		10						16	SALEABLE		N/A	N/A	N/A	N/A
KEY A, BLACK, W/O CPA	33472-1878	A-BLK	GC	PLR		M	R			3		5		7			10	11		13		15		SALEABLE		N/A	N/A	N/A	N/A
KEY A, BLACK, W/O CPA	33472-1879	A-BLK	GC	PLR		M	R	1	2	3	4	5			8	9	10	11	12	13	14		16	SALEABLE		N/A	N/A	N/A	N/A
KEY A, BLACK, W/O CPA	33472-1880	A-BLK	GC	PLR		M	R												12	13	14			SALEABLE		N/A	N/A	N/A	N/A
KEY A, BLACK, W/O CPA	33472-1881	A-BLK	GC	PLR		M	R		2							9			12	13	14			SALEABLE		N/A	N/A	N/A	N/A
KEY A, BLACK, W/O CPA	33472-1882	A-BLK	GC	PLR		M	R	1			4	5	6		8				12	13	14		16	SALEABLE		N/A	N/A	N/A	N/A
KEY A, BLACK, W/O CPA	33472-1883	A-BLK	GC	PLR		M	R	1	2		4	5	6		8	9	10		12	13	14	15	16	SALEABLE		N/A	N/A	N/A	N/A
KEY A, BLACK, W/O CPA	33472-1884	A-BLK	GC	PLR		M	R				4	5			8		10	11	12	13	14	15		SALEABLE		N/A	N/A	N/A	N/A
KEY A, BLACK, W/O CPA	33472-1885	A-BLK	GC	PLR		M	R							7	8	9	10	11	12	13	14			SALEABLE		N/A	N/A	N/A	N/A
KEY A, YELLOW, W/CPA	33472-1886	A-YW	GC	PLR	CPA	M	R																	SALEABLE		N/A	N/A	N/A	N/A
KEY A, BLACK, W/O CPA	33472-1887	A-BLK	GC	PLR		M	R	1			4	5						11		13	14	15		SALEABLE		N/A	N/A	N/A	N/A
KEY A, BLACK, W/CPA	33472-1888	A-BLK	GC	PLR	CPA	M	R						6			9						15	16	SALEABLE		N/A	N/A	N/A	N/A
KEY A, BLACK, W/O CPA	33472-1889	A-BLK	GC	PLR		M	R													13	14			SALEABLE		N/A	N/A	N/A	N/A
KEY A, BLACK, W/CPA	33472-1890	A-BLK	GC	PLR	CPA	M	R					5			8									SALEABLE		N/A	N/A	N/A	N/A
KEY A, BLACK, W/CPA	33472-1891	A-BLK	GC	PLR	CPA	M	R					5	6	7	8	9	10	11	12					SALEABLE		N/A	N/A	N/A	N/A
KEY A, BLACK, W/O CPA	33472-1894	A-BLK	GC	PLR		M	R					5	6	7	8				12	13	14	15	16	SALEABLE		N/A	N/A	N/A	N/A
KEY A, BLACK, W/O CPA	33472-1895	A-BLK	GC	PLR		M	R	1	2	3						9	10	11		13				SALEABLE		N/A	N/A	N/A	N/A
KEY A, BLACK, W/O CPA	33472-1896	A-BLK	GC	PLR		M	R	1	2			5												SALEABLE		N/A	N/A	N/A	N/A
KEY A, BLACK, W/O CPA	33472-1897	A-BLK	GC	PLR		M	R					5								13	14			SALEABLE		N/A	N/A	N/A	N/A
KEY A, BLACK, W/O CPA	33472-1898	A-BLK	GC	PLR		M	R	1	2			5								13	14			SALEABLE		N/A	N/A	N/A	N/A
KEY A, BLACK, W/O CPA	33472-1899	A-BLK	GC	PLR		M	R					5		7	8	9	10	11	12	13	14			SALEABLE		N/A	N/A	N/A	N/A
KEY A, BLACK, W/O CPA	33472-1900	A-BLK	GC	PLR		M	R	1	2			5		7	8	9	10	11	12	13	14			SALEABLE		N/A	N/A	N/A	N/A
KEY A, BLACK, W/O CPA	33472-1901	A-BLK	GC	PLR		M	R								8		10	11						SALEABLE		N/A	N/A	N/A	N/A
KEY A, BLACK, W/O CPA	33472-1902	A-BLK	GC	PLR		M	R			3														SALEABLE		N/A	N/A	N/A	N/A
KEY A, BLACK, W/O CPA	33472-1903	A-BLK	GC	PLR		M	R			3				7	8	9	10	11	12	13	14			SALEABLE		N/A	N/A	N/A	N/A
KEY A, BLACK, W/O CPA	33472-1904	A-BLK	GC	PLR		M	R		2						8		10	11			14			SALEABLE		N/A	N/A	N/A	N/A
KEY A, BLACK, W/O CPA	33472-1905	A-BLK	GC	PLR		M	R	1				5			8		10	11		13		15		SALEABLE		N/A	N/A	N/A	N/A
KEY A, BLACK, W/O CPA	33472-1906	A-BLK	GC	PLR		M	R										10			13	14	15	16	SALEABLE		N/A	N/A	N/A	N/A
KEY A, BLACK, W/O CPA	33472-1907	A-BLK	GC	PLR		M	R	1			4	5	6		8				12	13	14			SALEABLE		N/A	N/A	N/A	N/A
KEY A, BLACK, W/CPA	33472-1908	A-BLK	GC	PLR	CPA	M	R											11	12	13	14			SALEABLE		N/A	N/A	N/A	N/A
KEY A, BLACK, W/CPA	33472-1909	A-BLK	GC	PLR	CPA	M	R	1		3		5	6						12	13				SALEABLE		N/A	N/A	N/A	N/A
KEY A, BLACK, W/CPA	33472-1910	A-BLK	GC	PLR	CPA	M	R							7	8	9							16	SALEABLE		N/A	N/A	N/A	N/A
KEY A, BLACK, W/O CPA	33472-1911	A-BLK	GC	PLR		M	R			3				7	8	9	10	11	12	13	14	15	16	SALEABLE		N/A	N/A	N/A	N/A
KEY A, BLACK, W/O CPA	33472-1912	A-BLK	GC	PLR		M	R			3												15	16	SALEABLE		N/A	N/A	N/A	N/A
KEY A, BLACK, W/O CPA	33472-1913	A-BLK	GC	PLR		M	R							7	8	9	10	11	12	13	14		16	SALEABLE		N/A	N/A	N/A	N/A
KEY A, BLACK, W/O CPA	33472-1914	A-BLK	GC	PLR		M	R													13	14		16	SALEABLE		N/A	N/A	N/A	N/A
KEY A, BLACK, W/CPA	33472-1915	A-BLK	GC	PLR	CPA	M	R	1	2	3	4	5	6	7	8	9	10	11	12	13	14	15	16	SALEABLE		N/A	N/A	N/A	N/A
KEY A, BLACK, W/O CPA	33472-1916	A-BLK	GC	PLR		M	R	1				5						11		13		15		SALEABLE		N/A	N/A	N/A	N/A
KEY A, BLACK, W/O CPA	33472-1917	A-BLK	GC	PLR		M	R										10							SALEABLE		N/A	N/A	N/A	N/A
KEY A, BLACK, W/O CPA	33472-1918	A-BLK	GC	PLR		M	R														14			SALEABLE		N/A	N/A	N/A	N/A
KEY A, BLACK, W/CPA	33472-1919	A-BLK	GC	PLR	CPA	M	R	1	2			5			8						14	15		SALEABLE		N/A	N/A	N/A	N/A
KEY A, BLACK, W/CPA	33472-1920	A-BLK	GC	PLR	CPA	M	R	1	2			5	6	7	8	9	10	11	12		14	15		SALEABLE		N/A	N/A	N/A	N/A
KEY A, BLACK, W/O CPA	33472-1921	A-BLK	GC	PLR		M	R			3										13	14			SALEABLE		N/A	N/A	N/A	N/A
KEY A, BLACK, W/O CPA	33472-1922	A-BLK	GC	PLR		M	R	1	2	3	4	5	6	7	8	9			12	13		15	16	SALEABLE		N/A	N/A	N/A	N/A
KEY A, BLACK, W/O CPA	33472-1923	A-BLK	GC	PLR		M	R	1	2		4	5		7	8	9						15	16	SALEABLE		N/A	N/A	N/A	N/A
KEY A, BLACK, W/O CPA	33472-1924	A-BLK	GC	PLR		M	R								8								16	SALEABLE		N/A	N/A	N/A	N/A
KEY A, BLACK, W/O CPA	33472-1925	A-BLK	GC	PLR		M	R			3			6											SALEABLE		N/A	N/A	N/A	N/A
KEY A, BLACK, W/O CPA	33472-1926	A-BLK	GC	PLR		M	R			3			6							13	14			SALEABLE		N/A	N/A	N/A	N/A
KEY A, BLACK, W/O CPA	33472-1927	A-BLK	GC	PLR		M	R			3	4	5	6	7		9						15	16	SALEABLE		N/A	N/A	N/A	N/A
KEY A, BLACK, W/O CPA	33472-1928	A-BLK	GC	PLR		M	R						6	7	8						14	15	16	SALEABLE		N/A	N/A	N/A	N/A
KEY A, BLACK, W/O CPA	33472-1929	A-BLK	GC	PLR		M	R						6	7	8				12	13	14	15	16	SALEABLE		N/A	N/A	N/A	N/A
KEY A, BLACK, W/O CPA	33472-1930	A-BLK	GC	PLR		M	R	1	2	3	4	5				9	10	11	12	13				SALEABLE		N/A	N/A	N/A	N/A
KEY A, BLACK, W/O CPA	33472-1931	A-BLK	GC	PLR		M	R	1													14			SALEABLE		N/A	N/A	N/A	N/A
KEY A, BLACK, W/O CPA	33472-1932	A-BLK	GC	PLR		M	R	1	2		4	5	6				10				14			SALEABLE		N/A	N/A	N/A	N/A
KEY A, BLACK, W/O CPA	33472-1933	A-BLK	GC	PLR		M	R								8		10	11		13		15		SALEABLE		N/A	N/A	N/A	N/A
KEY A, BLACK, W/O CPA	33472-1934	A-BLK	GC	PLR		M	R		2			5			8		10	11			14			SALEABLE		N/A	N/A	N/A	N/A
KEY A, BLACK, W/O CPA	33472-1935	A-BLK	GC	PLR		M	R		2			5			8		10	11		13	14	15		SALEABLE		N/A	N/A	N/A	N/A
KEY A, BLACK, W/CPA	33472-1936	A-BLK	GC	PLR	CPA	M	R		2		4		6				10		12		14	15		SALEABLE		N/A	N/A	N/A	N/A
KEY B, LIGHT GRAY, W/CPA	33472-1937	B-LG	GC	PLR	CPA	M	R		2		4		6				10		12		14	15		SALEABLE		N/A	N/A	N/A	N/A
KEY A, BLACK, W/CPA	33472-1938	A-BLK	GC	PLR	CPA	M	R					5	6	7			10			13				SALEABLE		N/A	N/A	N/A	N/A
KEY A, BLACK, W/CPA	33472-1939	A-BLK	GC	PLR	CPA	M	R	1	2	3		5	6						12	13				SALEABLE		N/A	N/A	N/A	N/A
KEY A, BLACK, W/CPA	33472-1940	A-BLK	GC	PLR	CPA	M	R							7			10							SALEABLE		N/A	N/A	N/A	N/A
KEY A, BLACK, W/CPA	33472-1941	A-BLK	GC	PLR	CPA	M	R				4	5	6	7			10				14	15	16	SALEABLE		N/A	N/A	N/A	N/A
KEY A, BLACK, W/O CPA	33472-1942	A-BLK	GC	PLR		M	R												12	13				SALEABLE		N/A	N/A	N/A	N/A
KEY A, BLACK, W/O CPA	33472-1943	A-BLK	GC	PLR		M	R								8			11	12	13			16	SALEABLE		N/A	N/A	N/A	N/A
KEY A, BLACK, W/O CPA	33472-1944	A-BLK	GC	PLR		M	R								8					13			16	SALEABLE		N/A	N/A	N/A	N/A
KEY A, BLACK, W/O CPA	33472-1945	A-BLK	GC	PLR		M	R				4	5			8		10	11		13	14			SALEABLE		N/A	N/A	N/A	N/A
KEY A, BLACK, W/O CPA	33472-1946	A-BLK	GC	PLR		M	R	1											12		14			SALEABLE		N/A	N/A	N/A	N/A
KEY A, BLACK, W/O CPA	33472-1947	A-BLK	GC	PLR		M	R					5			8		10	11		13				SALEABLE		N/A	N/A	N/A	N/A
KEY A, BLACK, W/O CPA	33472-1948	A-BLK	GC	PLR		M	R				4				8					13	14	15	16	SALEABLE		N/A	N/A	N/A	N/A
KEY A, BLACK, W/CPA	33472-1949	A-BLK	GC	PLR	CPA	M	R						6	7	8			11	12	13	14	15		SALEABLE		N/A	N/A	N/A	N/A
KEY A, BLACK, W/O CPA	33472-1950	A-BLK	GC	PLR		M	R					5	6	7	8									SALEABLE		N/A	N/A	N/A	N/A
KEY A, BLACK, W/CPA	33472-1951	A-BLK	GC	PLR	CPA	M	R											11	12		14	15	16	SALEABLE		N/A	N/A	N/A	N/A
KEY A, BLACK, W/O CPA	33472-1952	A-BLK	GC	PLR		M	R					5	6	7	8			11	12	13	14	15		SALEABLE		N/A	N/A	N/A	N/A
KEY A, BLACK, W/CPA	33472-1953	A-BLK	GC	PLR	CPA	M	R						6	7	8		10	11	12	13	14	15		SALEABLE		N/A	N/A	N/A	N/A
KEY A, BLACK, W/CPA	33472-1954	A-BLK	GC	PLR	CPA	M	R					5	6	7	8			11	12	13	14	15		SALEABLE		N/A	N/A	N/A	N/A
KEY A, BLACK, W/CPA	33472-1955	A-BLK	GC	PLR	CPA	M	R					5	6	7	8									SALEABLE		N/A	N/A	N/A	N/A
KEY B, LIGHT GRAY, W/O CPA	33472-1956	B-LG	GC	PLR		M	R			3														SALEABLE		N/A	N/A	N/A	N/A
KEY A, BLACK, W/O CPA	33472-1957	A-BLK	GC	PLR		M	R	1	2	3	4	5	6	7	8				12	13	14	15	16	SALEABLE		N/A	N/A	N/A	N/A
KEY A, BLACK, W/O CPA	33472-1958	A-BLK	GC	PLR		M	R							7	8						14	15	16	SALEABLE		N/A	N/A	N/A	N/A
KEY A, BLACK, W/O CPA	33472-1959	A-BLK	GC	PLR		M	R										10	11	12	13	14			SALEABLE		N/A	N/A	N/A	N/A
KEY A, BLACK, W/O CPA	33472-1960	A-BLK	GC	PLR		M	R				4		6		8					13	14	15	16	SALEABLE		N/A	N/A	N/A	N/A
KEY A, BLACK, W/O CPA	33472-1961	A-BLK	GC	PLR		M	R			3			6	7	8	9	10	11	12	13	14			SALEABLE		N/A	N/A	N/A	N/A
KEY B, LIGHT GRAY, W/O CPA	33472-1962	B-LG	GC	PLR		M	R													13				SALEABLE		N/A	N/A	N/A	N/A
KEY A, BLACK, W/O CPA	33472-1963	A-BLK	GC	PLR		M	R					5		7	8			11		13		15		SALEABLE		N/A	N/A	N/A	N/A
KEY A, BLACK, W/O CPA	33472-1964	A-BLK	GC	PLR		M	R													13				SALEABLE		N/A	N/A	N/A	N/A
KEY A, BLACK, W/CPA	33472-1965	A-BLK	GC	PLR	CPA	M	R					5	6						12	13		15		SALEABLE		N/A	N/A	N/A	N/A
KEY A, BLACK, W/CPA	33472-1966	A-BLK	GC	PLR	CPA	M	R						6	7	8		10	11						SALEABLE		N/A	N/A	N/A	N/A
KEY A, BLACK, W/CPA	33472-1967	A-BLK	GC	PLR	CPA	M	R						6	7	8									SALEABLE		N/A	N/A	N/A	N/A
KEY A, BLACK, W/O CPA	33472-1968	A-BLK	GC	PLR		M	R	1	2						8	9		11		13		15	16	SALEABLE		N/A	N/A	N/A	N/A
KEY A, BLACK, W/CPA	33472-1969	A-BLK	GC	PLR	CPA	M	R											11	12	13	14	15		SALEABLE		N/A	N/A	N/A	N/A
KEY A, BLACK, W/O CPA	33472-1970	A-BLK	GC	PLR		M	R				4	5			8					13	14	15	16	SALEABLE		N/A	N/A	N/A	N/A
KEY A, BLACK, W/O CPA	33472-1971	A-BLK	GC	PLR		M	R	1	2	3	4	5	6	7	8									SALEABLE		N/A	N/A	N/A	N/A
KEY A, BLACK, W/O CPA	33472-1972	A-BLK	GC	PLR		M	R		2						8		10	11				15	16	SALEABLE		N/A	N/A	N/A	N/A

molex

MX150 RECEPTACLE 2X8 SEALED ASSEMBLY MAT SEAL
BOM AND PIN OUT SHEET

ASSEMBLY DESCRIPTION	ASSEMBLY PART NUMBER	COMPONENT						BLOCKED TERMINALS																STATUS	COMMENTS	OPTIONAL ATTATCHMENTS SOLD SEPERATELY			
		THE PRESENCE OF AN ABBREVIATION INDICATES THE PRESENCE OF THAT COMPONENT.						CAVITY WITH A NUMBER INDICATES BLOCKED TERMINAL POSITION CAVITY WITHOUT A NUMBER INDICATES OPEN TERMINAL POSITION																					
		HOUSING KEY/COLOR	GROMMET CAP	PLR	CPA	MAT SEAL	RING SEAL	1	2	3	4	5	6	7	8	9	10	11	12	13	14	15	16			BACKSHELL WITH RIBS	BACKSHELL WITHOUT RIBS	90˚ ADAPTOR WITH RIBS	90˚ ADAPTOR WITHOUT RIBS
KEY A, BLACK, W/O CPA	33472-1973	A-BLK	GC	PLR		M	R	1	2	3	4	5	6	7	8	9			12	13	14			SALEABLE		N/A	N/A	N/A	N/A
KEY A, BLACK, W/O CPA	33472-1974	A-BLK	GC	PLR		M	R		2						8	9			12	13	14			SALEABLE		N/A	N/A	N/A	N/A
KEY A, BLACK, W/O CPA	33472-1975	A-BLK	GC	PLR		M	R									9			12	13	14			SALEABLE		N/A	N/A	N/A	N/A
KEY A, BLACK, W/O CPA	33472-1976	A-BLK	GC	PLR		M	R		2						8	9	10	11	12	13	14	15	16	SALEABLE		N/A	N/A	N/A	N/A
KEY A, BLACK, W/O CPA	33472-1977	A-BLK	GC	PLR		M	R									9								SALEABLE		N/A	N/A	N/A	N/A
KEY A, BLACK, W/O CPA	33472-1978	A-BLK	GC	PLR		M	R															15		SALEABLE		N/A	N/A	N/A	N/A
KEY A, BLACK, W/O CPA	33472-1979	A-BLK	GC	PLR		M	R											11	12			15		SALEABLE		N/A	N/A	N/A	N/A
KEY A, BLACK, W/O CPA	33472-1980	A-BLK	GC	PLR		M	R	1			4		6	7	8		10	11	12	13	14	15		SALEABLE		N/A	N/A	N/A	N/A
KEY A, BLACK, W/O CPA	33472-1981	A-BLK	GC	PLR		M	R			3	4	5					10							SALEABLE		N/A	N/A	N/A	N/A
KEY A, BLACK, W/O CPA	33472-1982	A-BLK	GC	PLR		M	R										10	11				15		SALEABLE		N/A	N/A	N/A	N/A
KEY A, BLACK, W/O CPA	33472-1983	A-BLK	GC	PLR		M	R	1							8		10	11				15		SALEABLE		N/A	N/A	N/A	N/A
KEY A, BLACK, W/O CPA	33472-1984	A-BLK	GC	PLR		M	R	1	2	3	4	5	6	7	8		10	11				15		SALEABLE		N/A	N/A	N/A	N/A
KEY A, BLACK, W/O CPA	33472-1985	A-BLK	GC	PLR		M	R	1							8	9	10	11				15	16	SALEABLE		N/A	N/A	N/A	N/A
KEY A, BLACK, W/O CPA	33472-1986	A-BLK	GC	PLR		M	R									9	10	11				15	16	SALEABLE		N/A	N/A	N/A	N/A
KEY A, BLACK, W/O CPA	33472-1987	A-BLK	GC	PLR		M	R	1	2	3		5	6	7		9		11		13	14	15	16	SALEABLE		N/A	N/A	N/A	N/A
KEY A, BLACK, W/O CPA	33472-1988	A-BLK	GC	PLR		M	R		2				6	7		9	10	11		13	14	15	16	SALEABLE		N/A	N/A	N/A	N/A
KEY A, BLACK, W/O CPA	33472-1989	A-BLK	GC	PLR		M	R													13			16	SALEABLE		N/A	N/A	N/A	N/A
KEY A, BLACK, W/O CPA	33472-1990	A-BLK	GC	PLR		M	R											11	12	13			16	SALEABLE		N/A	N/A	N/A	N/A
KEY A, BLACK, W/O CPA	33472-1991	A-BLK	GC	PLR		M	R	1																SALEABLE		N/A	N/A	N/A	N/A
KEY A, BLACK, W/O CPA	33472-1992	A-BLK	GC	PLR		M	R						6					11	12	13	14			SALEABLE		N/A	N/A	N/A	N/A
KEY A, BLACK, W/O CPA	33472-1993	A-BLK	GC	PLR		M	R			3	4	5	6	7		9							16	SALEABLE		N/A	N/A	N/A	N/A
KEY A, BLACK, W/O CPA	33472-1994	A-BLK	GC	PLR		M	R		2		4	5	6			9	10		12	13	14		16	SALEABLE		N/A	N/A	N/A	N/A
KEY A, BLACK, W/O CPA	33472-1995	A-BLK	GC	PLR		M	R		2		4	5	6	7		9	10		12	13	14		16	SALEABLE		N/A	N/A	N/A	N/A
KEY A, BLACK, W/O CPA	33472-1996	A-BLK	GC	PLR		M	R	1	2				6	7	8	9	10				14	15	16	SALEABLE		N/A	N/A	N/A	N/A
KEY A, BLACK, W/O CPA	33472-1997	A-BLK	GC	PLR		M	R	1	2					7	8	9	10					15	16	SALEABLE		N/A	N/A	N/A	N/A
KEY A, BLACK, W/O CPA	33472-1998	A-BLK	GC	PLR		M	R			3	4	5	6	7	8			11	12	13	14	15	16	SALEABLE		N/A	N/A	N/A	N/A
KEY A, BLACK, W/O CPA	33472-1999	A-BLK	GC	PLR		M	R							7	8							15	16	SALEABLE		N/A	N/A	N/A	N/A
KEY A, BLACK, W/CPA	33472-8001	A-BLK	GC	PLR	CPA	M	R	1	2	3	4	5	6				10	11	12	13	14	15	16	SALEABLE		N/A	N/A	N/A	N/A
KEY A, BLACK, W/CPA	33472-8002	A-BLK	GC	PLR	CPA	M	R										10			13	14	15	16	SALEABLE		N/A	N/A	N/A	N/A
KEY A, BLACK, W/CPA	33472-8003	A-BLK	GC	PLR	CPA	M	R	1	2	3	4	5	6					11	12					SALEABLE		N/A	N/A	N/A	N/A
KEY A, BLACK, W/O CPA	33472-8004	A-BLK	GC	PLR		M	R		2			5		7		9		11					16	SALEABLE		N/A	N/A	N/A	N/A
KEY A, BLACK, W/O CPA	33472-8005	A-BLK	GC	PLR		M	R	1	2	3	4	5	6	7	8			11					16	SALEABLE		N/A	N/A	N/A	N/A
KEY A, BLACK, W/O CPA	33472-8006	A-BLK	GC	PLR		M	R	1			4	5	6	7	8			11						SALEABLE		N/A	N/A	N/A	N/A
KEY A, BLACK, W/O CPA	33472-8007	A-BLK	GC	PLR		M	R	1			4	5	6	7										SALEABLE		N/A	N/A	N/A	N/A
KEY A, BLACK, W/CPA	33472-8008	A-BLK	GC	PLR	CPA	M	R	1	2	3	4	5	6						12	13				SALEABLE		N/A	N/A	N/A	N/A
KEY A, BLACK, W/CPA	33472-8009	A-BLK	GC	PLR	CPA	M	R							7	8						14	15	16	SALEABLE		N/A	N/A	N/A	N/A
KEY A, BLACK, W/CPA	33472-8010	A-BLK	GC	PLR	CPA	M	R	1	2	3	4	5	6	7	8				12	13	14	15	16	SALEABLE		N/A	N/A	N/A	N/A
KEY A, BLACK, W/CPA	33472-8011	A-BLK	GC	PLR	CPA	M	R				4					9			12					SALEABLE		N/A	N/A	N/A	N/A
KEY A, BLACK, W/CPA	33472-8012	A-BLK	GC	PLR	CPA	M	R				4					9	10		12					SALEABLE		N/A	N/A	N/A	N/A
KEY A, BLACK, W/CPA	33472-8013	A-BLK	GC	PLR	CPA	M	R	1	2		4		6	7	8	9			12					SALEABLE		N/A	N/A	N/A	N/A
KEY A, BLACK, W/CPA	33472-8014	A-BLK	GC	PLR	CPA	M	R			3	4					9	10			13	14			SALEABLE		N/A	N/A	N/A	N/A
KEY A, BLACK, W/O CPA	33472-8015	A-BLK	GC	PLR		M	R	1							8			11						SALEABLE		N/A	N/A	N/A	N/A
KEY A, BLACK, W/O CPA	33472-8016	A-BLK	GC	PLR		M	R										10	11	12	13			16	SALEABLE		N/A	N/A	N/A	N/A
KEY A, BLACK, W/O CPA	33472-8017	A-BLK	GC	PLR		M	R	1	2		4	5	6	7	8		10				14	15	16	SALEABLE		N/A	N/A	N/A	N/A
KEY A, BLACK, W/O CPA	33472-8018	A-BLK	GC	PLR		M	R	1				5	6				10			13	14			SALEABLE		N/A	N/A	N/A	N/A
KEY A, BLACK, W/O CPA	33472-8019	A-BLK	GC	PLR		M	R				4	5		7	8			11	12	13	14	15		SALEABLE		N/A	N/A	N/A	N/A
KEY A, BLACK, W/O CPA	33472-8020	A-BLK	GC	PLR		M	R							7	8	9					14	15	16	SALEABLE		N/A	N/A	N/A	N/A
KEY A, BLACK, W/CPA	33472-8021	A-BLK	GC	PLR	CPA	M	R																16	SALEABLE		N/A	N/A	N/A	N/A
KEY A, BLACK, W/CPA	33472-8022	A-BLK	GC	PLR	CPA	M	R										10	11	12	13	14	15	16	SALEABLE		N/A	N/A	N/A	N/A
KEY A, BLACK, W/CPA	33472-8023	A-BLK	GC	PLR	CPA	M	R										10	11	12	13			16	SALEABLE		N/A	N/A	N/A	N/A
KEY A, BLACK, W/CPA	33472-8024	A-BLK	GC	PLR	CPA	M	R														14	15	16	SALEABLE		N/A	N/A	N/A	N/A
KEY A, BLACK, W/CPA	33472-8025	A-BLK	GC	PLR	CPA	M	R							7	8	9	10	11	12	13	14	15	16	SALEABLE		N/A	N/A	N/A	N/A
KEY A, BLACK, W/CPA	33472-8026	A-BLK	GC	PLR	CPA	M	R											11	12	13	14	15	16	SALEABLE		N/A	N/A	N/A	N/A
KEY A, BLACK, W/CPA	33472-8027	A-BLK	GC	PLR	CPA	M	R													13	14	15	16	SALEABLE		N/A	N/A	N/A	N/A
KEY A, BLACK, W/CPA	33472-8028	A-BLK	GC	PLR	CPA	M	R	1	2	3	4	5	6					11	12	13	14	15	16	SALEABLE		N/A	N/A	N/A	N/A
KEY A, BLACK, W/O CPA	33472-8029	A-BLK	GC	PLR		M	R	1	2		4		6	7	8			11	12					SALEABLE		N/A	N/A	N/A	N/A
KEY A, BLACK, W/O CPA	33472-8030	A-BLK	GC	PLR		M	R		2		4		6	7	8				12				16	SALEABLE		N/A	N/A	N/A	N/A
KEY A, BLACK, W/O CPA	33472-8031	A-BLK	GC	PLR		M	R			3					8			11	12	13	14	15	16	SALEABLE		N/A	N/A	N/A	N/A
KEY A, BLACK, W/O CPA	33472-8032	A-BLK	GC	PLR		M	R	1	2	3	4	5	6	7	8		10	11	12	13	14	15		SALEABLE		N/A	N/A	N/A	N/A
KEY A, BLACK, W/CPA	33472-8033	A-BLK	GC	PLR	CPA	M	R							7	8	9	10			13	14	15	16	SALEABLE		N/A	N/A	N/A	N/A
KEY A, BLACK, W/O CPA	33472-8034	A-BLK	GC	PLR		M	R	1	2	3	4	5	6	7	8	9	10	11				15	16	SALEABLE		N/A	N/A	N/A	N/A
KEY A, BLACK, W/O CPA	33472-8035	A-BLK	GC	PLR		M	R			3		5			8		10	11			14			SALEABLE		N/A	N/A	N/A	N/A
KEY A, BLACK, W/O CPA	33472-8036	A-BLK	GC	PLR		M	R										10	11		13			16	SALEABLE		N/A	N/A	N/A	N/A
KEY A, BLACK, W/CPA	33472-8037	A-BLK	GC	PLR	CPA	M	R							7									16	SALEABLE		N/A	N/A	N/A	N/A
KEY A, BLACK, W/O CPA	33472-8038	A-BLK	GC	PLR		M	R		2					7		9	10	11	12	13	14		16	SALEABLE		N/A	N/A	N/A	N/A
KEY A, BLACK, W/O CPA	33472-8039	A-BLK	GC	PLR		M	R	1	2					7	8	9	10	11	12	13	14		16	SALEABLE		N/A	N/A	N/A	N/A
KEY A, BLACK, W/O CPA	33472-8040	A-BLK	GC	PLR		M	R		2					7	8					13	14	15	16	SALEABLE		N/A	N/A	N/A	N/A
KEY B, LIGHT GRAY, W/O CPA	33472-8041	B-LG	GC	PLR		M	R					5								13	14	15	16	SALEABLE		N/A	N/A	N/A	N/A
KEY A, BLACK, WITH CLIPSLOT, W/O CPA	33472-3001	A-BLK-CLIP	GC	PLR		M	R																	SALEABLE		34951-1611	34951-1621	34951-1631	34951-1641
KEY B, LIGHT GRAY, WITH CLIPSLOT, W/O CPA	33472-3002	B-LG-CLIP	GC	PLR		M	R																	SALEABLE		34951-1611	34951-1621	34951-1631	34951-1641
KEY C, DARK GRAY, WITH CLIPSLOT, W/O CPA	33472-3003	C-DG-CLIP	GC	PLR		M	R																	SALEABLE		34951-1611	34951-1621	34951-1631	34951-1641
KEY D, STONE GRAY, WITH CLIPSLOT, W/O CPA	33472-3004	D-SG-CLIP	GC	PLR		M	R																	SALEABLE		34951-1611	34951-1621	34951-1631	34951-1641
KEY A, BLACK, WITH CLIPSLOT, W/CPA	33472-3005	A-BLK-CLIP	GC	PLR	CPA	M	R																	SALEABLE		34951-1611	34951-1621	34951-1631	34951-1641
KEY B, LIGHT GRAY, WITH CLIPSLOT, W/CPA	33472-3006	B-LG-CLIP	GC	PLR	CPA	M	R																	SALEABLE		34951-1611	34951-1621	34951-1631	34951-1641
KEY C, DARK GRAY, WITH CLIPSLOT, W/CPA	33472-3007	C-DG-CLIP	GC	PLR	CPA	M	R																	SALEABLE		34951-1611	34951-1621	34951-1631	34951-1641
KEY D, STONE GRAY, WITH CLIPSLOT, W/CPA	33472-3008	D-SG-CLIP	GC	PLR	CPA	M	R																	SALEABLE		34951-1611	34951-1621	34951-1631	34951-1641
KEY A, BLACK, WITH CLIPSLOT, W/O CPA	33472-3009	A-BLK-CLIP	GC	PLR		M	R														14	15	16	SALEABLE		34951-1611	34951-1621	34951-1631	34951-1641
KEY A, BLACK, WITH CLIPSLOT, W/O CPA	33472-3010	A-BLK-CLIP	GC	PLR		M	R			3	4			7	8	9						15	16	SALEABLE		34951-1611	34951-1621	34951-1631	34951-1641
KEY A, BLACK, WITH CLIPSLOT, W/CPA	33472-3011	A-BLK-CLIP	GC	PLR	CPA	M	R			3	4										14	15	16	SALEABLE		34951-1611	34951-1621	34951-1631	34951-1641
KEY A, BLACK, WITH CLIPSLOT, W/O CPA	33472-3012	A-BLK-CLIP	GC	PLR		M	R	1				5			8	9	10						16	SALEABLE		34951-1611	34951-1621	34951-1631	34951-1641
KEY A, BLACK, W/O CPA	33472-8042	A-BLK	GC	PLR		M	R					5				9	10	11	12	13	14	15	16	SALEABLE		N/A	N/A	N/A	N/A
KEY A, BLACK, W/O CPA	33472-8043	A-BLK	GC	PLR		M	R										10	11	12	13	14		16	SALEABLE		N/A	N/A	N/A	N/A
KEY A, BLACK, W/O CPA	33472-8044	A-BLK	GC	PLR		M	R						6	7		9	10			13	14	15		SALEABLE		N/A	N/A	N/A	N/A
KEY A, BLACK, W/O CPA	33472-8045	A-BLK	GC	PLR		M	R	1	2	3	4	5	6	7		9			12	13		15	16	SALEABLE		N/A	N/A	N/A	N/A
KEY A, BLACK, W/O CPA	33472-8046	A-BLK	GC	PLR		M	R	1	2	3				7		9			12	13			16	SALEABLE		N/A	N/A	N/A	N/A
KEY A, BLACK, W/O CPA	33472-8047	A-BLK	GC	PLR		M	R		2			5				9			12	13				SALEABLE		N/A	N/A	N/A	N/A
KEY A, BLACK, W/O CPA	33472-8048	A-BLK	GC	PLR		M	R				4		6	7		9							16	SALEABLE		N/A	N/A	N/A	N/A
KEY A, BLACK, W/O CPA	33472-8049	A-BLK	GC	PLR		M	R				4												16	SALEABLE		N/A	N/A	N/A	N/A
KEY A, BLACK, W/O CPA	33472-8050	A-BLK	GC	PLR		M	R				4					9							16	SALEABLE		N/A	N/A	N/A	N/A
KEY A, BLACK, W/O CPA	33472-8051	A-BLK	GC	PLR		M	R							7		9	10			13	14	15	16	SALEABLE		N/A	N/A	N/A	N/A
KEY A, BLACK, W/O CPA	33472-8052	A-BLK	GC	PLR		M	R							7		9	10			13		15	16	SALEABLE		N/A	N/A	N/A	N/A
KEY A, BLACK, W/O CPA	33472-8053	A-BLK	GC	PLR		M	R							7		9	10	11		13	14	15	16	SALEABLE		N/A	N/A	N/A	N/A
KEY A, BLACK, W/CPA	33472-8054	A-BLK	GC	PLR	CPA	M	R							7	8	9		11	12		14	15	16	SALEABLE		N/A	N/A	N/A	N/A
KEY A, BLACK, W/CPA	33472-8055	A-BLK	GC	PLR	CPA	M	R	1	2															SALEABLE		N/A	N/A	N/A	N/A
KEY B, LIGHT GRAY, W/CPA	33472-8056	B-LG	GC	PLR	CPA	M	R							7	8						14	15	16	SALEABLE		N/A	N/A	N/A	N/A
KEY A, BLACK, W/CPA	33472-8057	A-BLK	GC	PLR	CPA	M	R				4					9								SALEABLE		N/A	N/A	N/A	N/A
KEY A, BLACK, W/O CPA	33472-8058	A-BLK	GC	PLR		M	R	1	2	3			6	7	8		10	11			14		16	SALEABLE		N/A	N/A	N/A	N/A
KEY A, BLACK, W/O CPA	33472-8059	A-BLK	GC	PLR		M	R		2	3			6	7			10	11			14			SALEABLE		N/A	N/A	N/A	N/A
KEY A, BLACK, W/O CPA	33472-8060	A-BLK	GC	PLR		M	R		2				6	7			10				14			SALEABLE		N/A	N/A	N/A	N/A

molex

MX150 RECEPTACLE 2X8 SEALED ASSEMBLY MAT SEAL
BOM AND PIN OUT SHEET

ASSEMBLY DESCRIPTION	ASSEMBLY PART NUMBER	COMPONENT						BLOCKED TERMINALS																STATUS	COMMENTS	OPTIONAL ATTATCHMENTS SOLD SEPERATELY			
		THE PRESENCE OF AN ABBREVIATION INDICATES THE PRESENCE OF THAT COMPONENT.						CAVITY WITH A NUMBER INDICATES BLOCKED TERMINAL POSITION CAVITY WITHOUT A NUMBER INDICATES OPEN TERMINAL POSITION																					
		HOUSING KEY/COLOR	GROMMET CAP	PLR	CPA	MAT SEAL	RING SEAL	1	2	3	4	5	6	7	8	9	10	11	12	13	14	15	16			BACKSHELL WITH RIBS	BACKSHELL WITHOUT RIBS	90˚ ADAPTOR WITH RIBS	90˚ ADAPTOR WITHOUT RIBS
KEY A, BLACK, W/O CPA	33472-8061	A-BLK	GC	PLR		M	R	1	2				6	7			10				14		16	SALEABLE		N/A	N/A	N/A	N/A
KEY A, BLACK, W/O CPA	33472-8062	A-BLK	GC	PLR		M	R						6		8							15	16	SALEABLE		N/A	N/A	N/A	N/A
KEY A, BLACK, W/O CPA	33472-8063	A-BLK	GC	PLR		M	R								8	9						15	16	SALEABLE		N/A	N/A	N/A	N/A
KEY A, BLACK, W/O CPA	33472-8064	A-BLK	GC	PLR		M	R				4				8	9	10			13	14	15	16	SALEABLE		N/A	N/A	N/A	N/A
KEY A, BLACK, W/O CPA	33472-8065	A-BLK	GC	PLR		M	R				4				8	9	10					15	16	SALEABLE		N/A	N/A	N/A	N/A
KEY A, BLACK, W/O CPA	33472-8066	A-BLK	GC	PLR		M	R				4		6		8			11		13		15	16	SALEABLE		N/A	N/A	N/A	N/A
KEY A, BLACK, W/O CPA	33472-8067	A-BLK	GC	PLR		M	R								8			11		13			16	SALEABLE		N/A	N/A	N/A	N/A
KEY A, BLACK, W/O CPA	33472-8068	A-BLK	GC	PLR		M	R					5			8		10	11			14	15		SALEABLE		N/A	N/A	N/A	N/A
KEY A, BLACK, W/O CPA	33472-8069	A-BLK	GC	PLR		M	R			3			6			9		11			14			SALEABLE		N/A	N/A	N/A	N/A
KEY A, BLACK, W/O CPA	33472-8070	A-BLK	GC	PLR		M	R			3									12	13				SALEABLE		N/A	N/A	N/A	N/A
KEY A, BLACK, W/O CPA	33472-8071	A-BLK	GC	PLR		M	R															15	16	SALEABLE		N/A	N/A	N/A	N/A
KEY A, BLACK, W/O CPA	33472-8072	A-BLK	GC	PLR		M	R				4													SALEABLE		N/A	N/A	N/A	N/A
KEY A, BLACK, W/O CPA	33472-8073	A-BLK	GC	PLR		M	R			3						9								SALEABLE		N/A	N/A	N/A	N/A
KEY A, BLACK, W/O CPA	33472-8074	A-BLK	GC	PLR		M	R											11						SALEABLE		N/A	N/A	N/A	N/A
KEY A, BLACK, W/O CPA	33472-8075	A-BLK	GC	PLR		M	R									9					14			SALEABLE		N/A	N/A	N/A	N/A
KEY A, BLACK, W/O CPA	33472-8076	A-BLK	GC	PLR		M	R							7			10	11		13	14	15	16	SALEABLE		N/A	N/A	N/A	N/A
KEY A, BLACK, W/O CPA	33472-8077	A-BLK	GC	PLR		M	R			3							10	11	12	13	14	15	16	SALEABLE		N/A	N/A	N/A	N/A
KEY A, BLACK, W/O CPA	33472-8078	A-BLK	GC	PLR		M	R									9	10	11		13		15	16	SALEABLE		N/A	N/A	N/A	N/A
KEY A, BLACK, W/O CPA	33472-8079	A-BLK	GC	PLR		M	R	1							8	9	10	11		13		15	16	SALEABLE		N/A	N/A	N/A	N/A
KEY A, BLACK, W/O CPA	33472-8080	A-BLK	GC	PLR		M	R	1	2	3	4	5	6	7	8	9	10	11		13		15	16	SALEABLE		N/A	N/A	N/A	N/A
KEY A, BLACK, W/O CPA	33472-8081	A-BLK	GC	PLR		M	R	1					6	7		9	10	11	12	13		15	16	SALEABLE		N/A	N/A	N/A	N/A
KEY A, BLACK, W/O CPA	33472-8082	A-BLK	GC	PLR		M	R	1					6	7		9	10	11	12	13			16	SALEABLE		N/A	N/A	N/A	N/A
KEY A, BLACK, W/O CPA	33472-8083	A-BLK	GC	PLR		M	R			3			6			9	10	11	12	13	14	15	16	SALEABLE		N/A	N/A	N/A	N/A
KEY A, BLACK, W/O CPA	33472-8084	A-BLK	GC	PLR		M	R		2			5					10	11	12	13	14	15	16	SALEABLE		N/A	N/A	N/A	N/A
KEY A, BLACK, W/O CPA	33472-8085	A-BLK	GC	PLR		M	R		2	3		5	6			9	10	11	12	13	14	15	16	SALEABLE		N/A	N/A	N/A	N/A
KEY A, BLACK, W/O CPA	33472-8086	A-BLK	GC	PLR		M	R	1								9		11		13		15	16	SALEABLE		N/A	N/A	N/A	N/A
KEY A, BLACK, W/O CPA	33472-8087	A-BLK	GC	PLR		M	R	1								9		11	12		14	15	16	SALEABLE		N/A	N/A	N/A	N/A
KEY A, BLACK, W/O CPA	33472-8088	A-BLK	GC	PLR		M	R								8	9	10	11	12		14	15	16	SALEABLE		N/A	N/A	N/A	N/A
KEY A, BLACK, W/O CPA	33472-8089	A-BLK	GC	PLR		M	R										10	11	12		14	15		SALEABLE		N/A	N/A	N/A	N/A
KEY A, BLACK, W/O CPA	33472-8090	A-BLK	GC	PLR		M	R									9	10	11	12		14	15		SALEABLE		N/A	N/A	N/A	N/A
KEY A, BLACK, W/O CPA	33472-8091	A-BLK	GC	PLR		M	R												12					SALEABLE		N/A	N/A	N/A	N/A
KEY A, BLACK, W/O CPA	33472-8092	A-BLK	GC	PLR		M	R					5	6						12					SALEABLE		N/A	N/A	N/A	N/A
KEY A, BLACK, W/O CPA	33472-8093	A-BLK	GC	PLR		M	R					5	6	7										SALEABLE		N/A	N/A	N/A	N/A
KEY A, BLACK, W/O CPA	33472-8094	A-BLK	GC	PLR		M	R	1	2	3	4	5	6	7	8		10			13		15		SALEABLE		N/A	N/A	N/A	N/A
KEY A, BLACK, W/O CPA	33472-8095	A-BLK	GC	PLR		M	R						6				10			13	14	15	16	SALEABLE		N/A	N/A	N/A	N/A
KEY A, BLACK, W/O CPA	33472-8096	A-BLK	GC	PLR		M	R					5				9						15	16	SALEABLE		N/A	N/A	N/A	N/A
KEY A, BLACK, W/O CPA	33472-8097	A-BLK	GC	PLR		M	R					5				9			12	13		15	16	SALEABLE		N/A	N/A	N/A	N/A
KEY A, BLACK, W/O CPA	33472-8098	A-BLK	GC	PLR		M	R			3						9			12	13				SALEABLE		N/A	N/A	N/A	N/A
KEY A, BLACK, W/O CPA	33472-8099	A-BLK	GC	PLR		M	R			3		5				9								SALEABLE		N/A	N/A	N/A	N/A
KEY A, BLACK, W/CPA	33472-8100	A-BLK	GC	PLR	CPA	M	R	1	2	3	4	5	6	7	8						14	15		SALEABLE		N/A	N/A	N/A	N/A
KEY A, BLACK, W/O CPA	33472-8101	A-BLK	GC	PLR		M	R	1	2	3	4	5	6	7	8						14	15		SALEABLE		N/A	N/A	N/A	N/A
KEY A, BLACK, W/CPA	33472-8102	A-BLK	GC	PLR	CPA	M	R											11			14			SALEABLE		N/A	N/A	N/A	N/A
KEY A, BLACK, W/O CPA	33472-8103	A-BLK	GC	PLR		M	R	1				5			8	9	10						16	SALEABLE		N/A	N/A	N/A	N/A
KEY A, BLACK, W/CPA	33472-8104	A-BLK	GC	PLR	CPA	M	R		2		4	5			8				12	13	14	15	16	SALEABLE		N/A	N/A	N/A	N/A
KEY A, BLACK, W/CPA	33472-8105	A-BLK	GC	PLR	CPA	M	R								8								16	SALEABLE		N/A	N/A	N/A	N/A
KEY A, BLACK, W/CPA	33472-8106	A-BLK	GC	PLR	CPA	M	R				4	5			8				12	13	14	15	16	SALEABLE		N/A	N/A	N/A	N/A
KEY A, BLACK, W/O CPA	33472-8107	A-BLK	GC	PLR		M	R			3			6					11	12	13	14	15	16	SALEABLE		N/A	N/A	N/A	N/A
KEY A, BLACK, W/O CPA	33472-8108	A-BLK	GC	PLR		M	R			3			6			9		11	12	13	14	15	16	SALEABLE		N/A	N/A	N/A	N/A
KEY A, BLACK, W/O CPA	33472-8109	A-BLK	GC	PLR		M	R			3													16	SALEABLE		N/A	N/A	N/A	N/A
KEY A, BLACK, W/O CPA	33472-8110	A-BLK	GC	PLR		M	R	1				5	6	7		9	10	11	12	13			16	SALEABLE		N/A	N/A	N/A	N/A
KEY A, BLACK, W/O CPA	33472-8111	A-BLK	GC	PLR		M	R	1				5	6	7	8		10	11	12	13			16	SALEABLE		N/A	N/A	N/A	N/A
KEY A, BLACK, W/O CPA	33472-8112	A-BLK	GC	PLR		M	R			3												15		SALEABLE		N/A	N/A	N/A	N/A
KEY A, BLACK, W/CPA	33472-8113	A-BLK	GC	PLR	CPA	M	R			3												15		SALEABLE		N/A	N/A	N/A	N/A
KEY A, BLACK, W/O CPA	33472-8114	A-BLK	GC	PLR		M	R	1	2		4	5	6		8		10				14			SALEABLE		N/A	N/A	N/A	N/A
KEY B, LIGHT GRAY, W/O CPA	33472-8115	B-LG	GC	PLR		M	R						6							13	14	15	16	SALEABLE		N/A	N/A	N/A	N/A
KEY B, LIGHT GRAY, W/O CPA	33472-8116	B-LG	GC	PLR		M	R	1	2	3	4		6	7						13	14	15	16	SALEABLE		N/A	N/A	N/A	N/A
KEY B, LIGHT GRAY, W/O CPA	33472-8117	B-LG	GC	PLR		M	R				4	5	6	7	8	9	10	11	12	13	14	15	16	SALEABLE		N/A	N/A	N/A	N/A
KEY A, BLACK, W/O CPA	33472-8118	A-BLK	GC	PLR		M	R					5					10	11			14			SALEABLE		N/A	N/A	N/A	N/A
KEY A, BLACK, W/O CPA	33472-8119	A-BLK	GC	PLR		M	R			3		5			8		10	11			14	15		SALEABLE		N/A	N/A	N/A	N/A
KEY A, BLACK, W/O CPA	33472-8120	A-BLK	GC	PLR		M	R			3		5					10	11			14	15		SALEABLE		N/A	N/A	N/A	N/A
KEY A, BLACK, W/O CPA	33472-8121	A-BLK	GC	PLR		M	R			3			6	7		9		11	12	13	14	15	16	SALEABLE		N/A	N/A	N/A	N/A
KEY A, BLACK, W/O CPA	33472-8122	A-BLK	GC	PLR		M	R			3			6	7				11	12	13	14	15	16	SALEABLE		N/A	N/A	N/A	N/A
KEY A, BLACK, W/CPA	33472-8123	A-BLK	GC	PLR	CPA	M	R				4			7					12	13		15		SALEABLE		N/A	N/A	N/A	N/A
KEY A, BLACK, W/O CPA	33472-8124	A-BLK	GC	PLR		M	R				4	5				9		11	12	13		15	16	SALEABLE		N/A	N/A	N/A	N/A
KEY A, BLACK, W/O CPA	33472-8125	A-BLK	GC	PLR		M	R			3		5	6			9		11				15	16	SALEABLE		N/A	N/A	N/A	N/A
KEY A, BLACK, W/O CPA	33472-8126	A-BLK	GC	PLR		M	R			3	4					9		11	12	13				SALEABLE		N/A	N/A	N/A	N/A
KEY A, BLACK, W/O CPA	33472-8127	A-BLK	GC	PLR		M	R			3	4			7		9		11	12	13				SALEABLE		N/A	N/A	N/A	N/A
KEY A, BLACK, W/O CPA	33472-8128	A-BLK	GC	PLR		M	R				4	5		7		9		11	12	13		15	16	SALEABLE		N/A	N/A	N/A	N/A
KEY A, BLACK, W/O CPA	33472-8129	A-BLK	GC	PLR		M	R			3		5	6	7		9		11				15	16	SALEABLE		N/A	N/A	N/A	N/A

molex

MX150 RECEPTACLE 2X10 SEALED ASSEMBLY MAT SEAL
BOM AND PIN OUT SHEET

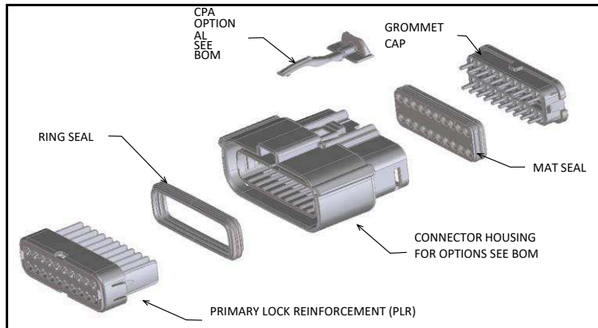

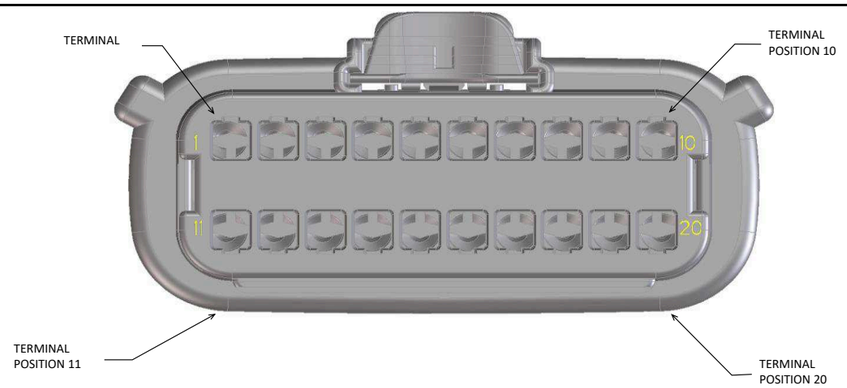

ABBREVIATION	DESCRIPTION	COLOR	MATERIAL
A-BLK	HOUSING, KEYING OPTION A	BLACK	SPS/NYLON GF20
B-LG	HOUSING, KEYING OPTION B	LIGHT GRAY	SPS/NYLON GF20
C-BR	HOUSING, KEYING OPTION C	BROWN	SPS/NYLON GF20
D-GR	HOUSING, KEYING OPTION D	GREEN	SPS/NYLON GF20
C-DG	HOUSING, KEYING OPTION C	DARK GRAY	SPS/NYLON GF20
D-SG	HOUSING, KEYING OPTION D	STONE GRAY	SPS/NYLON GF20
A-YW	HOUSING, KEYING OPTION A	YELLOW	SPS/NYLON GF20
A-BLK-CLIP	HOUSING, KEYING OPTION A WITH CLIPSLOT	BLACK	SPS/NYLON GF20
B-LG-CLIP	HOUSING, KEYING OPTION B WITH CLIPSLOT	LIGHT GRAY	SPS/NYLON GF20
C-DG-CLIP	HOUSING, KEYING OPTION C WITH CLIPSLOT	DARK GRAY	SPS/NYLON GF20
D-SG-CLIP	HOUSING, KEYING OPTION D WITH CLIPSLOT	STONE GRAY	SPS/NYLON GF20
A-YW-CLIP	HOUSING, KEYING OPTION A WITH CLIPSLOT	YELLOW	SPS/NYLON GF20
GCP	GROMMET CAP (PLUGGED)	BLACK	SPS/NYLON GF20
GCO	GROMMET CAP (OPEN)	BLACK	SPS/NYLON GF20
PLR	PLR	NATURAL	SPS/NYLON GF20
CPA	CPA	RED	PBT GF30
M	MAT SEAL	LIGHT BLUE	INHERENTLY LUBRICATED SILICONE
R	RING SEAL	GREEN	INHERENTLY LUBRICATED SILICONE

FOR ADDITIONAL INFORMATION SEE SD-33472-0001

ASSEMBLY DESCRIPTION	ASSEMBLY PART NUMBER	COMPONENT						BLOCKED TERMINALS																				STATUS	COMMENTS	OPTIONAL ATTATCHMENTS SOLD SEPERATELY			
		THE PRESENCE OF AN ABBREVIATION INDICATES THE PRESENCE OF THAT COMPONENT.						CAVITY WITH A NUMBER INDICATES BLOCKED TERMINAL POSITION CAVITY WITHOUT A NUMBER INDICATES OPEN TERMINAL POSITION																									
		HOUSING KEY/COLOR	GROMMET CAP	PLR	CPA	MAT SEAL	RING SEAL	1	2	3	4	5	6	7	8	9	10	11	12	13	14	15	16	17	18	19	20			BACKSHELL WITH RIBS	BACKSHELL WITHOUT RIBS	90˚ ADAPTOR WITH RIBS	90˚ ADAPTOR WITHOUT RIBS
KEY A, BLACK, W/O CPA	33472-2001	A-BLK	GCO	PLR		M	R																					SALEABLE		N/A	N/A	N/A	N/A
KEY B, LIGHT GRAY, W/O CPA	33472-2002	B-LG	GCO	PLR		M	R																					SALEABLE		N/A	N/A	N/A	N/A
KEY C, BROWN, W/O CPA	33472-2003	C-BR	GCO	PLR		M	R																					NOT RECOMMENDED	SEE 33472-2060	N/A	N/A	N/A	N/A
KEY D, GREEN, W/O CPA	33472-2004	D-GR	GCO	PLR		M	R																					NOT RECOMMENDED	SEE 33472-2061	N/A	N/A	N/A	N/A
VOID KEY	33472-2005																																
KEY A, BLACK, W/CPA	33472-2006	A-BLK	GCO	PLR	CPA	M	R																					SALEABLE		N/A	N/A	N/A	N/A
KEY B, LIGHT GRAY, W/CPA	33472-2007	B-LG	GCO	PLR	CPA	M	R																					SALEABLE		N/A	N/A	N/A	N/A
KEY C, BROWN, W/CPA	33472-2008	C-BR	GCO	PLR	CPA	M	R																					NOT RECOMMENDED	SEE 33472-2062	N/A	N/A	N/A	N/A
KEY D, GREEN, W/CPA	33472-2009	D-GR	GCO	PLR	CPA	M	R																					NOT RECOMMENDED	SEE 33472-2063	N/A	N/A	N/A	N/A
VOID KEY	33472-2010																																
KEY A, BLACK, W/CPA	33472-2011	A-BLK	GCP	PLR	CPA	M	R																				20	SALEABLE		N/A	N/A	N/A	N/A
KEY A, BLACK, W/O CPA	33472-2012	A-BLK	GCP	PLR		M	R											11										SALEABLE		N/A	N/A	N/A	N/A
KEY A, BLACK, W/O CPA	33472-2013	A-BLK	GCP	PLR		M	R				4	5	6	7							14	15	16	17				SALEABLE		N/A	N/A	N/A	N/A
KEY A, BLACK, W/O CPA	33472-2014	A-BLK	GCP	PLR		M	R							7									16					SALEABLE		N/A	N/A	N/A	N/A
KEY A, BLACK, W/CPA	33472-2015	A-BLK	GCP	PLR	CPA	M	R		2							9			12			15				19		SALEABLE		N/A	N/A	N/A	N/A
KEY A, BLACK, W/CPA	33472-2016	A-BLK	GCP	PLR	CPA	M	R			3						9				13						19		SALEABLE		N/A	N/A	N/A	N/A
KEY A, BLACK, W/CPA	33472-2017	A-BLK	GCP	PLR	CPA	M	R									9		11		13		15	16					SALEABLE		N/A	N/A	N/A	N/A
KEY A, BLACK, W/CPA	33472-2018	A-BLK	GCP	PLR	CPA	M	R										10	11	12								20	SALEABLE		N/A	N/A	N/A	N/A
KEY A, BLACK, W/CPA	33472-2019	A-BLK	GCP	PLR	CPA	M	R	1	2																		20	SALEABLE		N/A	N/A	N/A	N/A
KEY A, BLACK, W/CPA	33472-2020	A-BLK	GCP	PLR	CPA	M	R	1	2								10	11	12								20	SALEABLE		N/A	N/A	N/A	N/A
KEY A, BLACK, W/CPA	33472-2021	A-BLK	GCP	PLR	CPA	M	R	1	2								10	11	12	13	14						20	SALEABLE		N/A	N/A	N/A	N/A
KEY A, BLACK, W/CPA	33472-2022	A-BLK	GCP	PLR	CPA	M	R																16		18			SALEABLE		N/A	N/A	N/A	N/A
KEY A, BLACK, W/CPA	33472-2023	A-BLK	GCP	PLR	CPA	M	R																		18	19	20	SALEABLE		N/A	N/A	N/A	N/A
KEY A, BLACK, W/CPA	33472-2024	A-BLK	GCP	PLR	CPA	M	R		2																18	19	20	SALEABLE		N/A	N/A	N/A	N/A
KEY A, BLACK, W/CPA	33472-2025	A-BLK	GCP	PLR	CPA	M	R			3	4	5						11					16	17				SALEABLE		N/A	N/A	N/A	N/A
KEY A, BLACK, W/CPA	33472-2026	A-BLK	GCP	PLR	CPA	M	R			3	4						10				14					19		SALEABLE		N/A	N/A	N/A	N/A
KEY A, BLACK, W/CPA	33472-2027	A-BLK	GCP	PLR	CPA	M	R			3	4	5					10				14					19		SALEABLE		N/A	N/A	N/A	N/A
KEY A, BLACK, W/CPA	33472-2028	A-BLK	GCP	PLR	CPA	M	R			3	4	5						11			14		16	17	18	19	20	SALEABLE		N/A	N/A	N/A	N/A
KEY A, BLACK, W/CPA	33472-2029	A-BLK	GCP	PLR	CPA	M	R			3	4	5						11			14		16	17		19		SALEABLE		N/A	N/A	N/A	N/A
KEY A, BLACK, W/CPA	33472-2030	A-BLK	GCP	PLR	CPA	M	R			3	4	5					10				14			17		19		SALEABLE		N/A	N/A	N/A	N/A
KEY A, BLACK, W/CPA	33472-2031	A-BLK	GCP	PLR	CPA	M	R			3	4						10				14			17		19		SALEABLE		N/A	N/A	N/A	N/A
KEY A, BLACK, W/CPA	33472-2032	A-BLK	GCP	PLR	CPA	M	R										10		12	13	14					19		SALEABLE		N/A	N/A	N/A	N/A
KEY A, BLACK, W/CPA	33472-2033	A-BLK	GCP	PLR	CPA	M	R			3	4							11			14		16	17		19		SALEABLE		N/A	N/A	N/A	N/A
KEY A, BLACK, W/CPA	33472-2034	A-BLK	GCP	PLR	CPA	M	R											11										SALEABLE		N/A	N/A	N/A	N/A
KEY A, BLACK, W/CPA	33472-2035	A-BLK	GCP	PLR	CPA	M	R	1	2								10	11	12	13	14	15					20	SALEABLE		N/A	N/A	N/A	N/A
KEY A, BLACK, W/CPA	33472-2036	A-BLK	GCP	PLR	CPA	M	R	1	2								10	11	12			15					20	SALEABLE		N/A	N/A	N/A	N/A
KEY A, BLACK, W/CPA	33472-2037	A-BLK	GCP	PLR	CPA	M	R										10	11	12	13	14	15					20	SALEABLE		N/A	N/A	N/A	N/A
KEY A, BLACK, W/CPA	33472-2038	A-BLK	GCP	PLR	CPA	M	R										10	11	12	13	14						20	SALEABLE		N/A	N/A	N/A	N/A
KEY A, BLACK, W/CPA	33472-2039	A-BLK	GCP	PLR	CPA	M	R										10	11	12			15					20	SALEABLE		N/A	N/A	N/A	N/A
KEY A, BLACK, W/CPA	33472-2040	A-BLK	GCP	PLR	CPA	M	R			3							10	11	12			15	16	17			20	SALEABLE		N/A	N/A	N/A	N/A
KEY A, BLACK, W/CPA	33472-2041	A-BLK	GCP	PLR	CPA	M	R			3	4	5					10	11	12			15	16	17			20	SALEABLE		N/A	N/A	N/A	N/A
KEY A, BLACK, W/CPA	33472-2042	A-BLK	GCP	PLR	CPA	M	R			3												15	16	17			20	SALEABLE		N/A	N/A	N/A	N/A
KEY A, BLACK, W/CPA	33472-2043	A-BLK	GCP	PLR	CPA	M	R	1	2	3	4	5										15	16	17			20	SALEABLE		N/A	N/A	N/A	N/A
KEY A, BLACK, W/CPA	33472-2044	A-BLK	GCP	PLR	CPA	M	R	1	2	3	4	5															20	SALEABLE		N/A	N/A	N/A	N/A
KEY A, BLACK, W/CPA	33472-2045	A-BLK	GCP	PLR	CPA	M	R	1	2	3	4	5								13	14						20	SALEABLE		N/A	N/A	N/A	N/A
KEY A, BLACK, W/CPA	33472-2046	A-BLK	GCP	PLR	CPA	M	R	1	2	3	4	5								13	14	15	16	17			20	SALEABLE		N/A	N/A	N/A	N/A
KEY A, BLACK, W/CPA	33472-2047	A-BLK	GCP	PLR	CPA	M	R			3	4	5										15	16	17			20	SALEABLE		N/A	N/A	N/A	N/A
KEY A, BLACK, W/CPA	33472-2048	A-BLK	GCP	PLR	CPA	M	R			3	4	5															20	SALEABLE		N/A	N/A	N/A	N/A
KEY A, BLACK, W/CPA	33472-2049	A-BLK	GCP	PLR	CPA	M	R			3	4	5								13	14						20	SALEABLE		N/A	N/A	N/A	N/A
KEY A, BLACK, W/CPA	33472-2050	A-BLK	GCP	PLR	CPA	M	R			3	4	5								13	14	15	16	17			20	SALEABLE		N/A	N/A	N/A	N/A
KEY A, BLACK, W/CPA	33472-2051	A-BLK	GCP	PLR	CPA	M	R	1	2	3										13	14	15	16	17			20	SALEABLE		N/A	N/A	N/A	N/A
KEY A, BLACK, W/CPA	33472-2052	A-BLK	GCP	PLR	CPA	M	R	1	2	3										13	14						20	SALEABLE		N/A	N/A	N/A	N/A
KEY A, BLACK, W/CPA	33472-2053	A-BLK	GCP	PLR	CPA	M	R	1	2	3												15	16	17			20	SALEABLE		N/A	N/A	N/A	N/A
KEY A, BLACK, W/CPA	33472-2054	A-BLK	GCP	PLR	CPA	M	R	1	2	3																	20	SALEABLE		N/A	N/A	N/A	N/A
KEY A, BLACK, W/CPA	33472-2055	A-BLK	GCP	PLR	CPA	M	R			3										13	14						20	SALEABLE		N/A	N/A	N/A	N/A
KEY A, BLACK, W/CPA	33472-2056	A-BLK	GCP	PLR	CPA	M	R			3																	20	SALEABLE		N/A	N/A	N/A	N/A
KEY A, BLACK, W/O CPA	33472-2057	A-BLK	GCP	PLR		M	R			3	4						10				14			17		19		SALEABLE		N/A	N/A	N/A	N/A
KEY A, BLACK, W/O CPA	33472-2058	A-BLK	GCP	PLR	CPA	M	R													13	14	15					20	SALEABLE		N/A	N/A	N/A	N/A
KEY A, BLACK, W/O CPA	33472-2059	A-BLK	GCP	PLR		M	R										10				14			17		19		SALEABLE		N/A	N/A	N/A	N/A
KEY C, DARK GRAY, W/O CPA	33472-2060	C-DG	GCO	PLR		M	R																					SALEABLE		N/A	N/A	N/A	N/A
KEY D, STONE GRAY, W/O CPA	33472-2061	D-SG	GCO	PLR		M	R																					SALEABLE		N/A	N/A	N/A	N/A
KEY C, DARK GRAY, W/CPA	33472-2062	C-DG	GCO	PLR	CPA	M	R																					SALEABLE		N/A	N/A	N/A	N/A
KEY D, STONE GRAY, W/CPA	33472-2063	D-SG	GCO	PLR	CPA	M	R																					SALEABLE		N/A	N/A	N/A	N/A
KEY A, BLACK, W/O CPA	33472-2064	A-BLK	GCP	PLR		M	R										10				14			17	18	19		SALEABLE		N/A	N/A	N/A	N/A
KEY A, BLACK, W/O CPA	33472-2065	A-BLK	GCP	PLR		M	R			3							10			13	14			17	18	19		SALEABLE		N/A	N/A	N/A	N/A
KEY A, BLACK, W/O CPA	33472-2066	A-BLK	GCP	PLR		M	R			3							10			13	14			17	18	19	20	SALEABLE		N/A	N/A	N/A	N/A
KEY A, BLACK, W/O CPA	33472-2067	A-BLK	GCP	PLR		M	R				4	5					10				14	15		17		19		SALEABLE		N/A	N/A	N/A	N/A
KEY A, BLACK, W/O CPA	33472-2068	A-BLK	GCP	PLR		M	R				4	5					10				14	15		17	18	19		SALEABLE		N/A	N/A	N/A	N/A
KEY A, BLACK, W/O CPA	33472-2069	A-BLK	GCP	PLR		M	R				4	5					10				14	15		17	18	19	20	SALEABLE		N/A	N/A	N/A	N/A
KEY A, BLACK, W/O CPA	33472-2070	A-BLK	GCP	PLR		M	R			3			6	7			10			13	14			17	18	19	20	SALEABLE		N/A	N/A	N/A	N/A
KEY A, BLACK, W/O CPA	33472-2071	A-BLK	GCP	PLR		M	R				4			7									16					SALEABLE		N/A	N/A	N/A	N/A
KEY A, BLACK, W/O CPA	33472-2072	A-BLK	GCP	PLR		M	R		2	3	4	5	6	7					12	13	14	15	16	17				SALEABLE		N/A	N/A	N/A	N/A
KEY A, BLACK, W/O CPA	33472-2073	A-BLK	GCP	PLR		M	R			3	4	5								13		15			18	19		SALEABLE		N/A	N/A	N/A	N/A
KEY A, BLACK, W/O CPA	33472-2074	A-BLK	GCP	PLR		M	R				4	5	6	7									16	17				SALEABLE		N/A	N/A	N/A	N/A
KEY A, BLACK, W/O CPA	33472-2075	A-BLK	GCP	PLR		M	R	1	2	3	4	5	6		8		10							17	18	19	20	SALEABLE		N/A	N/A	N/A	N/A
KEY A, BLACK, W/O CPA	33472-2076	A-BLK	GCP	PLR		M	R																	17	18	19	20	SALEABLE		N/A	N/A	N/A	N/A
KEY A, BLACK, W/O CPA	33472-2077	A-BLK	GCP	PLR		M	R	1	2	3	4	5	6	7	8	9	10						16	17	18	19	20	SALEABLE		N/A	N/A	N/A	N/A
KEY A, BLACK, W/O CPA	33472-2078	A-BLK	GCP	PLR		M	R	1	2	3	4	5	6		8		10						16	17	18	19	20	SALEABLE		N/A	N/A	N/A	N/A
KEY A, BLACK, W/O CPA	33472-2079	A-BLK	GCP	PLR		M	R		2						8								16	17	18	19	20	SALEABLE		N/A	N/A	N/A	N/A

molex

MX150 RECEPTACLE 2X10 SEALED ASSEMBLY MAT SEAL
BOM AND PIN OUT SHEET

ASSEMBLY DESCRIPTION	ASSEMBLY PART NUMBER	COMPONENT: THE PRESENCE OF AN ABBREVIATION INDICATES THE PRESENCE OF THAT COMPONENT.						BLOCKED TERMINALS: CAVITY WITH A NUMBER INDICATES BLOCKED TERMINAL POSITION, CAVITY WITHOUT A NUMBER INDICATES OPEN TERMINAL POSITION																				STATUS	COMMENTS	OPTIONAL ATTATCHMENTS SOLD SEPERATELY			
		HOUSING KEY/COLOR	GROMMET CAP	PLR	CPA	MAT SEAL	RING SEAL	1	2	3	4	5	6	7	8	9	10	11	12	13	14	15	16	17	18	19	20			BACKSHELL WITH RIBS	BACKSHELL WITHOUT RIBS	90˚ ADAPTOR WITH RIBS	90˚ ADAPTOR WITHOUT RIBS
KEY A, BLACK, W/O CPA	33472-2080	A-BLK	GCP	PLR		M	R																16	17	18	19	20	SALEABLE		N/A	N/A	N/A	N/A
KEY A, BLACK, W/O CPA	33472-2081	A-BLK	GCP	PLR		M	R	1	2	3	4	5	6	7	8	9	10							17	18	19	20	SALEABLE		N/A	N/A	N/A	N/A
KEY A, BLACK, W/O CPA	33472-2082	A-BLK	GCP	PLR		M	R							7		9								17	18	19	20	SALEABLE		N/A	N/A	N/A	N/A
KEY A, BLACK, W/O CPA	33472-2083	A-BLK	GCP	PLR		M	R										10							17		19		SALEABLE		N/A	N/A	N/A	N/A
KEY A, BLACK, W/O CPA	33472-2084	A-BLK	GCP	PLR		M	R	1	2	3	4	5	6	7	8		10							17		19		SALEABLE		N/A	N/A	N/A	N/A
KEY A, BLACK, W/O CPA	33472-2085	A-BLK	GCP	PLR		M	R	1	2	3	4	5	6	7	8	9	10		12					17		19		SALEABLE		N/A	N/A	N/A	N/A
KEY A, BLACK, W/O CPA	33472-2086	A-BLK	GCP	PLR		M	R	1	2	3	4	5	6	7	8	9	10				14	15		17	18	19	20	SALEABLE		N/A	N/A	N/A	N/A
KEY A, BLACK, W/O CPA	33472-2087	A-BLK	GCP	PLR		M	R							7		9					14	15		17	18	19	20	SALEABLE		N/A	N/A	N/A	N/A
KEY A, BLACK, W/O CPA	33472-2088	A-BLK	GCP	PLR		M	R							7										17			20	SALEABLE		N/A	N/A	N/A	N/A
KEY A, YELLOW, W/CPA	33472-2089	A-YW	GCO	PLR	CPA	M	R																					SALEABLE		N/A	N/A	N/A	N/A
KEY A, BLACK, W/O CPA	33472-2090	A-BLK	GCP	PLR		M	R																				20	SALEABLE		N/A	N/A	N/A	N/A
KEY A, BLACK, W/O CPA	33472-2091	A-BLK	GCP	PLR		M	R		2													15	16					SALEABLE		N/A	N/A	N/A	N/A
KEY A, BLACK, W/CPA	33472-2092	A-BLK	GCP	PLR	CPA	M	R							7									16					SALEABLE		N/A	N/A	N/A	N/A
KEY A, YELLOW, W/O CPA	33472-2093	A-YW	GCO	PLR		M	R																					SALEABLE		N/A	N/A	N/A	N/A
KEY A, BLACK, W/O CPA	33472-2094	A-BLK	GCP	PLR		M	R				4						10	11	12	13	14	15	16		18	19	20	SALEABLE		N/A	N/A	N/A	N/A
KEY A, BLACK, W/CPA	33472-2095	A-BLK	GCP	PLR	CPA	M	R																		18	19		SALEABLE		N/A	N/A	N/A	N/A
KEY A, BLACK, W/CPA	33472-2096	A-BLK	GCP	PLR	CPA	M	R		2		4							11	12		14							SALEABLE		N/A	N/A	N/A	N/A
KEY A, BLACK, W/CPA	33472-2097	A-BLK	GCP	PLR	CPA	M	R									9	10											SALEABLE		N/A	N/A	N/A	N/A
KEY A, BLACK, W/CPA	33472-2098	A-BLK	GCP	PLR	CPA	M	R	1											12			15	16	17	18	19	20	SALEABLE		N/A	N/A	N/A	N/A
KEY A, BLACK, W/CPA	33472-2099	A-BLK	GCP	PLR	CPA	M	R	1	2	3	4	5	6	7	8	9		11	12	13	14	15	16		18	19	20	SALEABLE		N/A	N/A	N/A	N/A
KEY A, BLACK, W/CPA	33472-2100	A-BLK	GCP	PLR	CPA	M	R			3	4	5	6		8	9									18	19	20	SALEABLE		N/A	N/A	N/A	N/A
KEY A, BLACK, W/CPA	33472-2101	A-BLK	GCP	PLR	CPA	M	R	1	2	3	4	5	6					11	12	13	14	15	16	17	18	19	20	SALEABLE		N/A	N/A	N/A	N/A
KEY A, BLACK, W/O CPA	33472-2102	A-BLK	GCP	PLR		M	R										10				14			17	18	19	20	SALEABLE		N/A	N/A	N/A	N/A
KEY A, BLACK, W/CPA	33472-2103	A-BLK	GCP	PLR	CPA	M	R			3	4	5	6		8	9	10				14					19		SALEABLE		N/A	N/A	N/A	N/A
KEY A, BLACK, W/CPA	33472-2104	A-BLK	GCP	PLR	CPA	M	R			3					8	9									18	19	20	SALEABLE		N/A	N/A	N/A	N/A
KEY A, BLACK, W/O CPA	33472-2105	A-BLK	GCP	PLR		M	R									9				13	14			17	18	19	20	SALEABLE		N/A	N/A	N/A	N/A
KEY B, LIGHT GRAY, W/O CPA	33472-2106	B-LG	GCP	PLR		M	R						6	7	8								16					SALEABLE		N/A	N/A	N/A	N/A
KEY B, LIGHT GRAY, W/O CPA	33472-2107	B-LG	GCP	PLR		M	R								8								16					SALEABLE		N/A	N/A	N/A	N/A
KEY B, LIGHT GRAY, W/O CPA	33472-2108	B-LG	GCP	PLR		M	R						6	7		9	10											SALEABLE		N/A	N/A	N/A	N/A
KEY B, LIGHT GRAY, W/O CPA	33472-2109	B-LG	GCP	PLR		M	R			3		5	6	7		9	10											SALEABLE		N/A	N/A	N/A	N/A
KEY B, LIGHT GRAY, W/O CPA	33472-2110	B-LG	GCP	PLR		M	R			3		5				9	10											SALEABLE		N/A	N/A	N/A	N/A
KEY B, LIGHT GRAY, W/O CPA	33472-2111	B-LG	GCP	PLR		M	R			3	4	5				9	10											SALEABLE		N/A	N/A	N/A	N/A
KEY B, LIGHT GRAY, W/O CPA	33472-2112	B-LG	GCP	PLR		M	R			3	4	5				9	10					15		17	18	19	20	SALEABLE		N/A	N/A	N/A	N/A
KEY B, LIGHT GRAY, W/O CPA	33472-2113	B-LG	GCP	PLR		M	R			3	4	5	6	7		9	10					15		17	18	19	20	SALEABLE		N/A	N/A	N/A	N/A
KEY B, LIGHT GRAY, W/CPA	33472-2114	B-LG	GCP	PLR	CPA	M	R			3	4	5	6		8	9	10				14					19		SALEABLE		N/A	N/A	N/A	N/A
KEY A, YELLOW, W/CPA	33472-2115	A-YW	GCP	PLR	CPA	M	R			3			6	7	8	9	10	11	12	13	14				18			SALEABLE		N/A	N/A	N/A	N/A
KEY A, YELLOW, W/CPA	33472-2116	A-YW	GCP	PLR	CPA	M	R			3			6	7	8	9	10		12	13	14							SALEABLE		N/A	N/A	N/A	N/A
KEY A, YELLOW, W/CPA	33472-2117	A-YW	GCP	PLR	CPA	M	R			3				7			10				14	15						SALEABLE		N/A	N/A	N/A	N/A
KEY A, YELLOW, W/CPA	33472-2118	A-YW	GCP	PLR	CPA	M	R			3	4	5	6	7	8	9	10	11	12	13	14	15	16	17	18	19	20	SALEABLE		N/A	N/A	N/A	N/A
KEY A, YELLOW, W/CPA	33472-2119	A-YW	GCP	PLR	CPA	M	R			3	4	5	6	7	8	9	10	11	12	13	14				18			SALEABLE		N/A	N/A	N/A	N/A
KEY A, YELLOW, W/CPA	33472-2120	A-YW	GCP	PLR	CPA	M	R			3				7	8	9	10				14							SALEABLE		N/A	N/A	N/A	N/A
KEY A, BLACK, W/CPA	33472-2121	A-BLK	GCP	PLR	CPA	M	R											11	12	13	14	15	16	17	18	19	20	SALEABLE		N/A	N/A	N/A	N/A
KEY A, BLACK, W/CPA	33472-2122	A-BLK	GCP	PLR	CPA	M	R		2	3	4	5									14			17	18	19	20	SALEABLE		N/A	N/A	N/A	N/A
KEY A, BLACK, W/O CPA	33472-2123	A-BLK	GCP	PLR		M	R								8							15						SALEABLE		N/A	N/A	N/A	N/A
KEY A, BLACK, W/O CPA	33472-2124	A-BLK	GCP	PLR		M	R											11						17		19		SALEABLE		N/A	N/A	N/A	N/A
KEY A, BLACK, W/O CPA	33472-2125	A-BLK	GCP	PLR		M	R	1	2	3	4	5	6	7	8			11						17		19		SALEABLE		N/A	N/A	N/A	N/A
KEY A, BLACK, W/CPA	33472-2126	A-BLK	GCP	PLR	CPA	M	R	1							8	9		11								19	20	SALEABLE		N/A	N/A	N/A	N/A
KEY A, BLACK, W/CPA	33472-2127	A-BLK	GCP	PLR	CPA	M	R	1							8		10					15		17				SALEABLE		N/A	N/A	N/A	N/A
KEY A, BLACK, W/O CPA	33472-2128	A-BLK	GCP	PLR		M	R	1							8		10					15		17				SALEABLE		N/A	N/A	N/A	N/A
KEY A, BLACK, W/O CPA	33472-2129	A-BLK	GCP	PLR		M	R	1							8	9		11								19	20	SALEABLE		N/A	N/A	N/A	N/A
KEY A, BLACK, W/CPA	33472-2130	A-BLK	GCP	PLR	CPA	M	R	1							8		10			13	14	15		17				SALEABLE		N/A	N/A	N/A	N/A
KEY A, BLACK, W/O CPA	33472-2131	A-BLK	GCP	PLR		M	R				4										14							SALEABLE		N/A	N/A	N/A	N/A
KEY A, BLACK, W/O CPA	33472-2132	A-BLK	GCP	PLR		M	R				4	5	6	7	8	9	10				14	15	16	17	18	19	20	SALEABLE		N/A	N/A	N/A	N/A
KEY A, BLACK, W/O CPA	33472-2133	A-BLK	GCP	PLR		M	R	1	2	3	4	5	6	7	8	9	10	11	12	13	14	15	16	17	18	19	20	SALEABLE		N/A	N/A	N/A	N/A
KEY A, BLACK, W/O CPA	33472-2134	A-BLK	GCP	PLR		M	R	1								9			12									SALEABLE		N/A	N/A	N/A	N/A
KEY A, BLACK, W/O CPA	33472-2135	A-BLK	GCP	PLR		M	R	1																		19		SALEABLE		N/A	N/A	N/A	N/A
KEY A, BLACK, W/O CPA	33472-2136	A-BLK	GCP	PLR		M	R	1	2	3	4	5	6	7	8	9	10	11	12	13	14	15	16			19	20	SALEABLE		N/A	N/A	N/A	N/A
KEY A, BLACK, W/O CPA	33472-2137	A-BLK	GCP	PLR		M	R	1											12	13						19		SALEABLE		N/A	N/A	N/A	N/A
KEY A, BLACK, W/CPA	33472-2138	A-BLK	GCP	PLR	CPA	M	R									9	10		12	13	14	15	16	17				SALEABLE		N/A	N/A	N/A	N/A
KEY A, BLACK, W/O CPA	33472-2139	A-BLK	GCP	PLR		M	R	1	2	3	4	5	6		8		10			13			16			19	20	SALEABLE		N/A	N/A	N/A	N/A
KEY A, BLACK, W/O CPA	33472-2140	A-BLK	GCP	PLR		M	R		2						8					13			16			19	20	SALEABLE		N/A	N/A	N/A	N/A
KEY A, BLACK, W/O CPA	33472-2141	A-BLK	GCP	PLR		M	R													13			16			19	20	SALEABLE		N/A	N/A	N/A	N/A
KEY B, LIGHT GRAY, W/O CPA	33472-2142	B-LG	GCP	PLR		M	R	1	2	3	4	5	6	7	8			11						17		19		SALEABLE		N/A	N/A	N/A	N/A
KEY B, LIGHT GRAY, W/O CPA	33472-2143	B-LG	GCP	PLR		M	R											11						17		19		SALEABLE		N/A	N/A	N/A	N/A
KEY A, BLACK, W/O CPA	33472-2144	A-BLK	GCP	PLR		M	R	1	2	3	4	5		7	8								16			19		SALEABLE		N/A	N/A	N/A	N/A
KEY A, BLACK, W/O CPA	33472-2145	A-BLK	GCP	PLR		M	R	1	2	3				7			10						16			19		SALEABLE		N/A	N/A	N/A	N/A
KEY A, BLACK, W/CPA	33472-2146	A-BLK	GCP	PLR	CPA	M	R	1								9			12									SALEABLE		N/A	N/A	N/A	N/A
KEY A, BLACK, W/O CPA	33472-2147	A-BLK	GCP	PLR		M	R	1	2	3	4	5		7	8					13	14	15	16			19	20	SALEABLE		N/A	N/A	N/A	N/A
KEY A, BLACK, W/O CPA	33472-2148	A-BLK	GCP	PLR		M	R	1	2	3				7			10			13	14	15	16			19	20	SALEABLE		N/A	N/A	N/A	N/A
KEY A, BLACK, W/CPA	33472-2149	A-BLK	GCP	PLR	CPA	M	R										10									19	20	SALEABLE		N/A	N/A	N/A	N/A
KEY A, BLACK, W/CPA	33472-2150	A-BLK	GCP	PLR	CPA	M	R							7		9	10						16					SALEABLE		N/A	N/A	N/A	N/A
KEY A, BLACK, W/CPA	33472-2151	A-BLK	GCP	PLR	CPA	M	R	1	2	3	4					9	10			13	14			17	18	19	20	SALEABLE		N/A	N/A	N/A	N/A
KEY A, BLACK, W/O CPA	33472-2152	A-BLK	GCP	PLR		M	R	1	2	3	4	5		7	8	9							16	17	18	19	20	SALEABLE		N/A	N/A	N/A	N/A
KEY A, BLACK, W/O CPA	33472-2153	A-BLK	GCP	PLR		M	R				4	5	6						12			15	16	17	18	19		SALEABLE		N/A	N/A	N/A	N/A
KEY A, BLACK, W/O CPA	33472-2154	A-BLK	GCP	PLR		M	R	1				5	6	7	8				12	13		15				19		SALEABLE		N/A	N/A	N/A	N/A
KEY A, BLACK, W/CPA	33472-2155	A-BLK	GCP	PLR	CPA	M	R	1	2	3	4	5	6										16	17	18	19	20	SALEABLE		N/A	N/A	N/A	N/A
KEY A, BLACK, W/CPA	33472-2156	A-BLK	GCP	PLR	CPA	M	R																16	17	18	19	20	SALEABLE		N/A	N/A	N/A	N/A
KEY A, BLACK, W/CPA	33472-2157	A-BLK	GCP	PLR	CPA	M	R									9				13	14			17	18	19	20	SALEABLE		N/A	N/A	N/A	N/A
KEY A, BLACK, W/CPA	33472-2158	A-BLK	GCP	PLR	CPA	M	R	1	2	3	4	5	6		8		10							17	18	19	20	SALEABLE		N/A	N/A	N/A	N/A
KEY B, LIGHT GRAY, W/CPA	33472-2159	B-LG	GCP	PLR	CPA	M	R									9	10	11				15	16	17			20	SALEABLE		N/A	N/A	N/A	N/A
KEY B, LIGHT GRAY, W/CPA	33472-2160	B-LG	GCP	PLR	CPA	M	R				4	5	6			9	10	11			14				18			SALEABLE		N/A	N/A	N/A	N/A
KEY B, LIGHT GRAY, W/CPA	33472-2161	B-LG	GCP	PLR	CPA	M	R				4	5	6	7			10								18			SALEABLE		N/A	N/A	N/A	N/A
KEY B, LIGHT GRAY, W/CPA	33472-2162	B-LG	GCP	PLR	CPA	M	R				4	5	6			9	10	11									20	SALEABLE		N/A	N/A	N/A	N/A
KEY B, LIGHT GRAY, W/CPA	33472-2163	B-LG	GCP	PLR	CPA	M	R				4	5	6								14					19	20	SALEABLE		N/A	N/A	N/A	N/A
KEY A, BLACK, W/CPA	33472-2164	A-BLK	GCP	PLR	CPA	M	R									9	10			13	14			17	18	19	20	SALEABLE		N/A	N/A	N/A	N/A
KEY A, BLACK, W/O CPA	33472-2165	A-BLK	GCP	PLR		M	R			3	4	5	6						12			15	16	17	18	19		SALEABLE		N/A	N/A	N/A	N/A
KEY A, BLACK, W/CPA	33472-2167	A-BLK	GCP	PLR	CPA	M	R													13						19	20	SALEABLE		N/A	N/A	N/A	N/A
KEY A, BLACK, W/O CPA	33472-2168	A-BLK	GCP	PLR		M	R		2						8		10							17		19		SALEABLE		N/A	N/A	N/A	N/A
KEY A, BLACK, W/O CPA	33472-2169	A-BLK	GCP	PLR		M	R																16					SALEABLE		N/A	N/A	N/A	N/A
KEY A, BLACK, W/O CPA	33472-2170	A-BLK	GCP	PLR		M	R	1	2	3	4	5		7	8								16			19	20	SALEABLE		N/A	N/A	N/A	N/A
KEY A, BLACK, W/O CPA	33472-2171	A-BLK	GCP	PLR		M	R	1	2	3				7			10						16			19	20	SALEABLE		N/A	N/A	N/A	N/A
KEY A, BLACK, W/O CPA	33472-2172	A-BLK	GCP	PLR		M	R	1	2	3	4	5	6		8		10				14	15		17	18	19	20	SALEABLE		N/A	N/A	N/A	N/A
KEY A, BLACK, W/O CPA	33472-2173	A-BLK	GCP	PLR		M	R														14	15		17	18	19	20	SALEABLE		N/A	N/A	N/A	N/A
KEY A, BLACK, W/O CPA	33472-2174	A-BLK	GCP	PLR		M	R		2						8									17	18	19	20	SALEABLE		N/A	N/A	N/A	N/A
KEY A, BLACK, W/O CPA	33472-2175	A-BLK	GCP	PLR		M	R	1	2	3	4	5	6		8		10				14	15			18		20	SALEABLE		N/A	N/A	N/A	N/A
KEY A, BLACK, W/O CPA	33472-2176	A-BLK	GCP	PLR		M	R	1	2	3	4	5	6		8		10								18		20	SALEABLE		N/A	N/A	N/A	N/A
KEY A, BLACK, W/O CPA	33472-2177	A-BLK	GCP	PLR		M	R														14	15			18		20	SALEABLE		N/A	N/A	N/A	N/A
KEY A, BLACK, W/O CPA	33472-2178	A-BLK	GCP	PLR		M	R																		18		20	SALEABLE		N/A	N/A	N/A	N/A
KEY A, BLACK, W/O CPA	33472-2179	A-BLK	GCP	PLR		M	R	1	2	3	4	5	6													19	20	SALEABLE		N/A	N/A	N/A	N/A
KEY A, BLACK, W/O CPA	33472-2180	A-BLK	GCP	PLR		M	R						6														20	SALEABLE		N/A	N/A	N/A	N/A
KEY A, BLACK, W/CPA	33472-2181	A-BLK	GCP	PLR	CPA	M	R	1		3		5		7		9			12		14		16		18		20	SALEABLE		N/A	N/A	N/A	N/A
KEY A, BLACK, W/CPA	33472-2182	A-BLK	GCP	PLR	CPA	M	R		2		4		6		8		10	11		13		15		17		19		SALEABLE		N/A	N/A	N/A	N/A
KEY A, BLACK, W/O CPA	33472-2183	A-BLK	GCP	PLR		M	R														14	15	16					SALEABLE		N/A	N/A	N/A	N/A
KEY A, BLACK, W/O CPA	33472-2184	A-BLK	GCP	PLR		M	R		2						8								16					SALEABLE		N/A	N/A	N/A	N/A
KEY A, BLACK, W/O CPA	33472-2185	A-BLK	GCP	PLR		M	R	1	2	3	4	5	6		8		10						16					SALEABLE		N/A	N/A	N/A	N/A
KEY A, BLACK, W/O CPA	33472-2186	A-BLK	GCP	PLR		M	R		2						8						14	15	16					SALEABLE		N/A	N/A	N/A	N/A
KEY A, BLACK, W/O CPA	33472-2187	A-BLK	GCP	PLR		M	R	1	2	3	4	5	6		8		10				14	15	16					SALEABLE		N/A	N/A	N/A	N/A
KEY A, BLACK, W/O CPA	33472-2188	A-BLK	GCP	PLR		M	R														14	15	16	17	18	19	20	SALEABLE		N/A	N/A	N/A	N/A
KEY A, BLACK, W/O CPA	33472-2189	A-BLK	GCP	PLR		M	R		2						8								16	17	18	19	20	SALEABLE		N/A	N/A	N/A	N/A
KEY A, BLACK, W/O CPA	33472-2190	A-BLK	GCP	PLR		M	R	1	2	3	4	5	6		8		10				14	15	16	17	18	19	20	SALEABLE		N/A	N/A	N/A	N/A

molex

MX150 RECEPTACLE 2X10 SEALED ASSEMBLY MAT SEAL
BOM AND PIN OUT SHEET

ASSEMBLY DESCRIPTION	ASSEMBLY PART NUMBER	COMPONENT						BLOCKED TERMINALS																				STATUS	COMMENTS	OPTIONAL ATTATCHMENTS SOLD SEPERATELY			
		THE PRESENCE OF AN ABBREVIATION INDICATES THE PRESENCE OF THAT COMPONENT.						CAVITY WITH A NUMBER INDICATES BLOCKED TERMINAL POSITION CAVITY WITHOUT A NUMBER INDICATES OPEN TERMINAL POSITION																									
		HOUSING KEY/COLOR	GROMMET CAP	PLR	CPA	MAT SEAL	RING SEAL	1	2	3	4	5	6	7	8	9	10	11	12	13	14	15	16	17	18	19	20			BACKSHELL WITH RIBS	BACKSHELL WITHOUT RIBS	90˚ ADAPTOR WITH RIBS	90˚ ADAPTOR WITHOUT RIBS
KEY A, BLACK, W/CPA	33472-2191	A-BLK	GCP	PLR	CPA	M	R							7		9							16					SALEABLE		N/A	N/A	N/A	N/A
KEY A, BLACK, W/O CPA	33472-2192	A-BLK	GCP	PLR		M	R										10				14	15		17		19		SALEABLE		N/A	N/A	N/A	N/A
KEY A, BLACK, W/O CPA	33472-2193	A-BLK	GCP	PLR		M	R		2						8						14	15	16	17	18	19	20	SALEABLE		N/A	N/A	N/A	N/A
KEY A, BLACK, W/O CPA	33472-2194	A-BLK	GCP	PLR		M	R			3	4	5	6	7	8	9	10			13	14			17	18	19	20	SALEABLE		N/A	N/A	N/A	N/A
KEY A, BLACK, W/O CPA	33472-2195	A-BLK	GCP	PLR		M	R			3	4	5	6	7	8	9	10			13	14			17	18	19		SALEABLE		N/A	N/A	N/A	N/A
KEY A, BLACK, W/O CPA	33472-2196	A-BLK	GCP	PLR		M	R																16				20	SALEABLE		N/A	N/A	N/A	N/A
KEY A, BLACK, W/O CPA	33472-2197	A-BLK	GCP	PLR		M	R							7					12					17			20	SALEABLE		N/A	N/A	N/A	N/A
KEY A, BLACK, W/O CPA	33472-2198	A-BLK	GCP	PLR		M	R			3													16	17	18	19	20	SALEABLE		N/A	N/A	N/A	N/A
KEY A, BLACK, W/O CPA	33472-2199	A-BLK	GCP	PLR		M	R		2						8													SALEABLE		N/A	N/A	N/A	N/A
KEY A, BLACK, W/O CPA	33472-2200	A-BLK	GCP	PLR		M	R	1	2	3	4	5	6		8		10				14	15						SALEABLE		N/A	N/A	N/A	N/A
KEY A, BLACK, W/O CPA	33472-2201	A-BLK	GCP	PLR		M	R		2						8						14	15						SALEABLE		N/A	N/A	N/A	N/A
KEY A, BLACK, W/O CPA	33472-2202	A-BLK	GCP	PLR		M	R														14	15						SALEABLE		N/A	N/A	N/A	N/A
KEY B, LIGHT GRAY, W/O CPA	33472-2203	B-LG	GCP	PLR		M	R		2	3						9			12	13						19		SALEABLE		N/A	N/A	N/A	N/A
KEY B, LIGHT GRAY, W/O CPA	33472-2204	B-LG	GCP	PLR		M	R	1	2	3	4	5			8	9	10		12	13	14	15			18	19	20	SALEABLE		N/A	N/A	N/A	N/A
KEY B, LIGHT GRAY, W/CPA	33472-2205	B-LG	GCP	PLR	CPA	M	R											11				15	16	17			20	SALEABLE		N/A	N/A	N/A	N/A
KEY B, LIGHT GRAY, W/CPA	33472-2206	B-LG	GCP	PLR	CPA	M	R											11				15	16	17				SALEABLE		N/A	N/A	N/A	N/A
KEY A, BLACK, W/O CPA	33472-2207	A-BLK	GCP	PLR		M	R					5					10										20	SALEABLE		N/A	N/A	N/A	N/A
KEY A, BLACK, W/O CPA	33472-2208	A-BLK	GCP	PLR		M	R					5					10								18	19	20	SALEABLE		N/A	N/A	N/A	N/A
KEY A, BLACK, W/O CPA	33472-2209	A-BLK	GCP	PLR		M	R					5																SALEABLE		N/A	N/A	N/A	N/A
KEY A, BLACK, W/O CPA	33472-2210	A-BLK	GCP	PLR		M	R										10										20	SALEABLE		N/A	N/A	N/A	N/A
KEY A, BLACK, W/O CPA	33472-2211	A-BLK	GCP	PLR		M	R			3	4	5					10										20	SALEABLE		N/A	N/A	N/A	N/A
KEY A, BLACK, W/O CPA	33472-2212	A-BLK	GCP	PLR		M	R			3	4	5																SALEABLE		N/A	N/A	N/A	N/A
KEY A, BLACK, W/O CPA	33472-2213	A-BLK	GCP	PLR		M	R			3	4				8	9	10		12	13							20	SALEABLE		N/A	N/A	N/A	N/A
KEY A, BLACK, W/O CPA	33472-2214	A-BLK	GCP	PLR		M	R			3	4						10										20	SALEABLE		N/A	N/A	N/A	N/A
KEY A, BLACK, W/O CPA	33472-2215	A-BLK	GCP	PLR		M	R			3	4																	SALEABLE		N/A	N/A	N/A	N/A
KEY B, LIGHT GRAY, W/O CPA	33472-2216	B-LG	GCP	PLR		M	R	1	2	3	4	5	6	7	8			11	12	13				17		19		SALEABLE		N/A	N/A	N/A	N/A
KEY B, LIGHT GRAY, W/O CPA	33472-2217	B-LG	GCP	PLR		M	R											11	12	13				17		19		SALEABLE		N/A	N/A	N/A	N/A
KEY A, BLACK, W/O CPA	33472-2218	A-BLK	GCP	PLR		M	R				4	5			8								16				20	SALEABLE		N/A	N/A	N/A	N/A
KEY A, BLACK, W/O CPA	33472-2219	A-BLK	GCP	PLR		M	R										10	11	12				16				20	SALEABLE		N/A	N/A	N/A	N/A
KEY A, BLACK, W/O CPA	33472-2220	A-BLK	GCP	PLR		M	R	1	2	3	4	5			8								16				20	SALEABLE		N/A	N/A	N/A	N/A
KEY A, BLACK, W/O CPA	33472-2221	A-BLK	GCP	PLR		M	R	1	2	3							10	11	12				16				20	SALEABLE		N/A	N/A	N/A	N/A
KEY A, BLACK, W/O CPA	33472-2222	A-BLK	GCP	PLR		M	R		2	3			6															SALEABLE		N/A	N/A	N/A	N/A
KEY A, BLACK, W/O CPA	33472-2223	A-BLK	GCP	PLR		M	R		2	3														17	18			SALEABLE		N/A	N/A	N/A	N/A
KEY A, BLACK, W/O CPA	33472-2224	A-BLK	GCP	PLR		M	R	1	2	3			6	7														SALEABLE		N/A	N/A	N/A	N/A
KEY A, BLACK, W/O CPA	33472-2225	A-BLK	GCP	PLR		M	R	1	2	3	4	5	6		8		10											SALEABLE		N/A	N/A	N/A	N/A
KEY A, BLACK, W/O CPA	33472-2226	A-BLK	GCP	PLR		M	R							7					12				16					SALEABLE		N/A	N/A	N/A	N/A
KEY A, BLACK, W/O CPA	33472-2227	A-BLK	GCP	PLR		M	R	1	2	3	4	5	6	7	8				12	13	14	15		17	18	19	20	SALEABLE		N/A	N/A	N/A	N/A
KEY A, BLACK, W/O CPA	33472-2228	A-BLK	GCP	PLR		M	R	1	2	3	4	5	6	7	8									17	18	19	20	SALEABLE		N/A	N/A	N/A	N/A
KEY A, BLACK, W/O CPA	33472-2229	A-BLK	GCP	PLR		M	R												12	13	14	15		17	18	19	20	SALEABLE		N/A	N/A	N/A	N/A
KEY A, BLACK, W/O CPA	33472-2230	A-BLK	GCP	PLR		M	R									9	10	11					16	17	18	19	20	SALEABLE		N/A	N/A	N/A	N/A
KEY A, BLACK, W/O CPA	33472-2231	A-BLK	GCP	PLR		M	R	1	2	3	4	5	6	7	8	9	10	11					16	17	18	19	20	SALEABLE		N/A	N/A	N/A	N/A
KEY A, BLACK, W/O CPA	33472-2232	A-BLK	GCP	PLR		M	R									9	10	11	12	13	14	15	16	17	18	19	20	SALEABLE		N/A	N/A	N/A	N/A
KEY A, BLACK, W/O CPA	33472-2233	A-BLK	GCP	PLR		M	R																	17	18	19	20	SALEABLE		N/A	N/A	N/A	N/A
KEY A, BLACK, W/O CPA	33472-2234	A-BLK	GCP	PLR		M	R		2	3			6															SALEABLE		N/A	N/A	N/A	N/A
KEY A, BLACK, W/O CPA	33472-2235	A-BLK	GCP	PLR		M	R		2	3			6											17	18			SALEABLE		N/A	N/A	N/A	N/A
KEY A, BLACK, W/O CPA	33472-2236	A-BLK	GCP	PLR		M	R			3	4	5	6	7			10										20	SALEABLE		N/A	N/A	N/A	N/A
KEY A, BLACK, W/O CPA	33472-2237	A-BLK	GCP	PLR		M	R			3	4		6	7	8	9	10		12	13							20	SALEABLE		N/A	N/A	N/A	N/A
KEY A, BLACK, W/O CPA	33472-2238	A-BLK	GCP	PLR		M	R			3	4		6	7			10										20	SALEABLE		N/A	N/A	N/A	N/A
KEY A, BLACK, W/O CPA	33472-2239	A-BLK	GCP	PLR		M	R			3	4	5	6	7					12	13								SALEABLE		N/A	N/A	N/A	N/A
KEY A, BLACK, W/O CPA	33472-2240	A-BLK	GCP	PLR		M	R					5													18	19		SALEABLE		N/A	N/A	N/A	N/A
KEY A, BLACK, W/O CPA	33472-2241	A-BLK	GCP	PLR		M	R			3	4		6	7														SALEABLE		N/A	N/A	N/A	N/A
KEY A, BLACK, W/O CPA	33472-2242	A-BLK	GCP	PLR		M	R					5	6	7								15	16					SALEABLE		N/A	N/A	N/A	N/A
KEY B, LIGHT GRAY, W/O CPA	33472-2243	B-LG	GCP	PLR		M	R		2	3			6			9	10		12	13			16			19	20	SALEABLE		N/A	N/A	N/A	N/A
KEY B, LIGHT GRAY, W/O CPA	33472-2244	B-LG	GCP	PLR		M	R		2	3			6			9	10		12	13			16		18	19	20	SALEABLE		N/A	N/A	N/A	N/A
KEY B, LIGHT GRAY, W/O CPA	33472-2245	B-LG	GCP	PLR		M	R		2	3						9			12	13					18	19		SALEABLE		N/A	N/A	N/A	N/A
KEY B, LIGHT GRAY, W/O CPA	33472-2246	B-LG	GCP	PLR		M	R	1	2	3					8	9	10		12	13					18	19	20	SALEABLE		N/A	N/A	N/A	N/A
KEY B, LIGHT GRAY, W/O CPA	33472-2247	B-LG	GCP	PLR		M	R		2	3					8	9			12	13						19		SALEABLE		N/A	N/A	N/A	N/A
KEY B, LIGHT GRAY, W/O CPA	33472-2248	B-LG	GCP	PLR		M	R		2	3					8	9			12	13					18	19		SALEABLE		N/A	N/A	N/A	N/A
KEY B, LIGHT GRAY, W/O CPA	33472-2249	B-LG	GCP	PLR		M	R	1	2	3	4	5	6	7	8			11	12	13				17		19		SALEABLE		N/A	N/A	N/A	N/A
KEY B, LIGHT GRAY, W/O CPA	33472-2250	B-LG	GCP	PLR		M	R											11	12	13				17		19		SALEABLE		N/A	N/A	N/A	N/A
KEY A, BLACK, W/CPA	33472-2251	A-BLK	GCP	PLR	CPA	M	R					5																SALEABLE		N/A	N/A	N/A	N/A
KEY A, BLACK, W/O CPA	33472-2252	A-BLK	GCP	PLR		M	R		2	3			6				10		12		14							SALEABLE		N/A	N/A	N/A	N/A
KEY A, BLACK, W/O CPA	33472-2253	A-BLK	GCP	PLR		M	R	1	2	3			6	7			10	11	12		14		16			19		SALEABLE		N/A	N/A	N/A	N/A
KEY A, BLACK, W/O CPA	33472-2254	A-BLK	GCP	PLR		M	R			3	4	5	6	7											18	19		SALEABLE		N/A	N/A	N/A	N/A
KEY A, BLACK, W/O CPA	33472-2255	A-BLK	GCP	PLR		M	R			3	4	5	6	7			10								18	19	20	SALEABLE		N/A	N/A	N/A	N/A
KEY A, BLACK, W/O CPA	33472-2256	A-BLK	GCP	PLR		M	R			3	4	5	6	7														SALEABLE		N/A	N/A	N/A	N/A
KEY A, BLACK, W/O CPA	33472-2257	A-BLK	GCP	PLR		M	R			3	4						10	11	12			15	16	17	18	19	20	SALEABLE		N/A	N/A	N/A	N/A
KEY A, BLACK, W/O CPA	33472-2258	A-BLK	GCP	PLR		M	R										10	11	12			15	16	17	18	19	20	SALEABLE		N/A	N/A	N/A	N/A
KEY A, BLACK, W/O CPA	33472-2259	A-BLK	GCP	PLR		M	R			3	4						10	11	12				16				20	SALEABLE		N/A	N/A	N/A	N/A
KEY A, BLACK, W/O CPA	33472-2260	A-BLK	GCP	PLR		M	R											11	12	13	14						20	SALEABLE		N/A	N/A	N/A	N/A
KEY A, BLACK, W/O CPA	33472-2261	A-BLK	GCP	PLR		M	R				4			7							14			17		19		SALEABLE		N/A	N/A	N/A	N/A
KEY A, BLACK, W/O CPA	33472-2262	A-BLK	GCP	PLR		M	R			3	4			7					12		14			17		19	20	SALEABLE		N/A	N/A	N/A	N/A
KEY A, BLACK, W/O CPA	33472-2263	A-BLK	GCP	PLR		M	R	1			4	5			8								16				20	SALEABLE		N/A	N/A	N/A	N/A
KEY A, BLACK, W/O CPA	33472-2264	A-BLK	GCP	PLR		M	R	1									10	11	12				16				20	SALEABLE		N/A	N/A	N/A	N/A
KEY A, BLACK, W/O CPA	33472-2265	A-BLK	GCP	PLR		M	R										10	11	12				16				20	SALEABLE		N/A	N/A	N/A	N/A
KEY A, BLACK, W/CPA	33472-2266	A-BLK	GCP	PLR	CPA	M	R	1	2	3	4	5	6	7	8	9	10	11	12	13	14	15	16	17	18	19	20	SALEABLE		N/A	N/A	N/A	N/A
KEY A, BLACK, W/O CPA	33472-2267	A-BLK	GCP	PLR		M	R	1			4	5			8													SALEABLE		N/A	N/A	N/A	N/A
KEY A, BLACK, W/O CPA	33472-2268	A-BLK	GCP	PLR		M	R	1									10	11	12									SALEABLE		N/A	N/A	N/A	N/A
KEY A, BLACK, W/O CPA	33472-2269	A-BLK	GCP	PLR		M	R				4	5			8													SALEABLE		N/A	N/A	N/A	N/A
KEY A, BLACK, W/O CPA	33472-2270	A-BLK	GCP	PLR		M	R										10	11	12									SALEABLE		N/A	N/A	N/A	N/A
KEY A, BLACK, W/O CPA	33472-2271	A-BLK	GCP	PLR		M	R		2					7	8	9	10		12	13			16	17	18		20	SALEABLE		N/A	N/A	N/A	N/A
KEY A, BLACK, W/O CPA	33472-2272	A-BLK	GCP	PLR		M	R	1	2						8	9	10		12	13			16	17	18			SALEABLE		N/A	N/A	N/A	N/A
KEY A, BLACK, W/O CPA	33472-2273	A-BLK	GCP	PLR		M	R	1	2	3					8	9	10		12	13	14	15	16	17	18	19		SALEABLE		N/A	N/A	N/A	N/A
KEY A, BLACK, W/O CPA	33472-2274	A-BLK	GCP	PLR		M	R	1	2	3				7	8	9	10		12	13	14	15	16	17	18	19	20	SALEABLE		N/A	N/A	N/A	N/A
KEY A, BLACK, W/O CPA	33472-2275	A-BLK	GCP	PLR		M	R		2					7	8	9	10		12	13				17	18			SALEABLE		N/A	N/A	N/A	N/A
KEY A, BLACK, W/O CPA	33472-2276	A-BLK	GCP	PLR		M	R	1						7			10		12	13				17	18			SALEABLE		N/A	N/A	N/A	N/A
KEY A, BLACK, W/O CPA	33472-2277	A-BLK	GCP	PLR		M	R				4	5		7	8								16			19	20	SALEABLE		N/A	N/A	N/A	N/A
KEY A, BLACK, W/O CPA	33472-2278	A-BLK	GCP	PLR		M	R							7			10						16			19	20	SALEABLE		N/A	N/A	N/A	N/A
KEY A, BLACK, W/O CPA	33472-2279	A-BLK	GCP	PLR		M	R		2	3	4	5		7	8	9	10	11	12	13	14	15	16	17	18	19	20	SALEABLE		N/A	N/A	N/A	N/A
KEY A, BLACK, W/O CPA	33472-2280	A-BLK	GCP	PLR		M	R		2	3	4	5		7	8					13	14			17	18	19	20	SALEABLE		N/A	N/A	N/A	N/A
KEY A, BLACK, W/O CPA	33472-2281	A-BLK	GCP	PLR		M	R		2	3		5								13				17		19	20	SALEABLE		N/A	N/A	N/A	N/A
KEY A, BLACK, W/CPA	33472-2282	A-BLK	GCP	PLR	CPA	M	R		2	3	4	5		7	8	9	10	11	12	13	14	15	16	17	18	19	20	SALEABLE		N/A	N/A	N/A	N/A
KEY A, BLACK, W/CPA	33472-2283	A-BLK	GCP	PLR	CPA	M	R		2	3	4	5		7	8					13	14			17	18	19	20	SALEABLE		N/A	N/A	N/A	N/A
KEY A, BLACK, W/CPA	33472-2284	A-BLK	GCP	PLR	CPA	M	R		2	3		5								13				17		19	20	SALEABLE		N/A	N/A	N/A	N/A
KEY A, BLACK, W/O CPA	33472-2285	A-BLK	GCP	PLR		M	R	1						7		9						15						SALEABLE		N/A	N/A	N/A	N/A
KEY A, BLACK, W/O CPA	33472-2286	A-BLK	GCP	PLR		M	R	1	2	3	4	5	6	7	8								16	17	18	19	20	SALEABLE		N/A	N/A	N/A	N/A
KEY A, BLACK, W/O CPA	33472-2287	A-BLK	GCP	PLR		M	R																16	17	18	19	20	SALEABLE		N/A	N/A	N/A	N/A
KEY A, BLACK, W/O CPA	33472-2288	A-BLK	GCP	PLR		M	R	1	2	3	4	5	6	7	8										18	19	20	SALEABLE		N/A	N/A	N/A	N/A
KEY A, BLACK, W/O CPA	33472-2289	A-BLK	GCP	PLR		M	R																		18			SALEABLE		N/A	N/A	N/A	N/A
KEY A, BLACK, W/CPA	33472-2290	A-BLK	GCP	PLR	CPA	M	R											11	12	13	14	15	16	17	18			SALEABLE		N/A	N/A	N/A	N/A
KEY B, LIGHT GRAY, W/CPA	33472-2291	B-LG	GCP	PLR	CPA	M	R			3			6	7					12					17				SALEABLE		N/A	N/A	N/A	N/A
KEY A, BLACK, W/O CPA	33472-2292	A-BLK	GCP	PLR		M	R		2						8	9	10	11	12	13	14	15	16	17	18	19	20	SALEABLE		N/A	N/A	N/A	N/A
KEY A, BLACK, W/O CPA	33472-2293	A-BLK	GCP	PLR		M	R									9	10	11	12	13							20	SALEABLE		N/A	N/A	N/A	N/A
KEY A, BLACK, W/O CPA	33472-2294	A-BLK	GCP	PLR		M	R		2						8	9	10	11	12	13							20	SALEABLE		N/A	N/A	N/A	N/A
KEY A, BLACK, W/O CPA	33472-2295	A-BLK	GCP	PLR		M	R	1	2	3	4	5	6	7	8	9	10	11	12	13							20	SALEABLE		N/A	N/A	N/A	N/A
KEY A, BLACK, W/O CPA	33472-2296	A-BLK	GCP	PLR		M	R									9				13							20	SALEABLE		N/A	N/A	N/A	N/A
KEY A, BLACK, W/O CPA	33472-2297	A-BLK	GCP	PLR		M	R		2						8	9				13							20	SALEABLE		N/A	N/A	N/A	N/A
KEY A, BLACK, W/O CPA	33472-2298	A-BLK	GCP	PLR		M	R									9				13	14	15	16	17	18	19	20	SALEABLE		N/A	N/A	N/A	N/A
KEY A, BLACK, W/O CPA	33472-2299	A-BLK	GCP	PLR		M	R		2						8	9				13	14	15	16	17	18	19	20	SALEABLE		N/A	N/A	N/A	N/A
KEY A, BLACK, W/O CPA	33472-2300	A-BLK	GCP	PLR		M	R	1	2	3	4	5	6	7	8	9				13							20	SALEABLE		N/A	N/A	N/A	N/A

molex

MX150 RECEPTACLE 2X10 SEALED ASSEMBLY MAT SEAL
BOM AND PIN OUT SHEET

ASSEMBLY DESCRIPTION	ASSEMBLY PART NUMBER	COMPONENT						BLOCKED TERMINALS																				STATUS	COMMENTS	OPTIONAL ATTATCHMENTS SOLD SEPERATELY			
		THE PRESENCE OF AN ABBREVIATION INDICATES THE PRESENCE OF THAT COMPONENT.						CAVITY WITH A NUMBER INDICATES BLOCKED TERMINAL POSITION CAVITY WITHOUT A NUMBER INDICATES OPEN TERMINAL POSITION																									
		HOUSING KEY/COLOR	GROMMET CAP	PLR	CPA	MAT SEAL	RING SEAL	1	2	3	4	5	6	7	8	9	10	11	12	13	14	15	16	17	18	19	20			BACKSHELL WITH RIBS	BACKSHELL WITHOUT RIBS	90˚ ADAPTOR WITH RIBS	90˚ ADAPTOR WITHOUT RIBS
KEY A, BLACK, W/O CPA	33472-2301	A-BLK	GCP	PLR		M	R	1	2	3	4	5	6	7	8	9				13	14	15	16	17	18	19	20	SALEABLE		N/A	N/A	N/A	N/A
KEY A, BLACK, W/O CPA	33472-2302	A-BLK	GCP	PLR		M	R	1	2	3	4			7	8	9			12	13	14			17	18	19	20	SALEABLE		N/A	N/A	N/A	N/A
KEY A, BLACK, W/O CPA	33472-2303	A-BLK	GCP	PLR		M	R	1	2	3				7	8	9			12	13				17	18	19	20	SALEABLE		N/A	N/A	N/A	N/A
KEY A, BLACK, W/O CPA	33472-2304	A-BLK	GCP	PLR		M	R		2	3	4	5	6	7	8	9	10	11	12		14	15	16	17	18	19		SALEABLE		N/A	N/A	N/A	N/A
KEY A, BLACK, W/O CPA	33472-2305	A-BLK	GCP	PLR		M	R		2	3	4			7	8	9			12		14			17	18	19		SALEABLE		N/A	N/A	N/A	N/A
KEY A, BLACK, W/O CPA	33472-2306	A-BLK	GCP	PLR		M	R		2	3				7	8	9			12					17	18	19		SALEABLE		N/A	N/A	N/A	N/A
KEY A, BLACK, W/O CPA	33472-2307	A-BLK	GCP	PLR		M	R	1		3						9			12	13							20	SALEABLE		N/A	N/A	N/A	N/A
KEY A, BLACK, W/O CPA	33472-2308	A-BLK	GCP	PLR		M	R			3	4					9			12		14							SALEABLE		N/A	N/A	N/A	N/A
KEY A, BLACK, W/O CPA	33472-2309	A-BLK	GCP	PLR		M	R			3						9			12									SALEABLE		N/A	N/A	N/A	N/A
KEY A, BLACK, W/O CPA	33472-2310	A-BLK	GCP	PLR		M	R	1		3	4					9			12	13	14						20	SALEABLE		N/A	N/A	N/A	N/A
KEY A, BLACK, W/O CPA	33472-2311	A-BLK	GCP	PLR		M	R	1	2	3	4	5	6	7	8	9	10							17				SALEABLE		N/A	N/A	N/A	N/A
KEY A, BLACK, W/O CPA	33472-2312	A-BLK	GCP	PLR		M	R	1	2	3	4	5	6	7	8	9	10				14	15		17				SALEABLE		N/A	N/A	N/A	N/A
KEY A, BLACK, W/CPA	33472-2313	A-BLK	GCP	PLR	CPA	M	R																		18			SALEABLE		N/A	N/A	N/A	N/A
KEY A, BLACK, W/CPA	33472-2314	A-BLK	GCP	PLR	CPA	M	R		2		4	5	6		8	9	10				14				18	19	20	SALEABLE		N/A	N/A	N/A	N/A
KEY A, BLACK, W/CPA	33472-2315	A-BLK	GCP	PLR	CPA	M	R		2			5	6			9	10									19	20	SALEABLE		N/A	N/A	N/A	N/A
KEY A, BLACK, W/CPA	33472-2316	A-BLK	GCP	PLR	CPA	M	R	1		3			6			9	10		12	13								SALEABLE		N/A	N/A	N/A	N/A
KEY B, LIGHT GRAY, W/O CPA	33472-2317	B-LG	GCP	PLR		M	R		2	3					8	9		11	12	13						19		SALEABLE		N/A	N/A	N/A	N/A
KEY B, LIGHT GRAY, W/O CPA	33472-2318	B-LG	GCP	PLR		M	R		2	3					8	9		11	12	13					18	19		SALEABLE		N/A	N/A	N/A	N/A
KEY A, BLACK, W/O CPA	33472-2319	A-BLK	GCP	PLR		M	R	1		3	4	5		7	8	9	10	11	12	13	14	15	16	17	18	19		SALEABLE		N/A	N/A	N/A	N/A
KEY B, LIGHT GRAY, W/O CPA	33472-2320	B-LG	GCP	PLR		M	R				4									13			16					SALEABLE		N/A	N/A	N/A	N/A
KEY A, BLACK, W/O CPA	33472-2321	A-BLK	GCP	PLR		M	R					5	6													19		SALEABLE		N/A	N/A	N/A	N/A
KEY A, BLACK, W/O CPA	33472-2322	A-BLK	GCP	PLR		M	R			3	4			7			10						16	17				SALEABLE		N/A	N/A	N/A	N/A
KEY B, LIGHT GRAY, W/O CPA	33472-2323	B-LG	GCP	PLR		M	R		2		4				8	9		11			14					19	20	SALEABLE		N/A	N/A	N/A	N/A
KEY B, LIGHT GRAY, W/O CPA	33472-2324	B-LG	GCP	PLR		M	R		2		4				8	9					14					19	20	SALEABLE		N/A	N/A	N/A	N/A
KEY B, LIGHT GRAY, W/O CPA	33472-2325	B-LG	GCP	PLR		M	R		2		4				8	9					14				18	19	20	SALEABLE		N/A	N/A	N/A	N/A
KEY B, LIGHT GRAY, W/O CPA	33472-2326	B-LG	GCP	PLR		M	R		2		4				8	9		11			14				18	19	20	SALEABLE		N/A	N/A	N/A	N/A
KEY B, LIGHT GRAY, W/O CPA	33472-2327	B-LG	GCP	PLR		M	R	1	2	3	4				8	9	10				14				18	19	20	SALEABLE		N/A	N/A	N/A	N/A
KEY B, LIGHT GRAY, W/O CPA	33472-2328	B-LG	GCP	PLR		M	R		2		4					9					14				18	19	20	SALEABLE		N/A	N/A	N/A	N/A
KEY B, LIGHT GRAY, W/O CPA	33472-2329	B-LG	GCP	PLR		M	R		2		4					9					14					19	20	SALEABLE		N/A	N/A	N/A	N/A
KEY B, LIGHT GRAY, W/O CPA	33472-2330	B-LG	GCP	PLR		M	R		2	3	4					9	10								18	19	20	SALEABLE		N/A	N/A	N/A	N/A
KEY B, LIGHT GRAY, W/O CPA	33472-2331	B-LG	GCP	PLR		M	R		2	3	4					9	10									19	20	SALEABLE		N/A	N/A	N/A	N/A
KEY A, BLACK, W/CPA	33472-2332	A-BLK	GCP	PLR	CPA	M	R						6			9	10											SALEABLE		N/A	N/A	N/A	N/A
KEY A, BLACK, W/O CPA	33472-2333	A-BLK	GCP	PLR		M	R		2	3		5	6						12	13								SALEABLE		N/A	N/A	N/A	N/A
KEY A, BLACK, W/O CPA	33472-2334	A-BLK	GCP	PLR		M	R				4	5	6	7	8	9	10	11	12	13	14	15						SALEABLE		N/A	N/A	N/A	N/A
KEY A, BLACK, W/O CPA	33472-2335	A-BLK	GCP	PLR		M	R					5	6	7	8			11	12	13	14	15						SALEABLE		N/A	N/A	N/A	N/A
KEY A, BLACK, W/O CPA	33472-2336	A-BLK	GCP	PLR		M	R					5	6	7	8			11	12									SALEABLE		N/A	N/A	N/A	N/A
KEY A, BLACK, W/O CPA	33472-2337	A-BLK	GCP	PLR		M	R					5	6	7	8			11	12			15						SALEABLE		N/A	N/A	N/A	N/A
KEY A, BLACK, W/O CPA	33472-2338	A-BLK	GCP	PLR		M	R	1		3	4	5														19		SALEABLE		N/A	N/A	N/A	N/A
KEY A, BLACK, W/O CPA	33472-2339	A-BLK	GCP	PLR		M	R		2				6														20	SALEABLE		N/A	N/A	N/A	N/A
KEY A, BLACK, W/O CPA	33472-2340	A-BLK	GCP	PLR		M	R	1	2	3	4	5	6	7	8		10	11			14			17	18	19		SALEABLE		N/A	N/A	N/A	N/A
KEY B, LIGHT GRAY, W/O CPA	33472-2341	B-LG	GCP	PLR		M	R				4			7	8	9	10	11	12	13								SALEABLE		N/A	N/A	N/A	N/A
KEY B, LIGHT GRAY, W/O CPA	33472-2342	B-LG	GCP	PLR		M	R																16					SALEABLE		N/A	N/A	N/A	N/A
KEY A, BLACK, W/O CPA	33472-2343	A-BLK	GCP	PLR		M	R	1				5	6				10	11								19	20	SALEABLE		N/A	N/A	N/A	N/A
KEY A, BLACK, W/CPA	33472-2344	A-BLK	GCP	PLR	CPA	M	R		2				6				10					15						SALEABLE		N/A	N/A	N/A	N/A
KEY A, BLACK, W/O CPA	33472-2345	A-BLK	GCP	PLR		M	R					5	6	7	8	9		11	12	13				17	18			SALEABLE		N/A	N/A	N/A	N/A
KEY A, BLACK, W/O CPA	33472-2346	A-BLK	GCP	PLR		M	R		2	3	4	5	6	7	8	9		11		13	14					19	20	SALEABLE		N/A	N/A	N/A	N/A
KEY A, BLACK, W/O CPA	33472-2347	A-BLK	GCP	PLR		M	R		2	3	4	5	6	7	8	9		11			14					19	20	SALEABLE		N/A	N/A	N/A	N/A
KEY A, BLACK, W/O CPA	33472-2348	A-BLK	GCP	PLR		M	R					5	6	7	8	9												SALEABLE		N/A	N/A	N/A	N/A
KEY A, BLACK, W/O CPA	33472-2349	A-BLK	GCP	PLR		M	R	1	2	3	4		6	7	8	9	10		12	13	14	15	16	17			20	SALEABLE		N/A	N/A	N/A	N/A
KEY A, BLACK, W/O CPA	33472-2350	A-BLK	GCP	PLR		M	R			3	4	5													18	19		SALEABLE		N/A	N/A	N/A	N/A
KEY A, BLACK, W/O CPA	33472-2351	A-BLK	GCP	PLR		M	R			3	4		6	7	8	9	10		12	13	14	15	16	17			20	SALEABLE		N/A	N/A	N/A	N/A
KEY A, BLACK, W/O CPA	33472-2352	A-BLK	GCP	PLR		M	R			3	4		6		8	9			12	13	14	15	16	17				SALEABLE		N/A	N/A	N/A	N/A
KEY A, BLACK, W/O CPA	33472-2353	A-BLK	GCP	PLR		M	R			3	4	5	6												18	19		SALEABLE		N/A	N/A	N/A	N/A
KEY A, BLACK, W/O CPA	33472-2354	A-BLK	GCP	PLR		M	R			3	4	5		7			10								18	19	20	SALEABLE		N/A	N/A	N/A	N/A
KEY B, LIGHT GRAY, W/O CPA	33472-2355	B-LG	GCP	PLR		M	R																			19	20	SALEABLE		N/A	N/A	N/A	N/A
KEY B, LIGHT GRAY, W/O CPA	33472-2356	B-LG	GCP	PLR		M	R																	17	18	19	20	SALEABLE		N/A	N/A	N/A	N/A
KEY B, LIGHT GRAY, W/O CPA	33472-2357	B-LG	GCP	PLR		M	R																		18	19	20	SALEABLE		N/A	N/A	N/A	N/A
KEY B, LIGHT GRAY, W/O CPA	33472-2358	B-LG	GCP	PLR		M	R											11		13							20	SALEABLE		N/A	N/A	N/A	N/A
KEY A, BLACK, W/O CPA	33472-2359	A-BLK	GCP	PLR		M	R																			19	20	SALEABLE		N/A	N/A	N/A	N/A
KEY B, LIGHT GRAY, W/O CPA	33472-2360	B-LG	GCP	PLR		M	R																				20	SALEABLE		N/A	N/A	N/A	N/A
KEY B, LIGHT GRAY, W/O CPA	33472-2361	B-LG	GCP	PLR		M	R																	17	18		20	SALEABLE		N/A	N/A	N/A	N/A
KEY B, LIGHT GRAY, W/O CPA	33472-2362	B-LG	GCP	PLR		M	R															15				19	20	SALEABLE		N/A	N/A	N/A	N/A
KEY B, LIGHT GRAY, W/O CPA	33472-2363	B-LG	GCP	PLR		M	R										10	11	12	13			16	17	18	19	20	SALEABLE		N/A	N/A	N/A	N/A
KEY B, LIGHT GRAY, W/O CPA	33472-2364	B-LG	GCP	PLR		M	R																16	17	18	19	20	SALEABLE		N/A	N/A	N/A	N/A
KEY B, LIGHT GRAY, W/O CPA	33472-2365	B-LG	GCP	PLR		M	R		2									11	12	13	14	15	16	17	18	19	20	SALEABLE		N/A	N/A	N/A	N/A
KEY B, LIGHT GRAY, W/CPA	33472-2366	B-LG	GCP	PLR	CPA	M	R				4									13			16					SALEABLE		N/A	N/A	N/A	N/A
KEY B, LIGHT GRAY, W/CPA	33472-2367	B-LG	GCP	PLR	CPA	M	R				4			7	8	9	10	11	12	13								SALEABLE		N/A	N/A	N/A	N/A
KEY B, LIGHT GRAY, W/CPA	33472-2368	B-LG	GCP	PLR	CPA	M	R																16					SALEABLE		N/A	N/A	N/A	N/A
KEY B, LIGHT GRAY, W/O CPA	33472-2369	B-LG	GCP	PLR		M	R			3								11			14			17		19		SALEABLE		N/A	N/A	N/A	N/A
KEY A, BLACK, WITH CLIPSLOT, W/O CPA	33472-2501	A-BLK-CLIP	GCO	PLR		M	R																					SALEABLE		34951-2011	34951-2021	34951-1631	34951-1641
KEY B, LIGHT GRAY, WITH CLIPSLOT, W/O CPA	33472-2502	B-LG-CLIP	GCO	PLR		M	R																					SALEABLE		34951-2011	34951-2021	34951-1631	34951-1641
KEY C, DARK GRAY, WITH CLIPSLOT, W/O CPA	33472-2503	C-DG-CLIP	GCO	PLR		M	R																					SALEABLE		34951-2011	34951-2021	34951-1631	34951-1641
KEY D, STONE GRAY, WITH CLIPSLOT, W/O CPA	33472-2504	D-SG-CLIP	GCO	PLR		M	R																					SALEABLE		34951-2011	34951-2021	34951-1631	34951-1641
KEY A, YELLOW, WITH CLIPSLOT, W/O CPA	33472-2505	A-YW-CLIP	GCO	PLR		M	R																					SALEABLE		34951-2011	34951-2021	34951-1631	34951-1641
KEY A, BLACK, WITH CLIPSLOT, W/CPA	33472-2506	A-BLK-CLIP	GCO	PLR	CPA	M	R																					SALEABLE		34951-2011	34951-2021	34951-1631	34951-1641
KEY B, LIGHT GRAY, WITH CLIPSLOT, W/CPA	33472-2507	B-LG-CLIP	GCO	PLR	CPA	M	R																					SALEABLE		34951-2011	34951-2021	34951-1631	34951-1641
KEY C, DARK GRAY, WITH CLIPSLOT, W/CPA	33472-2508	C-DG-CLIP	GCO	PLR	CPA	M	R																					SALEABLE		34951-2011	34951-2021	34951-1631	34951-1641
KEY D, STONE GRAY, WITH CLIPSLOT, W/CPA	33472-2509	D-SG-CLIP	GCO	PLR	CPA	M	R																					SALEABLE		34951-2011	34951-2021	34951-1631	34951-1641
KEY A, YELLOW, WITH CLIPSLOT, W/CPA	33472-2510	A-YW-CLIP	GCO	PLR	CPA	M	R																					SALEABLE		34951-2011	34951-2021	34951-1631	34951-1641
KEY A, BLACK, WITH CLIPSLOT, W/O CPA	33472-2511	A-BLK-CLIP	GCP	PLR		M	R					5	6	7	8			11	12			15						SALEABLE		34951-2011	34951-2021	34951-1631	34951-1641
KEY A, BLACK, WITH CLIPSLOT, W/O CPA	33472-2512	A-BLK-CLIP	GCP	PLR		M	R					5	6	7	8			11	12									SALEABLE		34951-2011	34951-2021	34951-1631	34951-1641
KEY A, BLACK, WITH CLIPSLOT, W/O CPA	33472-2513	A-BLK-CLIP	GCP	PLR		M	R				4	5	6	7	8	9	10	11	12	13	14	15						SALEABLE		34951-2011	34951-2021	34951-1631	34951-1641
KEY A, BLACK, WITH CLIPSLOT, W/O CPA	33472-2514	A-BLK-CLIP	GCP	PLR		M	R					5	6	7	8			11	12	13	14	15						SALEABLE		34951-2011	34951-2021	34951-1631	34951-1641
KEY A, BLACK, WITH CLIPSLOT, W/O CPA	33472-2515	A-BLK-CLIP	GCP	PLR		M	R				4	5	6	7		9	10	11	12	13	14	15			18	19		SALEABLE		34951-2011	34951-2021	34951-1631	34951-1641
KEY A, BLACK, WITH CLIPSLOT, W/O CPA	33472-2516	A-BLK-CLIP	GCP	PLR		M	R				4	5	6	7		9	10								18	19		SALEABLE		34951-2011	34951-2021	34951-1631	34951-1641
KEY A, BLACK, WITH CLIPSLOT, W/O CPA	33472-2517	A-BLK-CLIP	GCP	PLR		M	R					5	6	7				11	12	13	14	15			18	19		SALEABLE		34951-2011	34951-2021	34951-1631	34951-1641
KEY A, BLACK, WITH CLIPSLOT, W/O CPA	33472-2518	A-BLK-CLIP	GCP	PLR		M	R					5	6	7	8													SALEABLE		34951-2011	34951-2021	34951-1631	34951-1641
KEY A, BLACK, WITH CLIPSLOT, W/O CPA	33472-2519	A-BLK-CLIP	GCP	PLR		M	R				4	5	6	7		9	10	11	12						18	19		SALEABLE		34951-2011	34951-2021	34951-1631	34951-1641
KEY A, BLACK, WITH CLIPSLOT, W/O CPA	33472-2520	A-BLK-CLIP	GCP	PLR		M	R					5	6	7				11	12						18	19		SALEABLE		34951-2011	34951-2021	34951-1631	34951-1641
KEY A, BLACK, WITH CLIPSLOT, W/O CPA	33472-2521	A-BLK-CLIP	GCP	PLR		M	R				4	5	6	7	8	9	10	11	12	13	14	15			18	19		SALEABLE		34951-2011	34951-2021	34951-1631	34951-1641
KEY A, BLACK, WITH CLIPSLOT, W/O CPA	33472-2522	A-BLK-CLIP	GCP	PLR		M	R				4	5	6	7	8	9	10			13	14	15			18	19		SALEABLE		34951-2011	34951-2021	34951-1631	34951-1641
KEY A, BLACK, WITH CLIPSLOT, W/O CPA	33472-2523	A-BLK-CLIP	GCP	PLR		M	R					5	6	7	8			11	12	13	14	15			18	19		SALEABLE		34951-2011	34951-2021	34951-1631	34951-1641
KEY A, BLACK, WITH CLIPSLOT, W/O CPA	33472-2524	A-BLK-CLIP	GCP	PLR		M	R					5	6	7	8					13	14	15			18	19		SALEABLE		34951-2011	34951-2021	34951-1631	34951-1641
KEY A, BLACK, WITH CLIPSLOT, W/O CPA	33472-2525	A-BLK-CLIP	GCP	PLR		M	R				4	5	6	7	8	9	10	11	12						18	19		SALEABLE		34951-2011	34951-2021	34951-1631	34951-1641
KEY A, BLACK, WITH CLIPSLOT, W/O CPA	33472-2526	A-BLK-CLIP	GCP	PLR		M	R				4	5	6	7	8	9	10								18	19		SALEABLE		34951-2011	34951-2021	34951-1631	34951-1641
KEY A, BLACK, WITH CLIPSLOT, W/O CPA	33472-2527	A-BLK-CLIP	GCP	PLR		M	R					5	6	7	8			11	12						18	19		SALEABLE		34951-2011	34951-2021	34951-1631	34951-1641
KEY A, BLACK, WITH CLIPSLOT, W/O CPA	33472-2528	A-BLK-CLIP	GCP	PLR		M	R					5	6	7	8										18	19		SALEABLE		34951-2011	34951-2021	34951-1631	34951-1641
KEY A, BLACK, WITH CLIPSLOT, W/O CPA	33472-2529	A-BLK-CLIP	GCP	PLR		M	R				4			7	8	9	10	11	12	13	14				18	19		SALEABLE		34951-2011	34951-2021	34951-1631	34951-1641
KEY A, BLACK, WITH CLIPSLOT, W/O CPA	33472-2530	A-BLK-CLIP	GCP	PLR		M	R				4			7	8	9	10			13	14				18	19		SALEABLE		34951-2011	34951-2021	34951-1631	34951-1641
KEY A, BLACK, WITH CLIPSLOT, W/O CPA	33472-2531	A-BLK-CLIP	GCP	PLR		M	R							7	8			11	12	13	14				18	19		SALEABLE		34951-2011	34951-2021	34951-1631	34951-1641
KEY A, BLACK, WITH CLIPSLOT, W/O CPA	33472-2532	A-BLK-CLIP	GCP	PLR		M	R							7	8					13	14				18	19		SALEABLE		34951-2011	34951-2021	34951-1631	34951-1641
KEY A, BLACK, WITH CLIPSLOT, W/O CPA	33472-2533	A-BLK-CLIP	GCP	PLR		M	R					5	6	7											18	19		SALEABLE		34951-2011	34951-2021	34951-1631	34951-1641
KEY A, BLACK, WITH CLIPSLOT, W/O CPA	33472-2534	A-BLK-CLIP	GCP	PLR		M	R				4	5	6	7	8	9	10	11	12			15						SALEABLE		34951-2011	34951-2021	34951-1631	34951-1641
KEY A, BLACK, WITH CLIPSLOT, W/O CPA	33472-2535	A-BLK-CLIP	GCP	PLR		M	R				4	5	6	7	8	9	10	11	12			15			18	19		SALEABLE		34951-2011	34951-2021	34951-1631	34951-1641
KEY A, BLACK, WITH CLIPSLOT, W/O CPA	33472-2536	A-BLK-CLIP	GCP	PLR		M	R				4	5	6	7	8	9	10					15			18	19		SALEABLE		34951-2011	34951-2021	34951-1631	34951-1641
KEY A, BLACK, WITH CLIPSLOT, W/O CPA	33472-2537	A-BLK-CLIP	GCP	PLR		M	R					5	6	7	8			11	12			15			18	19		SALEABLE		34951-2011	34951-2021	34951-1631	34951-1641
KEY A, BLACK, WITH CLIPSLOT, W/O CPA	33472-2538	A-BLK-CLIP	GCP	PLR		M	R					5	6	7	8							15			18	19		SALEABLE		34951-2011	34951-2021	34951-1631	34951-1641
KEY A, BLACK, WITH CLIPSLOT, W/O CPA	33472-2539	A-BLK-CLIP	GCP	PLR		M	R				4	5	6	7	8	9	10	11	12									SALEABLE		34951-2011	34951-2021	34951-1631	34951-1641
KEY A, BLACK, W/O CPA	33472-2540	A-BLK	GCP	PLR		M	R						6											17	18	19	20	SALEABLE		N/A	N/A	N/A	N/A
KEY A, BLACK, W/O CPA	33472-2541	A-BLK	GCP	PLR		M	R		2				6	7			10							17	18	19	20	SALEABLE		N/A	N/A	N/A	N/A

molex

MX150 RECEPTACLE 2X10 SEALED ASSEMBLY MAT SEAL
BOM AND PIN OUT SHEET

ASSEMBLY DESCRIPTION	ASSEMBLY PART NUMBER	COMPONENT						BLOCKED TERMINALS																				STATUS	COMMENTS	OPTIONAL ATTATCHMENTS SOLD SEPERATELY			
		THE PRESENCE OF AN ABBREVIATION INDICATES THE PRESENCE OF THAT COMPONENT.						CAVITY WITH A NUMBER INDICATES BLOCKED TERMINAL POSITION CAVITY WITHOUT A NUMBER INDICATES OPEN TERMINAL POSITION																									
		HOUSING KEY/COLOR	GROMMET CAP	PLR	CPA	MAT SEAL	RING SEAL	1	2	3	4	5	6	7	8	9	10	11	12	13	14	15	16	17	18	19	20			BACKSHELL WITH RIBS	BACKSHELL WITHOUT RIBS	90˚ ADAPTOR WITH RIBS	90˚ ADAPTOR WITHOUT RIBS
KEY A, BLACK, W/O CPA	33472-2542	A-BLK	GCP	PLR		M	R		2	3			6	7			10	11						17	18	19	20	SALEABLE		N/A	N/A	N/A	N/A
KEY A, BLACK, W/O CPA	33472-2543	A-BLK	GCP	PLR		M	R	1	2				6	7	8		10							17	18	19	20	SALEABLE		N/A	N/A	N/A	N/A
KEY A, BLACK, W/O CPA	33472-2544	A-BLK	GCP	PLR		M	R	1	2	3			6	7	8		10	11						17	18	19	20	SALEABLE		N/A	N/A	N/A	N/A
KEY A, BLACK, W/O CPA	33472-2545	A-BLK	GCP	PLR		M	R			3								11						17	18	19	20	SALEABLE		N/A	N/A	N/A	N/A
KEY A, BLACK, W/O CPA	33472-2546	A-BLK	GCP	PLR		M	R	1		3					8			11						17	18	19	20	SALEABLE		N/A	N/A	N/A	N/A
KEY A, BLACK, W/O CPA	33472-2547	A-BLK	GCP	PLR		M	R	1	2	3				7	8		10	11						17	18	19	20	SALEABLE		N/A	N/A	N/A	N/A
KEY A, BLACK, W/O CPA	33472-2548	A-BLK	GCP	PLR		M	R			3			6						12	13								SALEABLE		N/A	N/A	N/A	N/A
KEY A, BLACK, W/O CPA	33472-2549	A-BLK	GCP	PLR		M	R	1		3		5	6	7				11	12	13								SALEABLE		N/A	N/A	N/A	N/A
KEY A, BLACK, W/O CPA	33472-2550	A-BLK	GCP	PLR		M	R			3		5	6					11	12	13								SALEABLE		N/A	N/A	N/A	N/A
KEY A, BLACK, W/O CPA	33472-2551	A-BLK	GCP	PLR		M	R					5			8			11			14		16	17		19	20	SALEABLE		N/A	N/A	N/A	N/A
KEY A, BLACK, W/O CPA	33472-2552	A-BLK	GCP	PLR		M	R		2	3			6		8				12	13								SALEABLE		N/A	N/A	N/A	N/A
KEY A, BLACK, W/O CPA	33472-2553	A-BLK	GCP	PLR		M	R	1	2	3		5	6	7	8			11	12	13								SALEABLE		N/A	N/A	N/A	N/A
KEY A, BLACK, W/O CPA	33472-2554	A-BLK	GCP	PLR		M	R		2	3		5	6		8			11	12	13								SALEABLE		N/A	N/A	N/A	N/A
KEY A, BLACK, W/O CPA	33472-2555	A-BLK	GCP	PLR		M	R	1								9	10	11	12								20	SALEABLE		N/A	N/A	N/A	N/A
KEY A, BLACK, W/O CPA	33472-2556	A-BLK	GCP	PLR		M	R	1		3	4					9	10	11	12								20	SALEABLE		N/A	N/A	N/A	N/A
KEY A, BLACK, W/O CPA	33472-2557	A-BLK	GCP	PLR		M	R	1		3	4	5	6	7	8	9	10	11	12								20	SALEABLE		N/A	N/A	N/A	N/A
KEY A, BLACK, W/CPA	33472-2558	A-BLK	GCP	PLR	CPA	M	R					5				9			12			15	16		18	19	20	SALEABLE		N/A	N/A	N/A	N/A
KEY B, LIGHT GRAY, W/CPA	33472-2559	B-LG	GCP	PLR	CPA	M	R					5	6	7	8	9	10	11	12	13	14			17	18	19	20	SALEABLE		N/A	N/A	N/A	N/A
KEY B, LIGHT GRAY, W/CPA	33472-2560	B-LG	GCP	PLR	CPA	M	R	1	2	3	4	5	6	7	8					13			16			19	20	SALEABLE		N/A	N/A	N/A	N/A
KEY A, BLACK, W/O CPA	33472-2561	A-BLK	GCP	PLR		M	R	1	2	3			6	7			10	11	12				16			19		SALEABLE		N/A	N/A	N/A	N/A
KEY A, BLACK, W/O CPA	33472-2562	A-BLK	GCP	PLR		M	R		2	3			6				10		12									SALEABLE		N/A	N/A	N/A	N/A
KEY A, BLACK, W/O CPA	33472-2563	A-BLK	GCP	PLR		M	R	1	2	3	4	5	6		8		10	11	12	13	14	15	16		18	19	20	SALEABLE		N/A	N/A	N/A	N/A
KEY A, BLACK, W/O CPA	33472-2564	A-BLK	GCP	PLR		M	R	1							8			11									20	SALEABLE		N/A	N/A	N/A	N/A
KEY A, BLACK, W/O CPA	33472-2565	A-BLK	GCP	PLR		M	R	1					6	7	8	9		11									20	SALEABLE		N/A	N/A	N/A	N/A
KEY B, LIGHT GRAY, W/O CPA	33472-2566	B-LG	GCP	PLR		M	R					5	6													19		SALEABLE		N/A	N/A	N/A	N/A
KEY B, LIGHT GRAY, W/O CPA	33472-2567	B-LG	GCP	PLR		M	R			3											14							SALEABLE		N/A	N/A	N/A	N/A
KEY A, BLACK, W/O CPA	33472-2568	A-BLK	GCP	PLR		M	R			3					8												20	SALEABLE		N/A	N/A	N/A	N/A
KEY A, BLACK, W/O CPA	33472-2569	A-BLK	GCP	PLR		M	R									9	10	11	12								20	SALEABLE		N/A	N/A	N/A	N/A
KEY A, BLACK, W/O CPA	33472-2570	A-BLK	GCP	PLR		M	R	1										11								19	20	SALEABLE		N/A	N/A	N/A	N/A
KEY A, BLACK, W/O CPA	33472-2571	A-BLK	GCP	PLR		M	R	1							8	9	10	11	12	13	14	15	16	17	18	19	20	SALEABLE		N/A	N/A	N/A	N/A
KEY A, BLACK, W/O CPA	33472-2572	A-BLK	GCP	PLR		M	R	1					6					11								19	20	SALEABLE		N/A	N/A	N/A	N/A
KEY A, BLACK, W/O CPA	33472-2573	A-BLK	GCP	PLR		M	R	1					6		8	9	10	11	12	13	14	15	16	17	18	19	20	SALEABLE		N/A	N/A	N/A	N/A
KEY A, BLACK, W/O CPA	33472-2574	A-BLK	GCP	PLR		M	R	1							8	9	10		12		14	15	16	17	18	19	20	SALEABLE		N/A	N/A	N/A	N/A
KEY A, BLACK, W/O CPA	33472-2575	A-BLK	GCP	PLR		M	R	1													14	15	16	17	18	19	20	SALEABLE		N/A	N/A	N/A	N/A
KEY A, BLACK, W/O CPA	33472-2576	A-BLK	GCP	PLR		M	R	1					6								14	15	16	17	18	19	20	SALEABLE		N/A	N/A	N/A	N/A
KEY A, BLACK, W/O CPA	33472-2577	A-BLK	GCP	PLR		M	R	1					6		8	9	10		12		14	15	16	17	18	19	20	SALEABLE		N/A	N/A	N/A	N/A
KEY A, BLACK, W/O CPA	33472-2578	A-BLK	GCP	PLR		M	R	1	2	3						9												SALEABLE		N/A	N/A	N/A	N/A
KEY A, BLACK, W/O CPA	33472-2579	A-BLK	GCP	PLR		M	R	1	2	3										13	14	15	16	17	18			SALEABLE		N/A	N/A	N/A	N/A
KEY A, BLACK, W/O CPA	33472-2580	A-BLK	GCP	PLR		M	R			3						9												SALEABLE		N/A	N/A	N/A	N/A
KEY A, BLACK, W/O CPA	33472-2581	A-BLK	GCP	PLR		M	R			3						9				13	14	15	16	17	18			SALEABLE		N/A	N/A	N/A	N/A
KEY A, BLACK, W/O CPA	33472-2582	A-BLK	GCP	PLR		M	R	1		3			6	7	8		10	11						17	18	19	20	SALEABLE		N/A	N/A	N/A	N/A
KEY A, BLACK, W/O CPA	33472-2583	A-BLK	GCP	PLR		M	R	1		3	4	5	6	7	8		10	11	12					17	18	19	20	SALEABLE		N/A	N/A	N/A	N/A
KEY A, BLACK, W/O CPA	33472-2584	A-BLK	GCP	PLR		M	R	1	2	3	4	5	6	7	8		10	11	12					17	18	19	20	SALEABLE		N/A	N/A	N/A	N/A
KEY A, BLACK, W/O CPA	33472-2585	A-BLK	GCP	PLR		M	R	1		3	4	5					10	11	12					17	18	19	20	SALEABLE		N/A	N/A	N/A	N/A
KEY A, BLACK, W/O CPA	33472-2586	A-BLK	GCP	PLR		M	R	1		3	4	5			8		10	11	12					17	18	19	20	SALEABLE		N/A	N/A	N/A	N/A
KEY A, BLACK, W/O CPA	33472-2587	A-BLK	GCP	PLR		M	R	1	2	3	4	5			8		10	11	12					17	18	19	20	SALEABLE		N/A	N/A	N/A	N/A
KEY A, BLACK, W/O CPA	33472-2588	A-BLK	GCP	PLR		M	R	1		3					8		10	11						17	18	19	20	SALEABLE		N/A	N/A	N/A	N/A
KEY A, BLACK, W/O CPA	33472-2589	A-BLK	GCP	PLR		M	R	1	2	3	4	5					10	11	12					17	18	19	20	SALEABLE		N/A	N/A	N/A	N/A
KEY A, BLACK, W/O CPA	33472-2590	A-BLK	GCP	PLR		M	R		2	3	4			7	8				12			15	16	17	18	19	20	SALEABLE		N/A	N/A	N/A	N/A
KEY A, BLACK, W/O CPA	33472-2591	A-BLK	GCP	PLR		M	R					5			8			11			14		16	17				SALEABLE		N/A	N/A	N/A	N/A
KEY A, BLACK, W/O CPA	33472-2592	A-BLK	GCP	PLR		M	R				4		6					11	12	13								SALEABLE		N/A	N/A	N/A	N/A
KEY A, BLACK, W/O CPA	33472-2593	A-BLK	GCP	PLR		M	R		2		4	5				9		11	12	13	14	15	16					SALEABLE		N/A	N/A	N/A	N/A
KEY A, BLACK, W/O CPA	33472-2594	A-BLK	GCP	PLR		M	R			3						9											20	SALEABLE		N/A	N/A	N/A	N/A
KEY A, BLACK, W/O CPA	33472-2595	A-BLK	GCP	PLR		M	R	1	2		4	5					10	11	12					17	18	19	20	SALEABLE		N/A	N/A	N/A	N/A
KEY A, BLACK, W/O CPA	33472-2596	A-BLK	GCP	PLR		M	R	1							8		10	11						17	18	19	20	SALEABLE		N/A	N/A	N/A	N/A
KEY A, BLACK, W/O CPA	33472-2597	A-BLK	GCP	PLR		M	R	1	2		4	5			8		10	11	12					17	18	19	20	SALEABLE		N/A	N/A	N/A	N/A
KEY A, BLACK, W/O CPA	33472-2598	A-BLK	GCP	PLR		M	R	1			4	5			8		10	11	12					17	18	19	20	SALEABLE		N/A	N/A	N/A	N/A
KEY A, BLACK, W/O CPA	33472-2599	A-BLK	GCP	PLR		M	R	1			4	5						11	12					17	18			SALEABLE		N/A	N/A	N/A	N/A
KEY A, BLACK, W/O CPA	33472-2600	A-BLK	GCP	PLR		M	R	1	2		4	5	6	7	8		10	11	12					17	18	19	20	SALEABLE		N/A	N/A	N/A	N/A
KEY A, BLACK, W/O CPA	33472-2601	A-BLK	GCP	PLR		M	R	1	2				6	7	8		10	11						17	18	19	20	SALEABLE		N/A	N/A	N/A	N/A
KEY A, BLACK, W/O CPA	33472-2602	A-BLK	GCP	PLR		M	R	1			4	5	6	7	8		10	11	12					17	18	19	20	SALEABLE		N/A	N/A	N/A	N/A
KEY A, BLACK, W/O CPA	33472-2603	A-BLK	GCP	PLR		M	R	1					6	7	8		10	11						17	18	19	20	SALEABLE		N/A	N/A	N/A	N/A
KEY A, BLACK, W/CPA	33472-2604	A-BLK	GCO	PLR	CPA	M	R								8	9								17	18	19	20	SALEABLE		N/A	N/A	N/A	N/A

TABLE OF CONTENTS

SHEET NO.	SHEET DESCRIPTION
1	NOTES AND BOM
2	CONFIGURATIONS
3-4	KEY CONFIGURATIONS
5	BLADE SEALED ASSEMBLY
6	SYSTEM PACKAGING
7	BACKSHELL NOTES
8	BACKSHELL
9	BACKSHELL CONFIGURATIONS

NOTES: VALID UNLESS OTHERWISE SPECIFIED

1. GENERAL:
a. APPLICATION SPECIFICATION SEE: AS-33472-100
-CONTAINS: PRODUCT INTRODUCTION, PRODUCT SUMMARY, CONNECTOR ASSEMBLY, PACKAGING INFORMATION, CONNECTOR MATING, SERVICE INSTRUCTIONS, ELECTRICAL CONTINUITY CHECKING, CRIMPING, AND TROUBLESHOOTING.
-DESIGNED TO MATE WITH RECEPTACLE SEALED ASSEMBLY AS SPECIFIED IN THE MATING CONNECTOR DRAWINGS CHART.
*DENOTES DRAWINGS THAT CAN BE ACCESSED AT <http://ewcap.uscarteams.org/>.
-ASSEMBLY SHIPPED WITH PLR IN PRE-LOCK POSITION (SEE PLR PRE-LOCK VIEW SHEET 5).

b. PRODUCT SPECIFICATION SEE:
-STANDARD CONFIGURATION: PS-33472-000
-UL V0 CONFIGURATION: TBD
CONTAINS: PRODUCT INTRODUCTION, PRODUCT SUMMARY, RATINGS (CURRENT, TEMPERATURE, SEALING, AND FLAMMABILITY), TERMINALS, WIRE DIAMETER RANGE, PRODUCT VALIDATION, AND PRODUCT DEVIATIONS.
c. PACKAGING SPECIFICATION PER MOLEX DRAWING: PK-31300-635
d. PARTS MUST BE IN COMPLIANCE TO MOLEX CHEMICAL SUBSTANCES FOR PRODUCTS AND PACKAGING SPECIFICATION: QEHS-699000-300
e. DATA MUST BE SUBMITTED UNDER THE MOLEX PART NUMBER TO IMDS (COMPANY ID#13255)

2. DESIGN - MATERIALS:
a. FOR BILL OF MATERIALS SEE:
-STANDARD CONFIGURATION: SD-33482-0002
-UL V0 CONFIGURATION: SD-160084-0002

3. DESIGN - GEOMETRY:
a. THE 3-D CAD DATA IS BASIC (WITHOUT TOLERANCE) AND MASTER FOR THIS PART WITH THE EXCEPTION OF UNDERLINED DIMENSIONS. DIMENSIONAL INFORMATION NOT SHOWN ON THIS DRAWING IS DEFINED BY THE DATA FILE AT ITS LATEST REVISION.
b. GEOMETRIC DIMENSIONS AND TOLERANCES PER ASME Y14.5M-2009
c. EDGES AND UNDIMENSIONED DETAILS PER ISO13715
d. CORNERS SHOWN AS SHARP TO BE R 0.2 MAX.
e. LETTERING SHALL BE 0.15 MAX RAISED IN 0.25 MAX RECESS PAD. THIS INCLUDES RECYCLING CODE, CAVITY ID, VENDOR IDENTIFICATION, AND CUSTOMER MATERIAL NUMBER.
f. VISUAL DEFECTS SHALL MEET COSMETIC STANDARD PS-45499-002 (Class B).
g. LASER MARKING:
1. PART NUMBER
2. DAY OF THE YEAR
3. SHIFT
4. YEAR
FOR ADDITIONAL INFORMATION SEE SECTION 5 UNDER PROCEDURES IN ES-34735-008.

MATING CONNECTOR DRAWINGS

DESCRIPTION	MOLEX INLINE
2X2	SD-33472-0001
2X3	SD-33472-0001
2X4	SD-33472-0001
2X6	SD-33472-0001
2X8	SD-33472-0001
2X10	SD-33472-0001

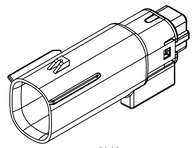
2X2

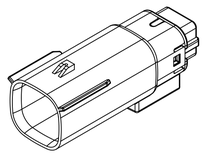
2X3

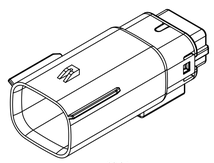
2X4

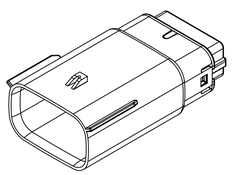
2X6

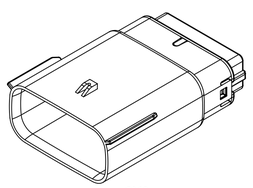
2X8

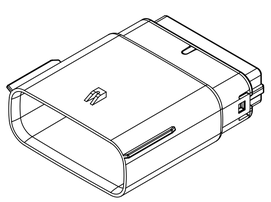
2X10

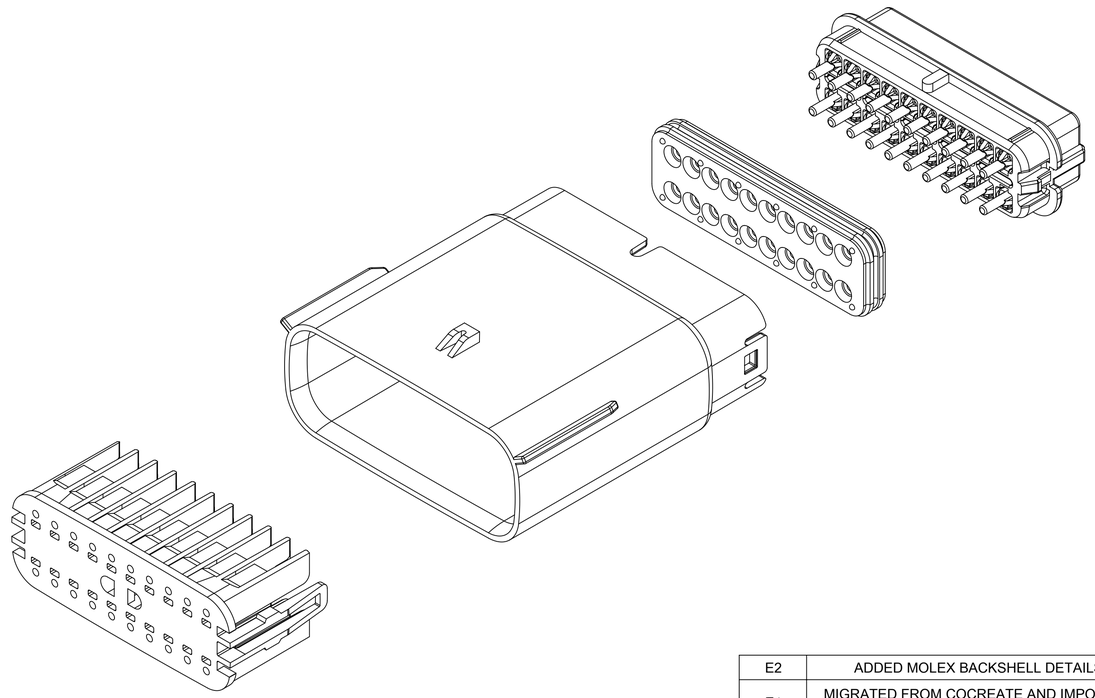

INSPECTION NUMBER LOG
LAST NUMBER: 9 ADDED: REMOVED:

REV	REV DESCRIPTION
E2	ADDED MOLEX BACKSHELL DETAILS
E1	MIGRATED FROM COCREATE AND IMPORTED DXF FILES
E	ADDED CHARTED DIMENSIONS FOR 2X2, 2X4, 2X6 AND 2X8 WITH CLIPSLOT
D	MINOR GEOMETRY CHANGE FOR UL V0
C3	ADD 2X4
C2	ADD 2X3
C1	ADD UL V0 CONFIGURATIONS
C	ADD 2X8
B1	ADD 2X6 BACKSHELL INFO
B	ADD 2X6
A	INITIAL RELEASE

THIS DRAWING CONTAINS INFORMATION THAT IS PROPRIETARY TO MOLEX ELECTRONIC TECHNOLOGIES, LLC AND SHOULD NOT BE USED WITHOUT WRITTEN PERMISSION

SYMBOLS	
= 0	
= 0	
= 0	
= 0	
= 0	
= 0	
= 0	
= 0	
= 0	

DIMENSION UNITS	SCALE
mm	1.5:1

GENERAL TOLERANCES (UNLESS SPECIFIED)		
ANGULAR TOL	±	1.0 °
4 PLACES	±	
3 PLACES	±	
2 PLACES	±	0.1
1 PLACE	±	0.2
0 PLACES	±	

DRAFT WHERE APPLICABLE MUST REMAIN WITHIN DIMENSIONS

CURRENT REV DESC:

EC NO: 171650
DRWN: PMANJUNATHAC 2018/01/03
CHK'D: MVANSLAMBROU 2018/02/16
APPR: MVANSLAMBROU 2018/02/16

INITIAL REVISION:
DRWN: APROFFITT 2014/04/28
APPR: VKOSHY 2014/05/14

THIRD ANGLE PROJECTION | DRAWING: A1-SIZE | SERIES: 33482

molex

MX150 BLADE
DUAL ROW SEALED ASSEMBLY MAT SEAL

PRODUCT CUSTOMER DRAWING

DOCUMENT NUMBER	DOC TYPE	DOC PART	REVISION
SD-33482-0001	PSD	001	E2

MATERIAL NUMBER | CUSTOMER: GENERAL MARKET | SHEET NUMBER: 1 OF 11

DOCUMENT STATUS	P1	RELEASE DATE	2018/02/16 22:02:26

SHEET DESCRIPTION
CONFIGURATIONS

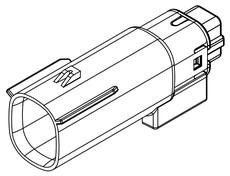

2X2 - STANDARD (STD)

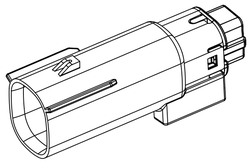

2X2 - UL V0*

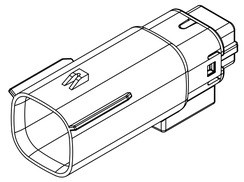

2X3 - STANDARD (STD)

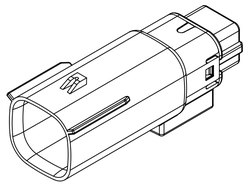

2X3 - LENGTHENED

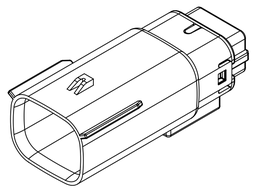

2X4 - STANDARD (STD)

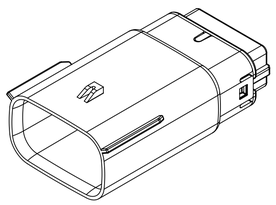

2X6 - STANDARD (STD)

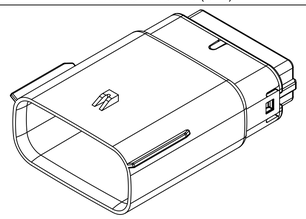

2X8 - STANDARD (STD)

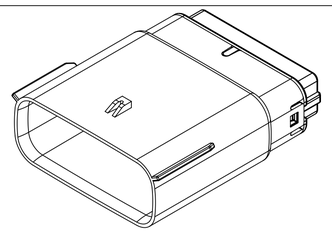

2X10 - STANDARD (STD)

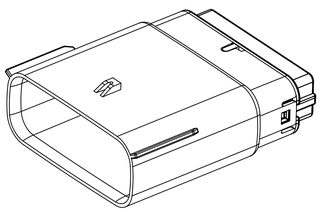

2X10 - UL V0*

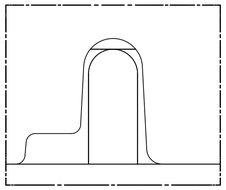

UL V0 UNIQUE FEATURE

Partial1

SCALE 10:1

* MINOR GEOMETRY CHANGE THAN STANDARD CONFIGURATION.

SEE NOTE 2a FOR MORE INFORMATION

DOCUMENT STATUS	P1	RELEASE DATE	2018/02/16 22:02:26

SYMBOLS	
A =	0
C =	0
E =	0
S =	0
▼ =	0
C =	0
☒ =	0
■ =	0
V =	0

THIS DRAWING CONTAINS INFORMATION THAT IS PROPRIETARY TO MOLEX ELECTRONIC TECHNOLOGIES, LLC AND SHOULD NOT BE USED WITHOUT WRITTEN PERMISSION

DIMENSION UNITS	SCALE
mm	1.5:1

GENERAL TOLERANCES (UNLESS SPECIFIED)		
ANGULAR TOL	±	1.0 °
4 PLACES	±	
3 PLACES	±	
2 PLACES	±	0.1
1 PLACE	±	0.2
0 PLACES	±	

DRAFT WHERE APPLICABLE MUST REMAIN WITHIN DIMENSIONS

CURRENT REV DESC:

EC NO: 171650

DRWN: PMANJUNATHAC 2018/01/03

CHK'D: MVANSLAMBROU 2018/02/16

APPR: MVANSLAMBROU 2018/02/16

INITIAL REVISION:

DRWN: APROFFITT 2014/04/28

APPR: VKOSHY 2014/05/14

THIRD ANGLE PROJECTION | DRAWING: A1-SIZE | SERIES: 33482

molex

MX150 BLADE
DUAL ROW SEALED ASSEMBLY MAT SEAL

PRODUCT CUSTOMER DRAWING

DOCUMENT NUMBER	DOC TYPE	DOC PART	REVISION
SD-33482-0001	PSD	001	E2

MATERIAL NUMBER	CUSTOMER	SHEET NUMBER
	GENERAL MARKET	2 OF 11

SHEET DESCRIPTION
KEY CONFIGURATIONS

2X2

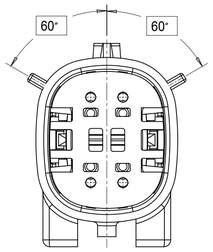

KEY A

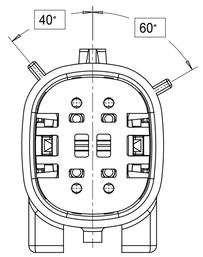

KEY B

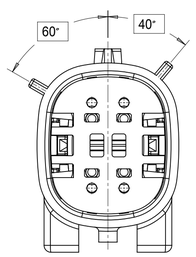

KEY C

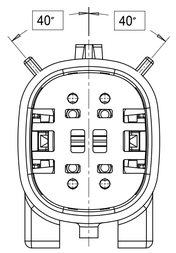

KEY D

2X3

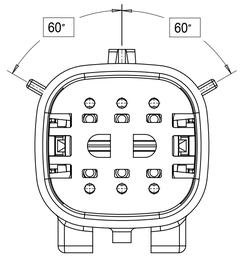

KEY A

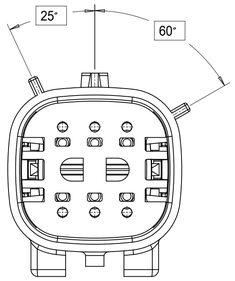

KEY B

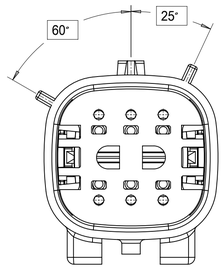

KEY C

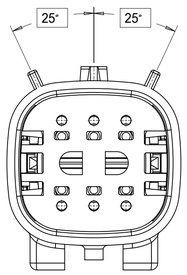

KEY D

2X4

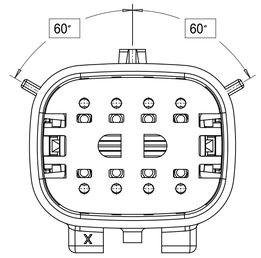

KEY A

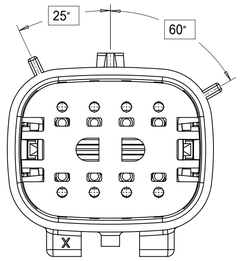

KEY B

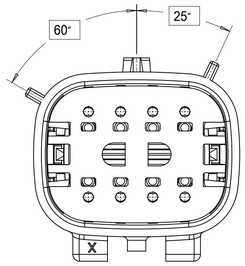

KEY C

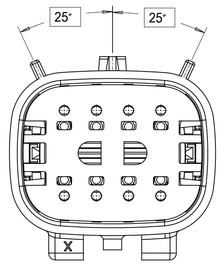

KEY D

SYMBOLS
= 0
= 0
= 0
= 0
= 0
= 0
= 0
= 0
= 0

THIS DRAWING CONTAINS INFORMATION THAT IS PROPRIETARY TO MOLEX ELECTRONIC TECHNOLOGIES, LLC AND SHOULD NOT BE USED WITHOUT WRITTEN PERMISSION

DIMENSION UNITS	SCALE
mm	3:1

GENERAL TOLERANCES (UNLESS SPECIFIED)		
ANGULAR TOL	±	1.0 °
4 PLACES	±	
3 PLACES	±	
2 PLACES	±	0.1
1 PLACE	±	0.2
0 PLACES	±	

DRAFT WHERE APPLICABLE MUST REMAIN WITHIN DIMENSIONS

CURRENT REV DESC:

EC NO: 171650
DRWN: PMANJUNATHAC 2018/01/03
CHK'D: MVANSLAMBROU 2018/02/16
APPR: MVANSLAMBROU 2018/02/16

INITIAL REVISION:
DRWN: APROFFITT 2014/04/28
APPR: VKOSHY 2014/05/14

THIRD ANGLE PROJECTION | DRAWING: A1-SIZE | SERIES: 33482

molex

MX150 BLADE
DUAL ROW SEALED ASSEMBLY MAT SEAL

PRODUCT CUSTOMER DRAWING

DOCUMENT NUMBER	DOC TYPE	DOC PART	REVISION
SD-33482-0001	PSD	001	E2

MATERIAL NUMBER	CUSTOMER	SHEET NUMBER
	GENERAL MARKET	3 OF 11

DOCUMENT STATUS	P1	RELEASE DATE	2018/02/16 22:02:26

COPYRIGHT, creation date unknown
REVISIONS: 1x
DATE: 2017/10/30

SHEET DESCRIPTION
KEY CONFIGURATIONS CONT.

2X6

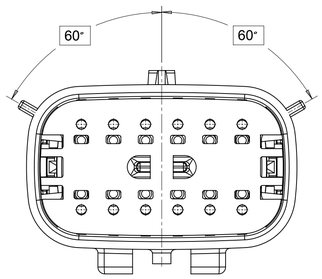

KEY A

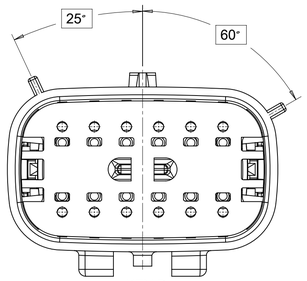

KEY B

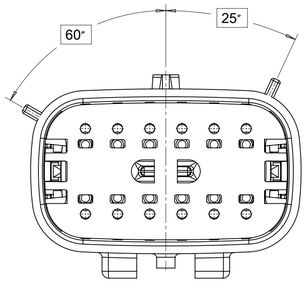

KEY C

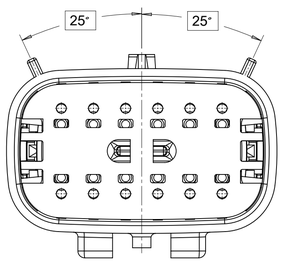

KEY D

2X8

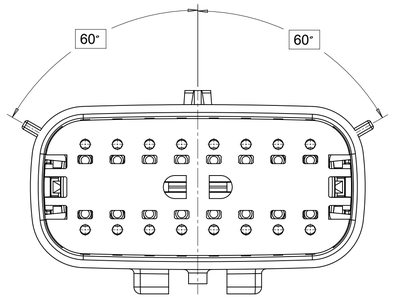

KEY A

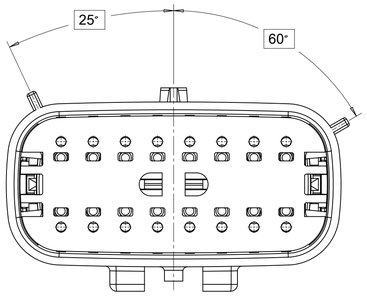

KEY B

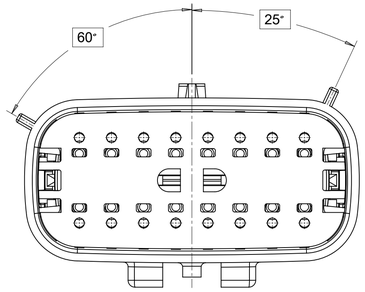

KEY C

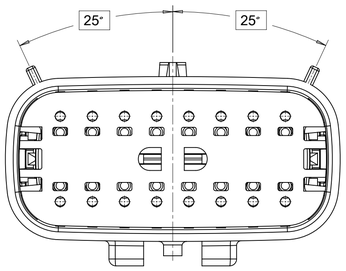

KEY D

2X10

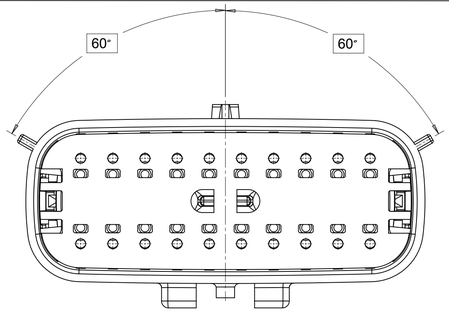

KEY A

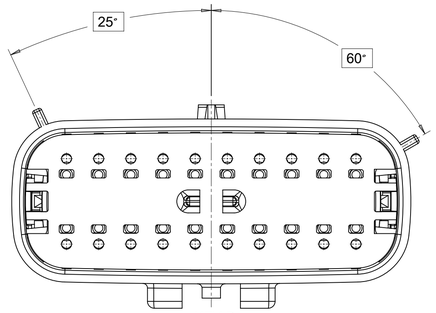

KEY B

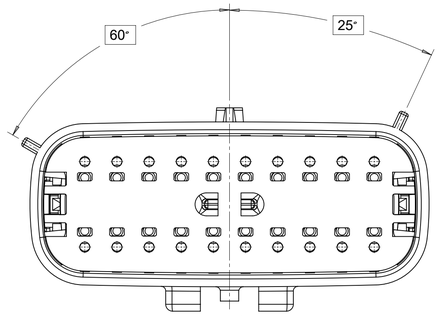

KEY C

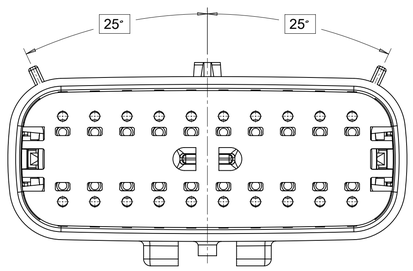

KEY D

SYMBOLS
= 0
= 0
= 0
= 0
= 0
= 0
= 0
= 0
= 0

THIS DRAWING CONTAINS INFORMATION THAT IS PROPRIETARY TO MOLEX ELECTRONIC TECHNOLOGIES, LLC AND SHOULD NOT BE USED WITHOUT WRITTEN PERMISSION

DIMENSION UNITS	SCALE
mm	3:1

GENERAL TOLERANCES (UNLESS SPECIFIED)		
ANGULAR TOL	±	1.0 °
4 PLACES	±	
3 PLACES	±	
2 PLACES	±	0.1
1 PLACE	±	0.2
0 PLACES	±	

DRAFT WHERE APPLICABLE MUST REMAIN WITHIN DIMENSIONS

CURRENT REV DESC:

EC NO: 171650
DRWN: PMANJUNATHAC 2018/01/03
CHK'D: MVANSLAMBROU 2018/02/16
APPR: MVANSLAMBROU 2018/02/16

INITIAL REVISION:
DRWN: APROFFITT 2014/04/28
APPR: VKOSHY 2014/05/14

THIRD ANGLE PROJECTION | DRAWING: A1-SIZE | SERIES: 33482

molex

MX150 BLADE
DUAL ROW SEALED ASSEMBLY MAT SEAL

PRODUCT CUSTOMER DRAWING

DOCUMENT NUMBER	DOC TYPE	DOC PART	REVISION
SD-33482-0001	PSD	001	E2

MATERIAL NUMBER	CUSTOMER	SHEET NUMBER
	GENERAL MARKET	4 OF 11

DOCUMENT STATUS	P1	RELEASE DATE	2018/02/16 22:02:26

COPYRIGHT - creation date (yyyy-m-d) 1
DRAWING No. 33482
DATE: 2017/10/09

SHEET DESCRIPTION
BLADE SEALED ASSEMBLY

CHARTED DIMENSION					
DESCRIPTION	DIMENSIONS				
	A	B	C	D	E
2X2	15.54	1.75	24.40	54.45	22.23
2X3 STANDARD	19.04	3.50	26.21	54.45	22.23
2X3 LENGTHENED	19.04	3.50	26.21	56.45	22.23
2X4	22.54	1.75	27.21	54.45	22.23
2X6	29.54	1.75	32.27	54.45	22.23
2X8	36.54	1.75	38.88	54.45	22.23
2X10	43.64	1.75	45.65	54.45	22.05

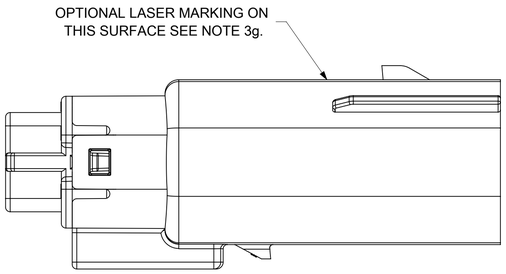

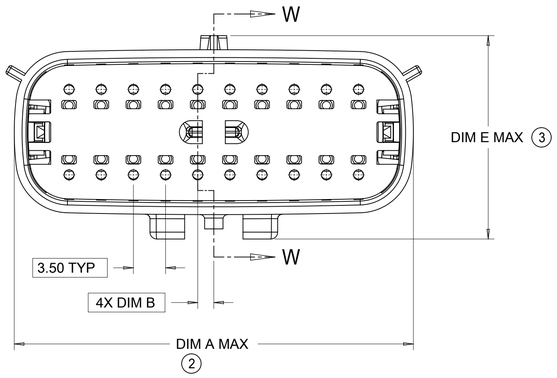

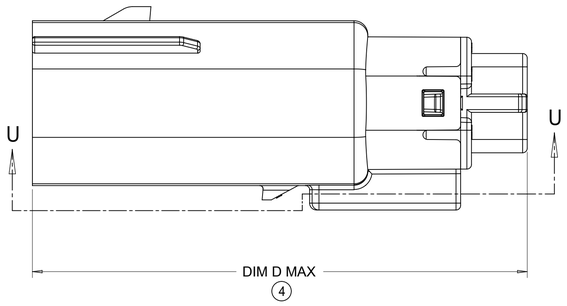

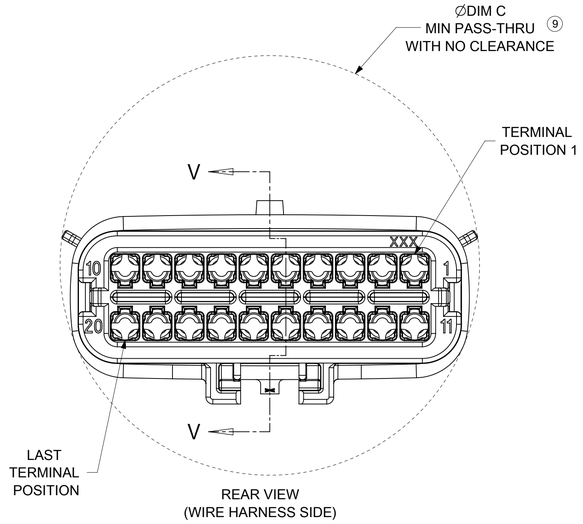

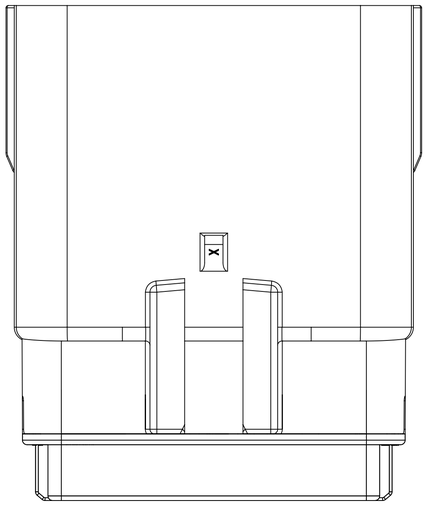

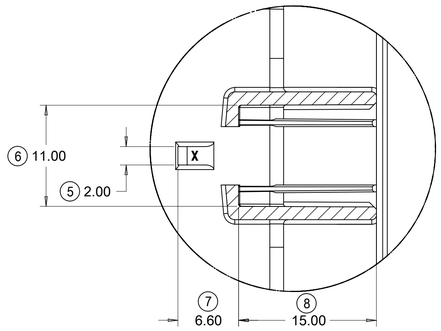

PartialU-U
SCALE 3:1

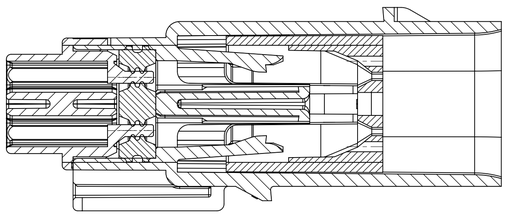

PRIMARY LOCK REINFORCEMENT (PLR) SHOWN
IN PRE-STAGED POSITION

SECTION W-W

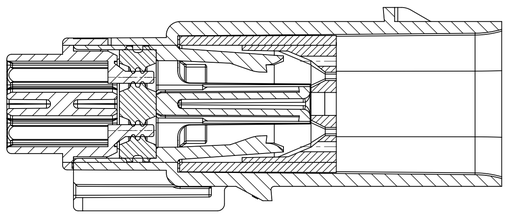

PRIMARY LOCK REINFORCEMENT (PLR) SHOWN
IN FINAL-LOCK POSITION

SECTION V-V

SYMBOLS	
A	= 0
B	= 0
D	= 0
E	= 0
	= 0
C	= 0
	= 0
	= 0
	= 0

THIS DRAWING CONTAINS INFORMATION THAT IS PROPRIETARY TO MOLEX ELECTRONIC TECHNOLOGIES, LLC AND SHOULD NOT BE USED WITHOUT WRITTEN PERMISSION

DIMENSION UNITS	SCALE
mm	3:1

GENERAL TOLERANCES (UNLESS SPECIFIED)		
ANGULAR TOL	±	1.0 °
4 PLACES	±	
3 PLACES	±	
2 PLACES	±	0.1
1 PLACE	±	0.2
0 PLACES	±	

DRAFT WHERE APPLICABLE MUST REMAIN WITHIN DIMENSIONS

CURRENT REV DESC:

EC NO: 171650
DRWN: PMANJUNATHAC 2018/01/03
CHK'D: MVANSLAMBROU 2018/02/16
APPR: MVANSLAMBROU 2018/02/16

INITIAL REVISION:
DRWN: APROFFITT 2014/04/28
APPR: VKOSHY 2014/05/14

THIRD ANGLE PROJECTION | DRAWING: A1-SIZE | SERIES: 33482

molex

MX150 BLADE
DUAL ROW SEALED ASSEMBLY MAT SEAL

PRODUCT CUSTOMER DRAWING

DOCUMENT NUMBER	DOC TYPE	DOC PART	REVISION
SD-33482-0001	PSD	001	E2

MATERIAL NUMBER	CUSTOMER	SHEET NUMBER
	GENERAL MARKET	5 OF 11

DOCUMENT STATUS	P1	RELEASE DATE	2018/02/16 22:02:26

PCBNEXT: master-tb-prod-A1
Page Size: A1-SIZE
Date/Time: 2017/10/06

SHEET DESCRIPTION
SYSTEM PACKAGING

CHARTED DIMENSION				
CKT	BLADE CONFIGURATION	RECEPTACLE CONFIGURATION	DIMENSIONS	
			K	L
2X2	STANDARD	W/O CLIPSLOT	72.78	28.00
		W/ CLIPSLOT	72.78	28.50
		LENGTHENED	77.21	28.00
2X3	STANDARD	W/O CLIPSLOT	72.78	28.00
		W/ CLIPSLOT		30.50
	LENGTHENED	W/O CLIPSLOT	74.79	28.00
		W/ CLIPSLOT		30.50
2X4	STANDARD	W/O CLIPSLOT	72.78	29.50
		W/ CLIPSLOT		31.50
2X6	STANDARD	W/O CLIPSLOT	72.79	35.58
		W/ CLIPSLOT		
2X8	STANDARD	W/O CLIPSLOT	72.67	42.25
		W/ CLIPSLOT		
2X10	STANDARD	STANDARD	72.78	49.05

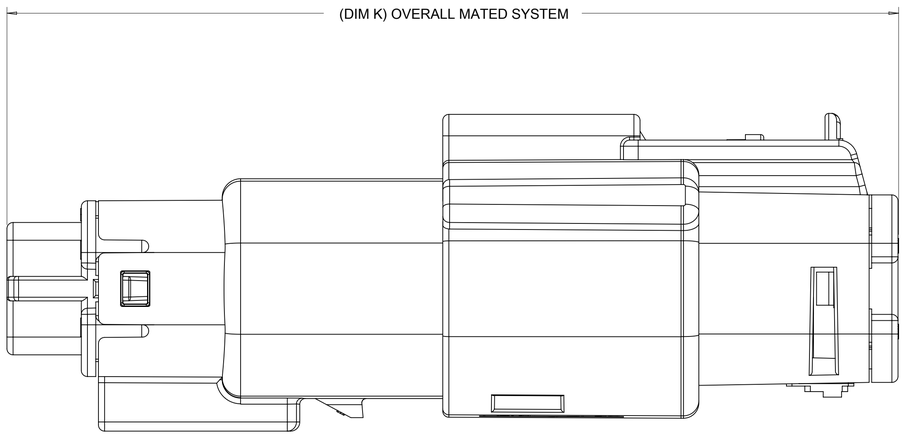

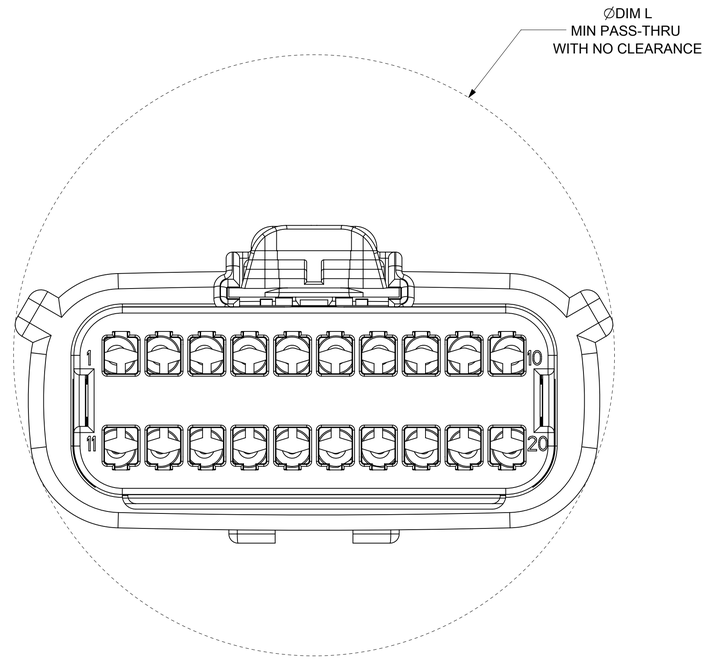

SYMBOLS	
A	= 0
C	= 0
D	= 0
S	= 0
	= 0
C	= 0
	= 0
	= 0
V	= 0

THIS DRAWING CONTAINS INFORMATION THAT IS PROPRIETARY TO MOLEX ELECTRONIC TECHNOLOGIES, LLC AND SHOULD NOT BE USED WITHOUT WRITTEN PERMISSION

DIMENSION UNITS	SCALE
mm	4:1

GENERAL TOLERANCES (UNLESS SPECIFIED)		
ANGULAR TOL	±	1.0 °
4 PLACES	±	
3 PLACES	±	
2 PLACES	±	0.1
1 PLACE	±	0.2
0 PLACES	±	

DRAFT WHERE APPLICABLE MUST REMAIN WITHIN DIMENSIONS

CURRENT REV DESC:

EC NO: 171650
DRWN: PMANJUNATHAC 2018/01/03
CHK'D: MVANSLAMBROU 2018/02/16
APPR: MVANSLAMBROU 2018/02/16

INITIAL REVISION:
DRWN: APROFFITT 2014/04/28
APPR: VKOSHY 2014/05/14

THIRD ANGLE PROJECTION | DRAWING: A1-SIZE | SERIES: 33482

molex

MX150 BLADE
DUAL ROW SEALED ASSEMBLY MAT SEAL

PRODUCT CUSTOMER DRAWING

DOCUMENT NUMBER	DOC TYPE	DOC PART	REVISION
SD-33482-0001	PSD	001	E2

MATERIAL NUMBER	CUSTOMER	SHEET NUMBER
	GENERAL MARKET	6 OF 11

DOCUMENT STATUS	P1	RELEASE DATE	2018/02/16 22:02:26

TEMPLATE FORMAT: A1-SIZE
REVISION: H
DATE: 2017/10/06

SHEET DESCRIPTION
BACKSHELL NOTES

BACKSHELL NOTES: VALID UNLESS OTHERWISE SPECIFIED

1. GENERAL:
a. APPLICATION SPECIFICATION SEE: AS-34951-001
-DESIGNED TO MATE WITH BLADE SEALED ASSEMBLY
SPECIFIED IN MOLEX DRAWING SD-33482-0001.
-SYSTEM TO BE USED WITH WIRE WITHIN DIAMETER RANGE OF 1.2mm TO 2.69mm.
-COMPONENTS ARE OPTIONAL AND MUST BE PURCHASED SEPERATELY.
-DESIGN IS OWNED BY SCHLEMMER FOR SCHLEMMER BACKSHELL.
-DESIGN IS OWNED BY MOLEX FOR MOLEX BACKSHELL.
-90˝ ADAPTOR DESIGN IS OWNED BY MOLEX.
-FOR ADDITIONAL INFORMATION SEE THE BACKSHELL COMPONENT DRAWING SD-34950-0001.

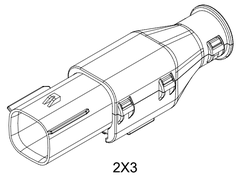

2X3

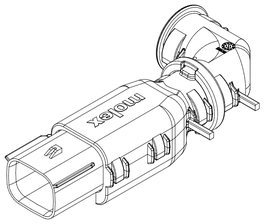

2X4

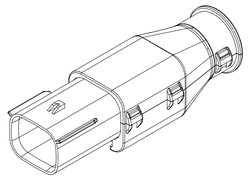

2X4

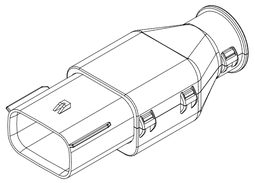

2X6

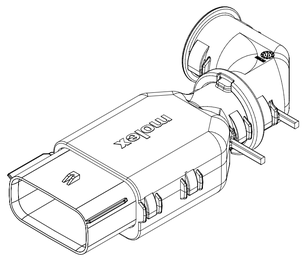

2X8

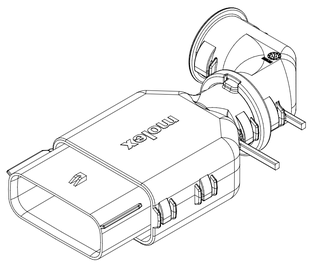

2X10

BACKSHELL CUSTOMER
MODEL NUMBER LEGEND

34950-XXXX

CUSTOMER MODEL COMPONENTS
- 0 - SCHLEMMER BACKSHELL ONLY
- 1 - SCHLEMMER BACKSHELL & MX150 HOUSING KEY A ASSEMBLY
- 2 - SCHLEMMER BACKSHELL & MX150 HOUSING KEY B ASSEMBLY
- 3 - SCHLEMMER BACKSHELL & MX150 HOUSING KEY C ASSEMBLY
- 4 - SCHLEMMER BACKSHELL & MX150 HOUSING KEY D ASSEMBLY
- 5 - MOLEX BACKSHELL ONLY
- 6 - MOLEX BACKSHELL & MX150 HOUSING KEY A ASSEMBLY
- 7 - MOLEX BACKSHELL & MX150 HOUSING KEY B ASSEMBLY
- 8 - MOLEX BACKSHELL & MX150 HOUSING KEY C ASSEMBLY
- 9 - MOLEX BACKSHELL & MX150 HOUSING KEY D ASSEMBLY

BACKSHELL FEATURES
- 1 - WITH RIBS
- 2 - WITHOUT RIBS
- 3 - 90˝ ADAPTOR

MX150 CIRCUIT SIZE 04, 06, 08, 12, 16, 20

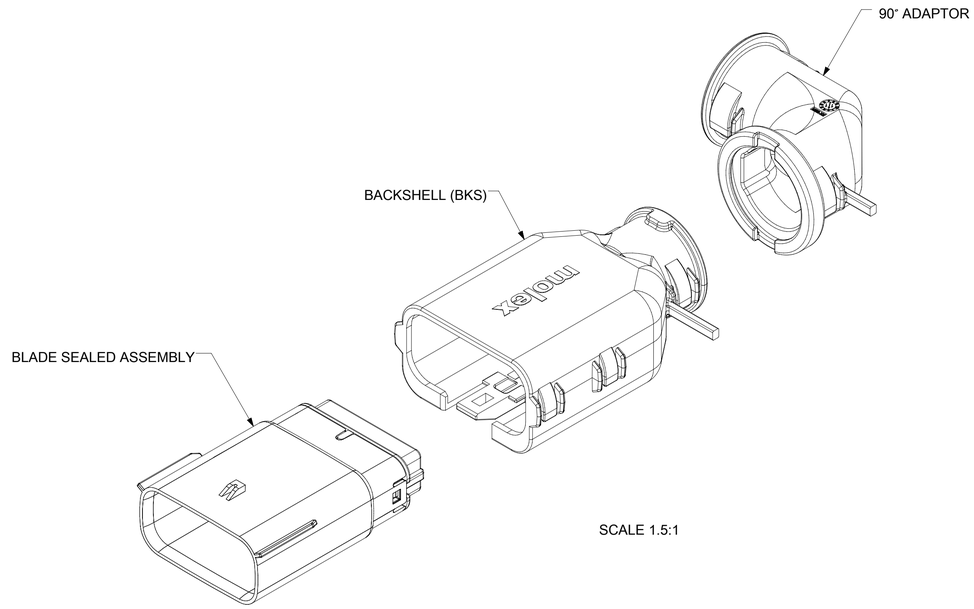

SCALE 1.5:1

THIS DRAWING CONTAINS INFORMATION THAT IS PROPRIETARY TO MOLEX ELECTRONIC TECHNOLOGIES, LLC AND SHOULD NOT BE USED WITHOUT WRITTEN PERMISSION

SYMBOLS	DIMENSION UNITS	SCALE
= 0	mm	1.5:1
= 0	GENERAL TOLERANCES (UNLESS SPECIFIED)	
= 0	ANGULAR TOL	± 1.0 °
= 0	4 PLACES	±
= 0	3 PLACES	±
= 0	2 PLACES	± 0.1
= 0	1 PLACE	± 0.2
= 0	0 PLACES	±
= 0	DRAFT WHERE APPLICABLE MUST REMAIN WITHIN DIMENSIONS	

CURRENT REV DESC:

EC NO: 171650
DRWN: PMANJUNATHAC 2018/01/03
CHK'D: MVANSLAMBROU 2018/02/16
APPR: MVANSLAMBROU 2018/02/16

INITIAL REVISION:
DRWN: APROFFITT 2014/04/28
APPR: VKOSHY 2014/05/14

THIRD ANGLE PROJECTION | DRAWING: A1-SIZE | SERIES: 33482

molex

MX150 BLADE
DUAL ROW SEALED ASSEMBLY MAT SEAL

PRODUCT CUSTOMER DRAWING

DOCUMENT NUMBER	DOC TYPE	DOC PART	REVISION
SD-33482-0001	PSD	001	E2

MATERIAL NUMBER	CUSTOMER	SHEET NUMBER
	GENERAL MARKET	7 OF 11

DOCUMENT STATUS	P1	RELEASE DATE	2018/02/16 22:02:26

FORMAT: molex-tb-print-A1-
DEVIATION: N
DATE: 2017/10/06

SHEET DESCRIPTION
SCHLEMMER BACKSHELL

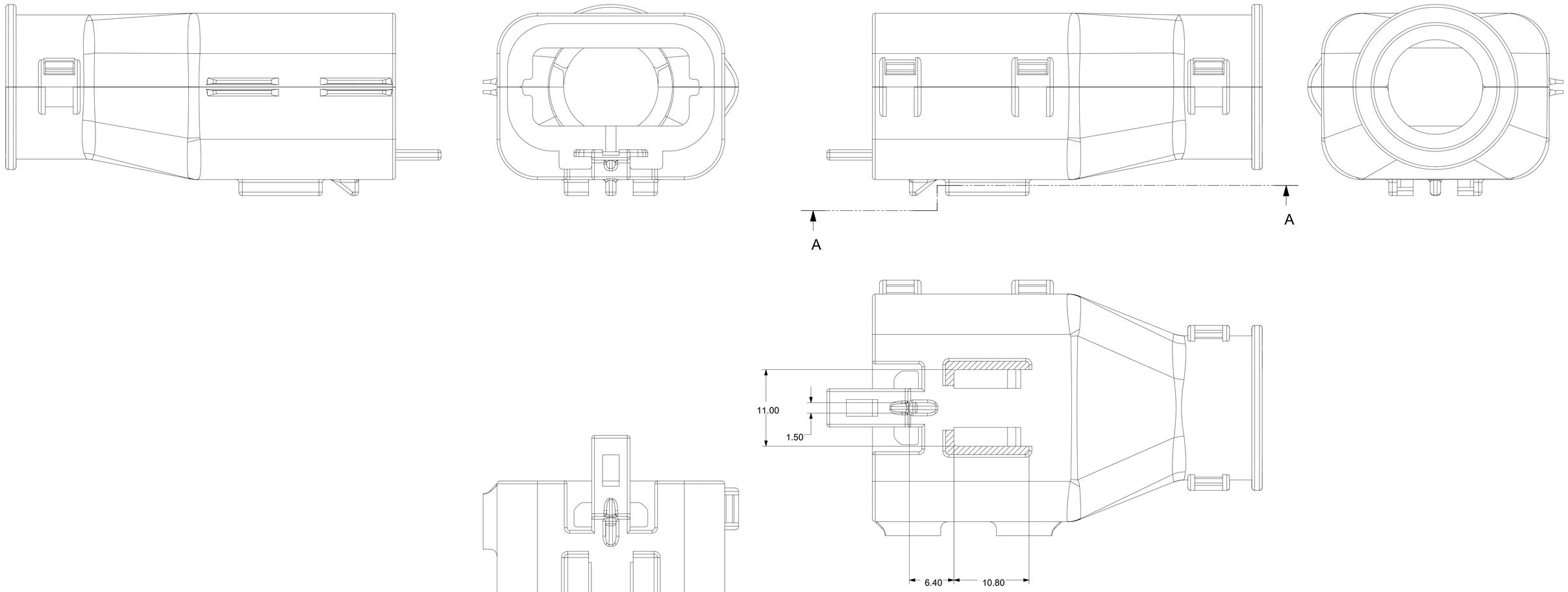

SECTION A-A

SYMBOLS	THIS DRAWING CONTAINS INFORMATION THAT IS PROPRIETARY TO MOLEX ELECTRONIC TECHNOLOGIES, LLC AND SHOULD NOT BE USED WITHOUT WRITTEN PERMISSION			
A = 0	DIMENSION UNITS: mm	SCALE: 3.5:1	CURRENT REV DESC:	molex
C = 0	GENERAL TOLERANCES (UNLESS SPECIFIED)			
E = 0	ANGULAR TOL ± 1.0 °		EC NO: 171650	MX150 BLADE DUAL ROW SEALED ASSEMBLY MAT SEAL
S = 0	4 PLACES ±		DRWN: PMANJUNATHAC 2018/01/03	
▼ = 0	3 PLACES ±		CHK'D: MVANSLAMBROU 2018/02/16	
C = 0	2 PLACES ± 0.1		APPR: MVANSLAMBROU 2018/02/16	PRODUCT CUSTOMER DRAWING
☒ = 0	1 PLACE ± 0.2		INITIAL REVISION:	DOCUMENT NUMBER: SD-33482-0001 / DOC TYPE: PSD / DOC PART: 001 / REVISION: E2
■ = 0	0 PLACES ±		DRWN: APROFFITT 2014/04/28	
V = 0	DRAFT WHERE APPLICABLE MUST REMAIN WITHIN DIMENSIONS		APPR: VKOSHY 2014/05/14	
			THIRD ANGLE PROJECTION / DRAWING: A1-SIZE / SERIES: 33482	MATERIAL NUMBER / CUSTOMER: GENERAL MARKET / SHEET NUMBER: 8 OF 11

DOCUMENT STATUS	P1	RELEASE DATE	2018/02/16 22:02:26

TEMPLATE: PRODUCT DRAWING
REV HISTORY: A
DATE: 2017/10/06

SHEET DESCRIPTION
MOLEX BACKSHELL

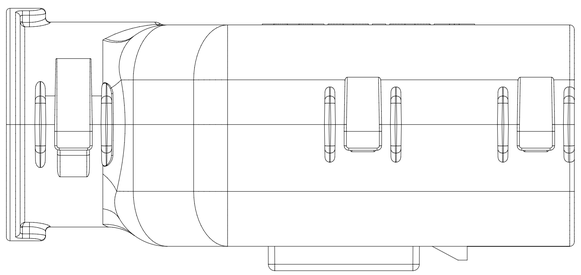

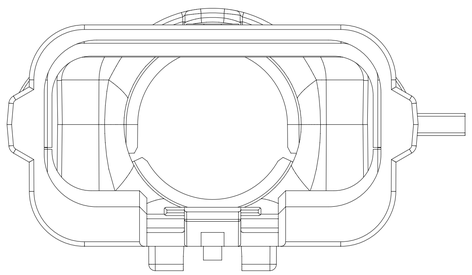

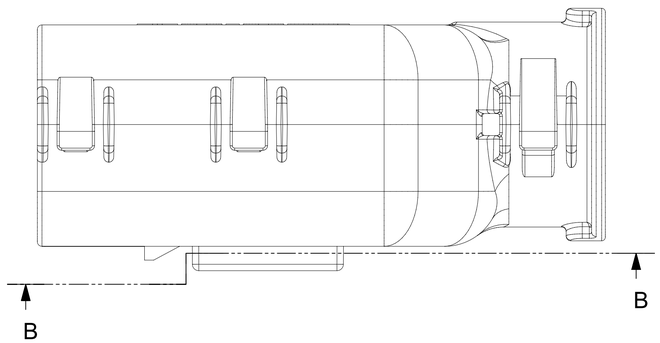

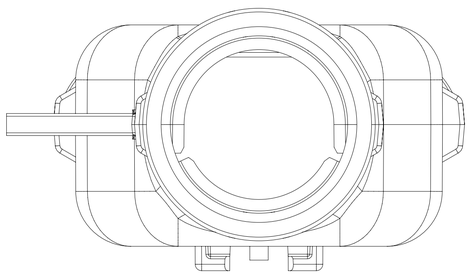

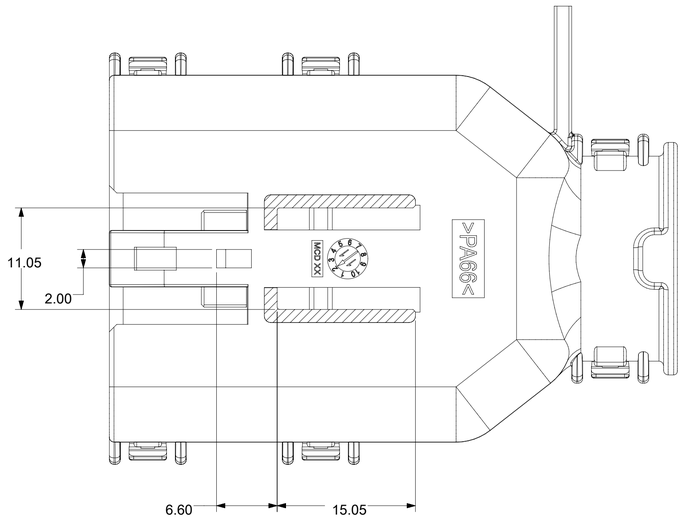

SECTION B-B

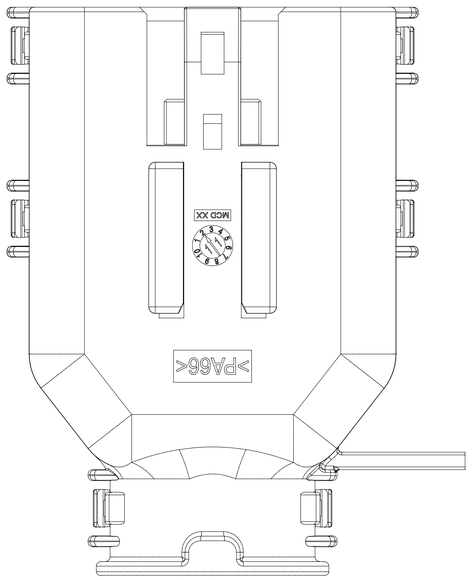

SYMBOLS	
A = 0	
C = 0	
F = 0	
S = 0	
= 0	
C = 0	
= 0	
= 0	
= 0	

THIS DRAWING CONTAINS INFORMATION THAT IS PROPRIETARY TO MOLEX ELECTRONIC TECHNOLOGIES, LLC AND SHOULD NOT BE USED WITHOUT WRITTEN PERMISSION

DIMENSION UNITS	SCALE
mm	3:1

GENERAL TOLERANCES (UNLESS SPECIFIED)		
ANGULAR TOL	±	1.0 °
4 PLACES	±	
3 PLACES	±	
2 PLACES	±	0.1
1 PLACE	±	0.2
0 PLACES	±	

DRAFT WHERE APPLICABLE MUST REMAIN WITHIN DIMENSIONS

CURRENT REV DESC:

EC NO: 171650
DRWN: PMANJUNATHAC 2018/01/03
CHK'D: MVANSLAMBROU 2018/02/16
APPR: MVANSLAMBROU 2018/02/16

INITIAL REVISION:
DRWN: APROFFITT 2014/04/28
APPR: VKOSHY 2014/05/14

THIRD ANGLE PROJECTION | DRAWING: A1-SIZE | SERIES: 33482

molex

MX150 BLADE
DUAL ROW SEALED ASSEMBLY MAT SEAL

PRODUCT CUSTOMER DRAWING

DOCUMENT NUMBER	DOC TYPE	DOC PART	REVISION
SD-33482-0001	PSD	001	E2

MATERIAL NUMBER	CUSTOMER	SHEET NUMBER
	GENERAL MARKET	9 OF 11

DOCUMENT STATUS	P1	RELEASE DATE	2018/02/16 22:02:26

TEMPLATE: master-landscape
REVISION: H
DATE: 2017/10/05

SHEET DESCRIPTION
SCHLEMMER BACKSHELL CONFIGURATIONS

CHARTED DIMENSIONS

CKT	BLADE CONFIGURATION	RECEPTACLE CONFIGURATION	DIMENSIONS M	N	P	R	T
2X3	STANDARD	STANDARD	106.83	32.75	31.75	29.00	29.50
	LENGTHENED		108.71				
2X4	STANDARD	STANDARD	106.83	33.50	31.90	30.70	30.70
2X6	STANDARD	STANDARD	106.83	37.84	37.27	35.83	36.83

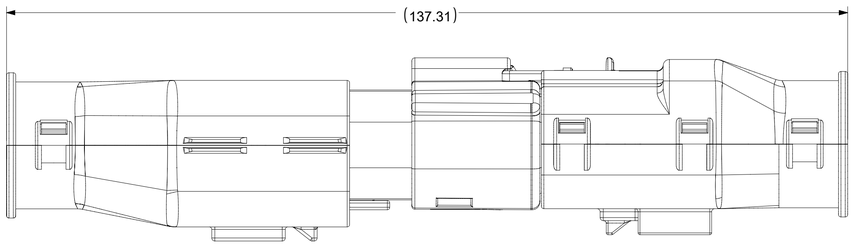

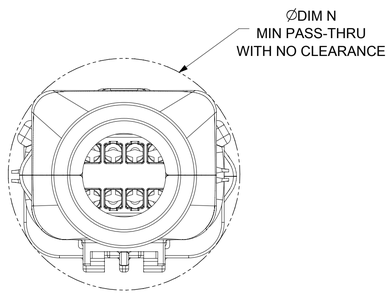

OVERALL MATED SYSTEM WITH BLADE AND RECEPTACLE BACKSHELL

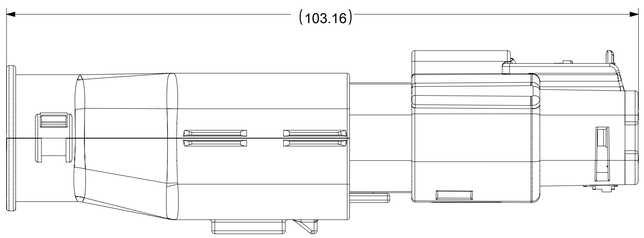

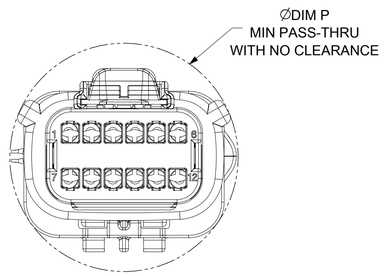

OVERALL MATED SYSTEM WITH BLADE BACKSHELL

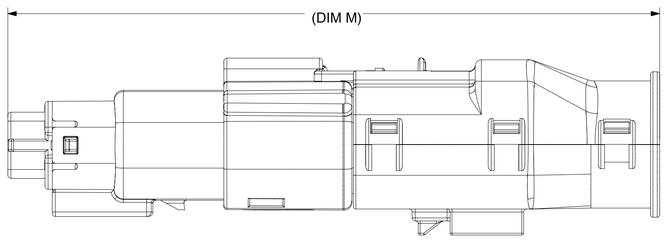

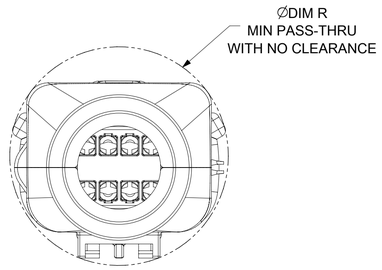

OVERALL MATED SYSTEM WITH RECEPTACLE BACKSHELL

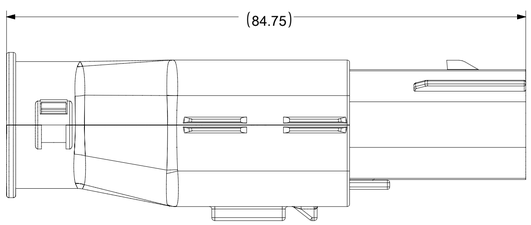

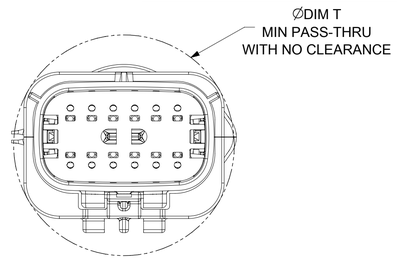

BLADE SEALED ASSEMBLY WITH BLADE BACKSHELL

SYMBOLS	DIMENSION UNITS	SCALE
= 0	mm	2:1
= 0	GENERAL TOLERANCES (UNLESS SPECIFIED)	
= 0	ANGULAR TOL	± 1.0 °
= 0	4 PLACES	±
= 0	3 PLACES	±
= 0	2 PLACES	± 0.1
= 0	1 PLACE	± 0.2
= 0	0 PLACES	±
= 0	DRAFT WHERE APPLICABLE MUST REMAIN WITHIN DIMENSIONS	

THIS DRAWING CONTAINS INFORMATION THAT IS PROPRIETARY TO MOLEX ELECTRONIC TECHNOLOGIES, LLC AND SHOULD NOT BE USED WITHOUT WRITTEN PERMISSION

CURRENT REV DESC:

EC NO: 171650
DRWN: PMANJUNATHAC 2018/01/03
CHK'D: MVANSLAMBROU 2018/02/16
APPR: MVANSLAMBROU 2018/02/16

INITIAL REVISION:
DRWN: APROFFITT 2014/04/28
APPR: VKOSHY 2014/05/14

THIRD ANGLE PROJECTION | DRAWING: A1-SIZE | SERIES: 33482

molex

MX150 BLADE
DUAL ROW SEALED ASSEMBLY MAT SEAL

PRODUCT CUSTOMER DRAWING

DOCUMENT NUMBER	DOC TYPE	DOC PART	REVISION
SD-33482-0001	PSD	001	E2

MATERIAL NUMBER	CUSTOMER	SHEET NUMBER
	GENERAL MARKET	10 OF 11

DOCUMENT STATUS	P1	RELEASE DATE	2018/02/16 22:02:26

FORMAT: master-tb-print-A1
DATE: 2018-01-11
DATE: 2017-10-06

SHEET DESCRIPTION
MOLEX BACKSHELL CONFIGURATIONS

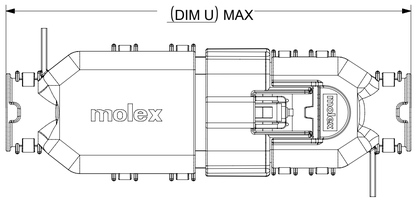

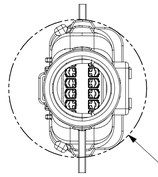

MIN PASS-THRU
WITH NO CLEARANCE

OVERALL MATED SYSTEM WITH BLADE AND RECEPTACLE BACKSHELL

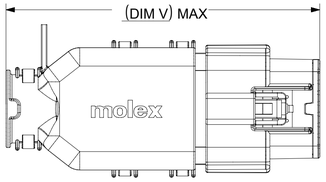

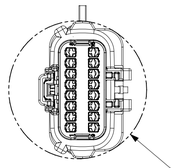

MIN PASS-THRU
WITH NO CLEARANCE

OVERALL MATED SYSTEM WITH BLADE BACKSHELL

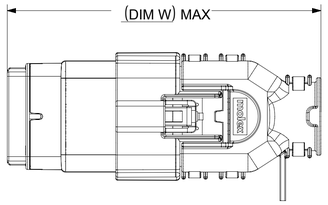

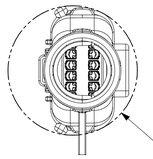

MIN PASS-THRU
WITH NO CLEARANCE

OVERALL MATED SYSTEM WITH RECEPTACLE BACKSHELL

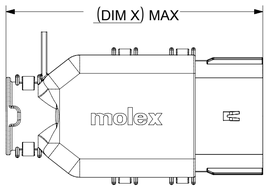

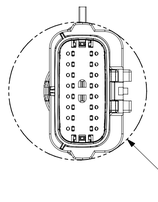

MIN PASS-THRU
WITH NO CLEARANCE

BLADE SEALED ASSEMBLY WITH BLADE BACKSHELL

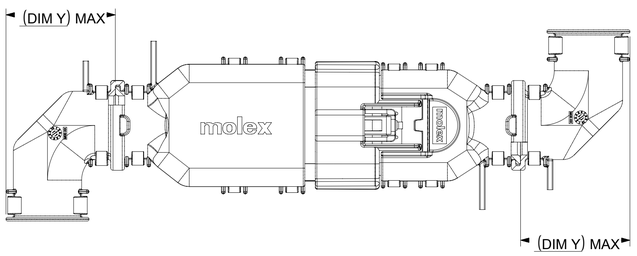

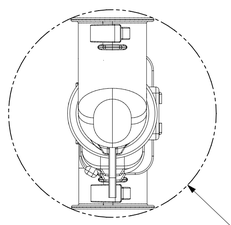

MIN PASS-THRU
WITH NO CLEARANCE

ADD THE VALUE OF 'Y' TO THE TOTAL DIMENSION
WHENEVER ADAPTOR IS USED

CHARTED DIMENSIONS

CKT	BLADE CONFIGURATION	RECEPTACLE CONFIGURATION	DIMENSIONS									
			U	V	W	X	Y	AA	AB	AC	AD	AE
2X4	STANDARD	STANDARD	115.24	94.36	93.93	75.62	32.10	32.93	32.54	32.85	31.76	56.81
2X8	STANDARD	STANDARD	132.49	102.81	102.73	84.07	36.10	45.44	45.44	42.65	45.44	68.18
2X10	STANDARD	STANDARD	132.49	102.81	102.73	84.07	36.10	45.44	45.44	42.65	45.44	68.18

SYMBOLS	
= 0	
= 0	
= 0	
= 0	
= 0	
= 0	
= 0	
= 0	
= 0	

THIS DRAWING CONTAINS INFORMATION THAT IS PROPRIETARY TO MOLEX ELECTRONIC TECHNOLOGIES, LLC AND SHOULD NOT BE USED WITHOUT WRITTEN PERMISSION

DIMENSION UNITS	SCALE
mm	1:1

GENERAL TOLERANCES (UNLESS SPECIFIED)		
ANGULAR TOL	±	1.0 °
4 PLACES	±	
3 PLACES	±	
2 PLACES	±	0.1
1 PLACE	±	0.2
0 PLACES	±	

DRAFT WHERE APPLICABLE MUST REMAIN WITHIN DIMENSIONS

CURRENT REV DESC:

EC NO: 171650
DRWN: PMANJUNATHAC 2018/01/03
CHK'D: MVANSLAMBROU 2018/02/16
APPR: MVANSLAMBROU 2018/02/16

INITIAL REVISION:
DRWN: APROFFITT 2014/04/28
APPR: VKOSHY 2014/05/14

THIRD ANGLE PROJECTION | DRAWING: A1-SIZE | SERIES: 33482

molex

MX150 BLADE
DUAL ROW SEALED ASSEMBLY MAT SEAL

PRODUCT CUSTOMER DRAWING

DOCUMENT NUMBER	DOC TYPE	DOC PART	REVISION
SD-33482-0001	PSD	001	E2

MATERIAL NUMBER	CUSTOMER	SHEET NUMBER
	GENERAL MARKET	11 OF 11

DOCUMENT STATUS	P1	RELEASE DATE	2018/02/16 22:02:26