Lock All Fields

THIS DRAWING IS UNPUBLISHED. RELEASED FOR PUBLICATION
© COPYRIGHT ALL RIGHTS RESERVED.

LOC	DIST

REVISIONS

P	LTR	DESCRIPTION	DATE	DWN	APVD
	A1	ECR-12-015651	04SEPT2012	MY	TE

Dimensioning and tolerancing per ASME Y14.5M-2009

REPLACED BY OCEAN STYLE APPLICATOR PART NUMBER 2151045-5

FOR REPLACEMENT PARTS FOR APPLICATOR 2034014
REFER TO ADDITIONAL PAGE(S). SPARE PARTS KIT (IF LISTED)
WILL REMAIN AVAILABLE.

THE REPLACEMENT OCEAN STYLE APPLICATOR HAS THE
SAME TERMINATOR/PRESS INTERFACE AS APPLICATOR
2034014

THIS DRAWING IS A CONTROLLED DOCUMENT.

DIMENSIONS:

TOLERANCES UNLESS OTHERWISE SPECIFIED:
0 PLC ±
1 PLC ±
2 PLC ±
3 PLC ±
4 PLC ±
ANGLES ±

MATERIAL

FINISH

DWN M. YOUNGER
CHK M. YOUNGER
APVD T. ELBIN
PRODUCT SPEC
APPLICATION SPEC
WEIGHT

TE Connectivity

NAME
SIDE FEED SYSTEM III APPLICATOR
WITH FINE ADJUST

SIZE	CAGE CODE	DRAWING NO	RESTRICTED TO
A3		C- 2034014	

CUSTOMER DRAWING | SCALE | SHEET 1 OF 2 | REV A1

1470-19 (3/11)

Pro/ENGINEER DRAWING

Dimensioning and tolerancing per ASME Y14.5M-2009

THIS DRAWING IS UNPUBLISHED. RELEASED FOR PUBLICATION 20
© COPYRIGHT 20 BY TYCO ELECTRONICS CORPORATION. ALL RIGHTS RESERVED.

PART NUMBER	REV	DESCRIPTION	PROGRAMMED MEMORY CHIP
2034014-1	A	CUTS CARRIER	8-2034014-1
2034014-6	A	CONTINUOUS CARRIER	8-2034014-6
7-2034014-1	A	-1 AND SPARE PARTS	9-2034014-1
7-2034014-6	A	-6 AND SPARE PARTS	9-2034014-6
7-2034014-7	A	SPARE PARTS KIT	-

APPLICATOR DATA		
CRIMP	SIZE	TYPE
WIRE	1.57mm [.062]	F
INSUL	2.29mm [.090]	O
APPL INSTRUCTIONS 408-10135		

TERMINAL DATA: TE TERMINAL	TYCO ELECTRONICS CRIMP SPEC		
TERMINAL NAME: MICRO POWER QUADLOCK PIN/SKT CONTACT			
WIRE STRIP LENGTH 3.2-3.8 mm [.125-.149 IN]	INSULATION DIAMETER RANGE 1.20-1.60mm [.047-.062 IN]		
TERMINAL APPL SPEC	114-18141	-	-
	-	-	-
TERMINALS APPLIED			
968679-2	968679-5	968678-2	968678-5

WIRE SIZE	CRIMP HEIGHT mm[INCH]	REF SETTING*
0.5mm²	1.15±.03 [.045±.0012]	C0
0.35mm²	1.08±.03 [.043±.0012]	C5

FEED FINGER	SET UP GAGE	LOC	DIST
1901694-1	1901067-1	A	66

REVISIONS					
P	LTR	DESCRIPTION	DATE	DWN	APVD
	A	RELEASED	22FEB2008	RD	GB

* WARNING
ON INSTALLATION, SET WIRE DISC TO LARGEST WIRE SIZE SETTING. USE OF SETTINGS BELOW MIN. REQUIRED CRIMP HEIGHT SETTING WILL CAUSE DAMAGE TO CRIMP TOOLING.

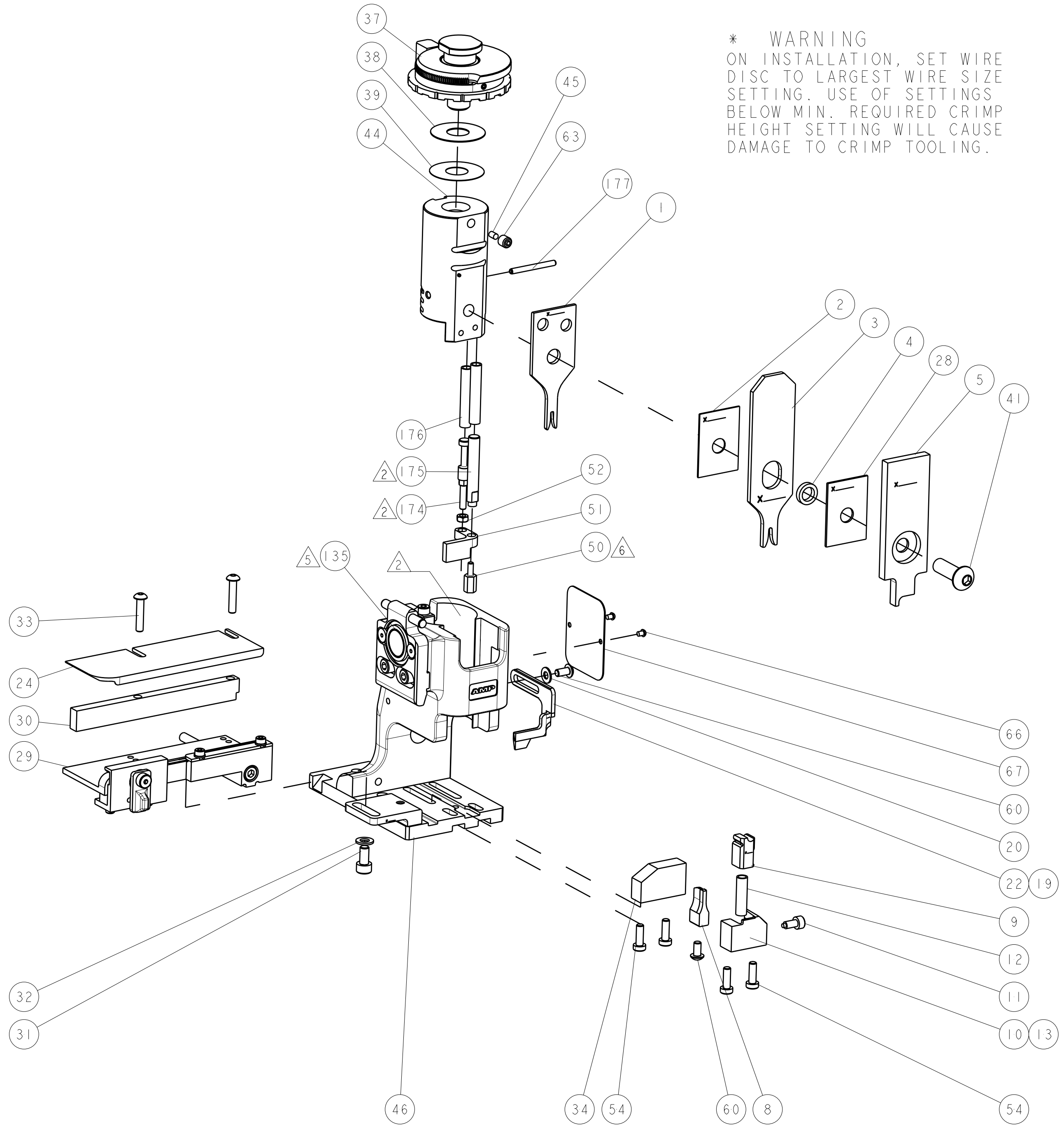

1 RECOMMENDED SPARE PARTS.

2 GREASE BEARING SURFACES LIGHTLY.

3. LUBRICATE DAILY PER THE APPLICATOR INSTRUCTION SHEET SUPPLIED WITH THE APPLICATOR.

4 ITEM 19 - OPTIONAL STRIPPER FOR BENCH MACHINE APPLICATIONS.

5 APPLICATOR SPECIFIC DATA TO BE ENTERED INTO BLANK MEMORY CHIP AT ASSEMBLY.

6 APPLY P/N 1-23419-5 LOCTITE(R) TO THREADS.

-77	-76	-71	-6	-1	PART NO	DESCRIPTION	ITEM NO
-	1	1	1	1	1-993111-6	PIN, SLOTTED SPRING 3.0 X 30.0	177
-	2	2	2	2	3-22280-7	SPRING, COMPRESSION	176
-	1	1	1	1	1752353-1	GUIDE PIN,HOLDDOWN	175
-	1	1	1	1	1901680-1	GUIDE PIN,HOLDDOWN	174
-	REF	REF	REF	REF	SEE TABLE	MEMORY CHIP, PROGRAMMED	135
-	1	1	1	1	1633565-1	DOCUMENTATION PACKAGE	71
-	1	1	1	1	1976552-1	TAG,IDENTIFICATION	67
-	2	2	2	2	21017-1	SCREW, DRIVE	66
-	1	1	1	1	3-18031-0	SCR, SET, CUP POINT M6 X 6.0	63
-	2	2	2	2	1655785-1	SCR, BTN SKT HD CAP (M4 X 8)	60
-	4	4	4	4	1655783-3	SCR, CAP, SOC HD, LOW HEAD, M4 X 12	54
-	1	1	1	1	1-18030-0	NUT, HEX, REG M3.5	52
-	1	1	1	1	1901681-1	HOLDDOWN, TERMINAL	51
-	1	1	1	1	2-1752354-2	STANDOFF,HOLD-DOWN	50
-	1	1	1	1	1752300-1	SF SYSTEM III APPLICATOR	46
-	1	1	1	1	690191-1	PLUG,NYLON	45
-	1	1	1	1	1901069-1	RAM ASSEMBLY, SYSTEM III RETROFIT	44
-	1	1	1	1	2-1655785-3	SCR, BTN SKT HD CAP (M8 X 25)	41
-	1	1	1	1	690125-1	SHIM SUB-ASSY	39
-	1	1	1	1	469367-9	SHIM	38
-	1	1	1	1	879103-3	FINE ADJUST HEAD ASSEMBLY	37
-	1	1	1	1	1-1752356-3	SUPPORT, TERMINAL	34
-	2	2	2	2	3-1655785-3	SCR, BTN SKT HD CAP (M4 X 20)	33
-	1	1	1	1	18028-3	WASHER, FLAT, REG M5	32
-	1	1	1	1	5-1655316-3	SCR, SKT HD CAP, M5 X 10.0	31
-	1	1	1	1	1-1320908-5	SPACER, STRIP GUIDE	30
-	1	1	1	1	1901087-1	ASSEMBLY, STRIP GUIDE	29
-	1	1	1	1	1-455888-0	SPACER, CRIMPER	28
-	1	1	1	1	1320928-5	PLATE, STRIP GUIDE	24
-	1	1	1	1	1976045-1	STRIPPER	22
-	1	1	1	1	18028-2	WASHER, FLAT, REG M4	20
-	REF	REF	REF	REF	1752311-1	STRIPPER	19
-	1	-	1	-	1338684-1	SHEAR HOLDER, FRONT	13
-	1	1	1	1	3-22280-3	SPRING, COMPRESSION	12
-	1	1	1	1	356885-4	STOP, SHEAR	11
-	-	1	-	1	1320921-1	SHEAR HOLDER, FRONT, CUT	10
-	1	1	1	1	462006-1	FLOATING SHEAR, FRONT	9
1	2	2	1	1	5-1333202-3	ANVIL, COMBINATION	8
-	1	1	1	1	2-455889-0	DEPRESSOR, SHEAR	5
-	1	1	1	1	238011-9	BLOCK, CRIMPER SPACER	4
1	2	2	1	1	8-456135-0	CRIMPER, INSULATION O PREMIUM	3
-	1	1	1	1	455888-6	SPACER, CRIMPER	2
1	2	2	1	1	3-456403-9	CRIMPER, WIRE PREMIUM	1

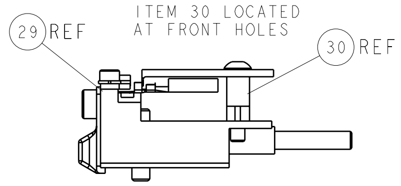

FEED TRACK POSITION

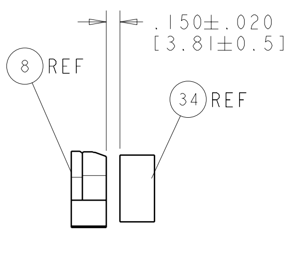

TERMINAL SUPPORT LOCATION

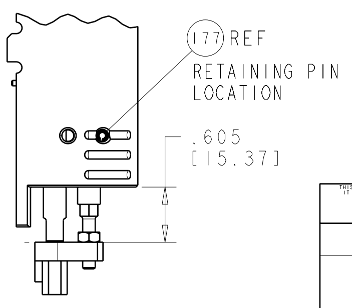

HOLDDOWN SET-UP

THIS DRAWING IS A CONTROLLED DOCUMENT FOR TYCO ELECTRONICS CORPORATION. IT IS SUBJECT TO CHANGE AND THE CONTROLLING ENGINEERING ORGANIZATION SHOULD BE CONTACTED FOR THE LATEST REVISION.

DIMENSIONS: INCHES[mm]

TOLERANCES UNLESS OTHERWISE SPECIFIED:
0 PLC ±-
1 PLC ±-
2 PLC ±-
3 PLC ±-
4 PLC ±-
ANGLES ±-

MATERIAL - | FINISH -

DWN R.DOBSON 11JAN2008
CHK R.DOBSON 11JAN2008
APVD N.DEMING 11JAN2008
PRODUCT SPEC -
APPLICATION SPEC SEE TABLE
WEIGHT -

Tyco Electronics
Tyco Electronics Harrisburg, PA 17105-3608

NAME SIDE FEED SYSTEM III APPLICATOR WITH FINE ADJUST -

SIZE A1 | CAGE CODE 00779 | DRAWING NO C-2034014 | RESTRICTED TO -

CUSTOMER DRAWING | SCALE 3:5 | SHEET 1 OF 1 | REV A

AMP 4805 REV 31MAR2000

Pro/ENGINEER DRAWING

Mouser Electronics

Authorized Distributor

Click to View Pricing, Inventory, Delivery & Lifecycle Information:

TE Connectivity:

2034014-1