THIS DRAWING IS UNPUBLISHED.
VERTRAULICHE UNVEROEFFENTLICHTE ZEICHNUNG
© COPYRIGHT — TE Connectivity
RELEASED FOR PUBLICATION: ,1997.
FREI FUER VEROEFFENTLICHUNG
ALL RIGHTS RESERVED.
ALLE RECHTE VORBEHALTEN.

REVISIONS
ABGEREGUNGEN

P	LTR	DESCRIPTION BESCHREIBUNG	DATE	DWN	APVD
	B2	REVISED PER ECO-09-024717	06NOV09	KK	AEG
	B3	ECR-10-007735	01JUN10	RK	SRE
	B4	REVISED PER ECR-16-016768	22AUG2017	AP	MKO

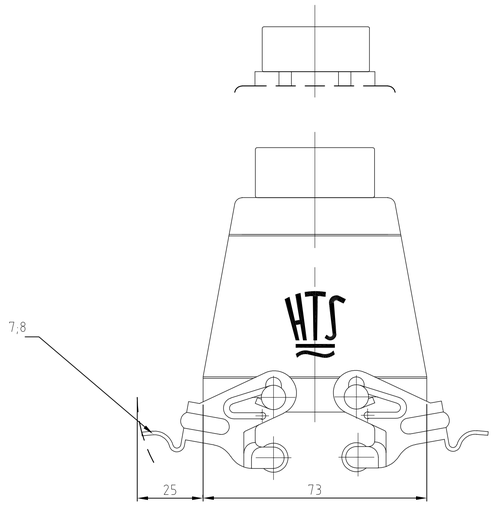

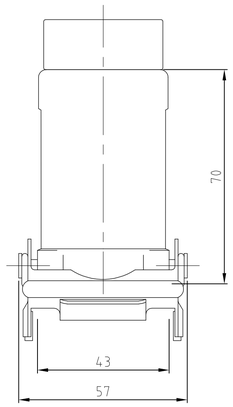

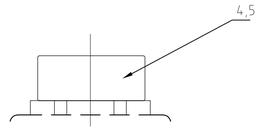

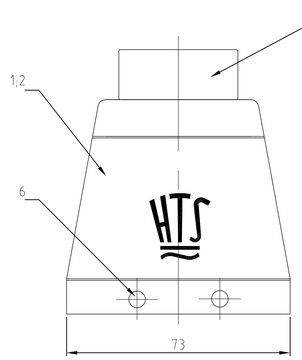

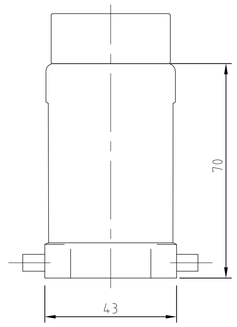

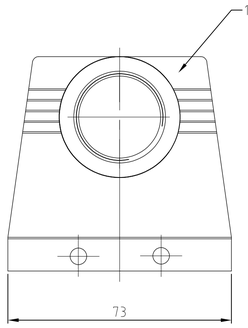

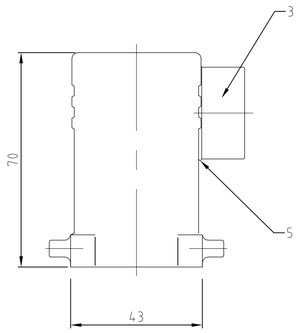

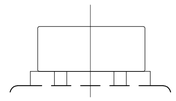

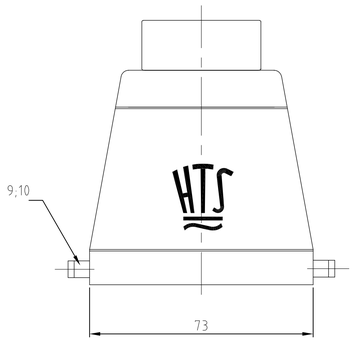

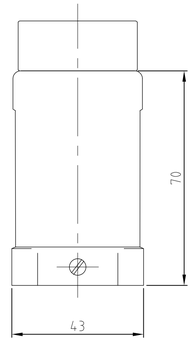

△3 OBSOLETE PARTS: OBSOLETE CIS STREAMLINING PER D.RENAUD/D.SINISI

HD.24.STW.1.21.Z	HD-K.24.Sto-GR.1.21.Z	HD.24.Sto-GR.1.21.Z	HD-K.24.Sto-VS.1.21.Z	HD.24.Sto-VS.1.21.Z	HD-K.24.Sto.1.21.Z	HD.24.Sto.1.21.Z	ORDERING TEXT / BESTELLTEXT	DESCRIPTION / BENENNUNG	MATERIAL △1	SURFACE / OBERFLÄCHE △2	COLOR / FARBE △2	ITEM NO POS.	REMARKS / BEMERKUNGEN
	OBSOLETE	OBSOLETE	OBSOLETE	OBSOLETE	OBSOLETE △3	OBSOLETE							
	2							clip bolt	stainless steel			10	
		2						clip bolt	steel	zink plated	blue	9	
				2				locking clip	stainless steel			8	
					2			locking clip	steel	zink plated	blue	7	
						4		clip bolt	stainless steel			6	
1	1					1		O-Ring	Neoprene		black	5	
	1		1			1		hexagonal adaptor 6kt PG21	brass	nickel plated		4	
1		1		1			1	adaptor	brass	nickel plated		3	
	1		1		1			hood HD	aluminium/ALU	aluminium oxid	black	2	
1		1		1			1	hood HD	aluminium/ALU		grey	1	
0-2	2-7	1-7	2-1	1-1	2-6	1-6							

THIS DRAWING IS A CONTROLLED DOCUMENT.
DIESE ZEICHNUNG IST EIN KONTROLLIERTES DOKUMENT.

DIMENSIONS: MASSEINHEITEN mm

TOLERANCES UNLESS OTHERWISE SPECIFIED: ALLGEMEINTOLERANZEN
0 PLC ± –
1 PLC ± –
2 PLC ± –
3 PLC ± –
4 PLC ± –
ANGLES / WINKEL ± –

MATERIAL – △2

FINISH / OBERFLAECHE / FARBE – △2

DWN Kramer 23.06.98
CHK Schweiger 24.06.98
APVD –
PRODUCT SPEC PRODUKTSPEZ —
APPLICATION SPEC VERARBEITUNGSSPEZ. —
WEIGHT GEWICHT 0.000000

TE Connectivity

NAME
HOOD
STECKERGEH USE HD.24.STO/STW.1.21.Z

SIZE	CAGE CODE	DRAWING NO ZEICHNUNGS-NR.	RESTRICTED TO NUR FUER
A1	00779	C-1102501	—

CUSTOMER DRAWING / KUNDENZEICHNUNG
SCALE MASSSTAB 1 : 1 | SHEET BLATT 1 OF VON 1 | REV B4

4805 (1/15)

Mouser Electronics

Authorized Distributor

Click to View Pricing, Inventory, Delivery & Lifecycle Information:

TE Connectivity:

1-1102501-6