PRODUCT NUMBER

10082202–YXX–XXLF

PLATING

1 = 0.76µm GOLD OR 0.76µm GXT (PdNi WITH GOLD FLASH) ON CONTACT AREA 2µm MATTE TIN ON TAIL

4 = 2µm MATTE TIN ON CONTACT AREA AND TAIL

8 = 0.38µm GOLD ON CONTACT AREA 2µm MATTE TIN ON TAIL

RoHS COMPATIBLE SEE NOTE 7

TOTAL NB OF POSITIONS 04 TO 72

PACKAGING NOTE 3.

| PIN STYLE | DIM "B" | MATING SIDE |
|---|---|---|
| 01 | 2.50 | 5.84 |
| 02 | 2.50 | 6.75 |
| 03 | 3.00 | 5.84 |
| 04 | 3.00 | 6.75 |
| 05 | 2.90 | 8.80 |

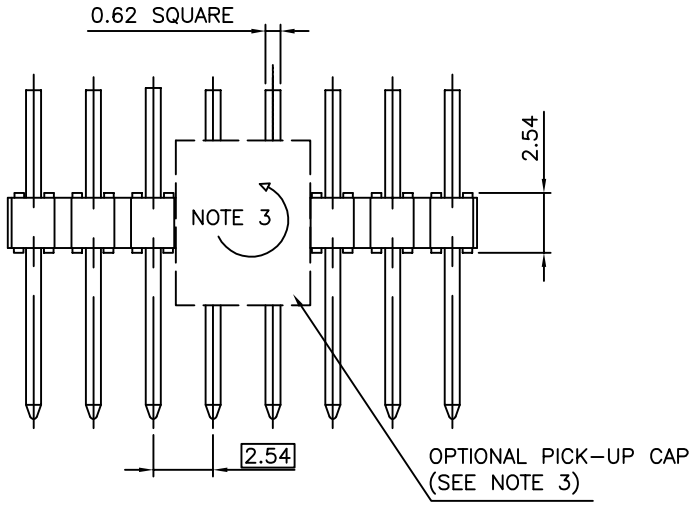


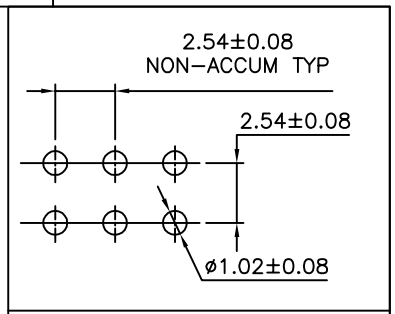


RECOMMENDED HOLE PATTERN

NOTES:

1. HOUSING MAT'L : HIGH TEMPERATURE THERMOPLASTIC. UL94V–0 COLOR: BLACK
2. PIN MATERIAL : PHOSPHOR BRONZE
3. PACKAGING :
   – = POLY BAGS
   A = TAPE & REEL WITH CAP, AS AVAILABLE
4. 9N MIN RETENTION IN EITHER DIRECTION
5. TO DETERMINE DIMENSIONS :
   N = NUMBER OF POSITIONS PER ROW
   EXAMPLE : 8 POS N x 2.54 = 20.32mm
6. UNDERPLATING : 1.27µm Ni MIN
7. RoHS COMPATIBLE PRODUCT SPECIFICATIONS
   a – PLATING:
   – "LF" MEANS THE PRODUCT IS LEAD–FREE, 2µm MINIMUM MATTE TIN OVER 1.27µm MINIMUM NICKEL UNDERPLATE.
   b – MANUFACTURING PROCESS COMPATIBILITY
   – THE HOUSING WILL WITHSTAND EXPOSURE TO 260°C PEAK TEMP FOR 30 SECONDES IN A CONVECTION, INFRARED, OR VAPOR REFLOW OVEN
   c – LABELING:
   – MEETS PACKAGING SPECS AS PER GS–14–920
   d – LEGAL STATEMENT: SEE GS–47–0004

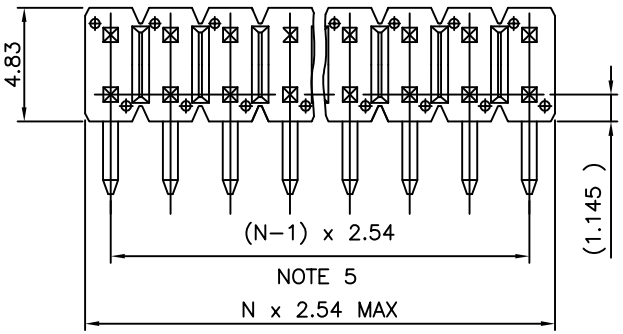


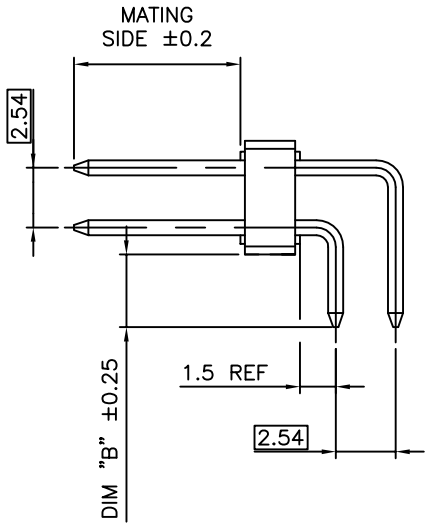


| mat'l. code | | | | surface | tolerance | projection | product family |
|---|---|---|---|---|---|---|---|
| SEE NOTES | | | | ISO 1302 | ISO 406 ISO 1101 | | BERGSTIK |
| ltr | ecn no | dr | date | tolerances unless otherwise specified | | | title |
| A | F08–0104 | LMU | 08.01.15 | angles | linear .X ±0.3 | mm | UNSHR.HEADER |
| B | F08–0129 | LMU | 08.02.22 | | .XX ±.015 | | RA DR PIN IN PASTE |
| C | F09–0072 | JCO | 09.07.23 | | .XXX ±0.05 | scale 5:1 | |
| D | B–18990 | LMU | 14.10.06 | dr | L.MULIN 08.01.15 | | dwg no 10082202 sheet 1 of 1 size A3 |
| E | B–20031 | AMA | 15.01.20 | engr | J.COMPAGNON 08.01.15 | | |
| F | F–23188 | AMA | 16.02.01 | chr | | | |
| | | | | appd | JM.C 08.01.15 | | type CUSTOMER Drawing |
| sheet index | revision sheet | | | | | | |

form: A3

FCIconnect.com
Copyright FCI