THIS DRAWING IS UNPUBLISHED. RELEASED FOR PUBLICATION -
© COPYRIGHT 2011 - ALL RIGHTS RESERVED.
MATED WITH: PASSEND ZU: 967325, 968968

LOC	DIST
A1	-

PROJEKT NR.: A92-52069

REVISIONS

P	LTR	DESCRIPTION	DATE	DWN	APVD
	D4	REVISED PER ECO-11-005150	30MAR2011	RK	HMR

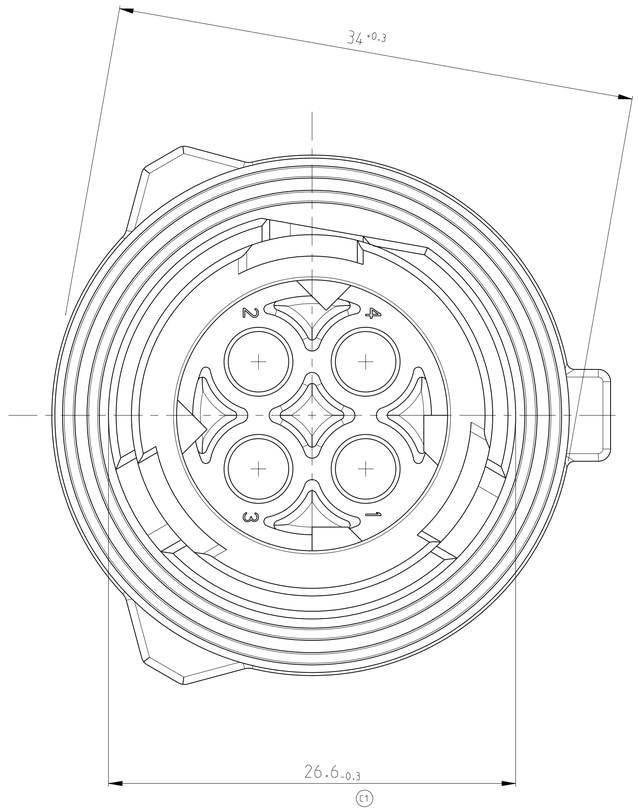

SECTION A-A
Schnitt

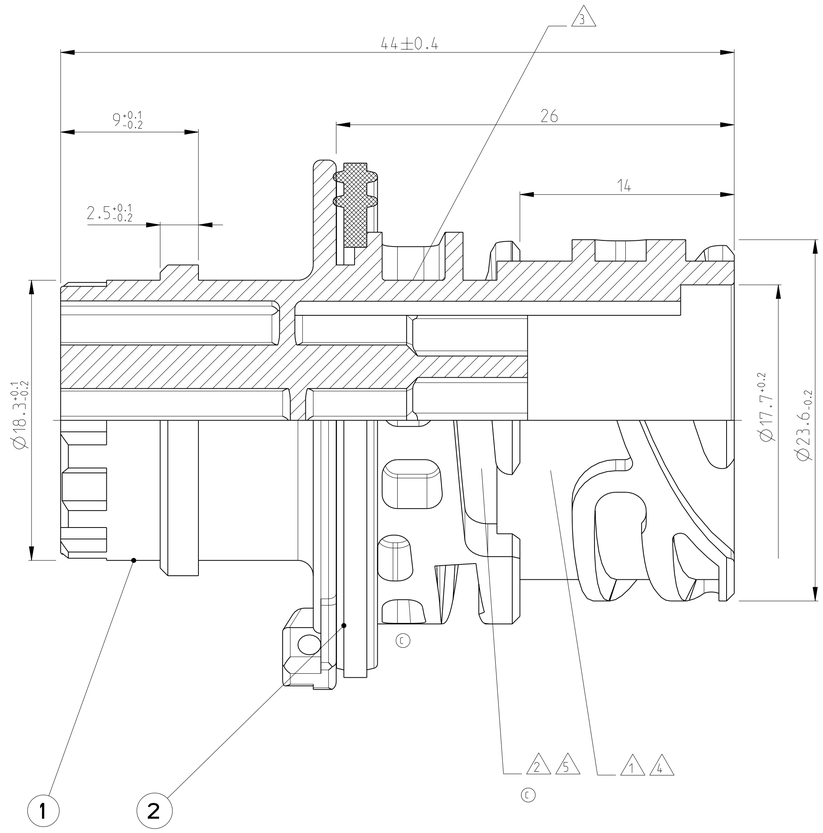

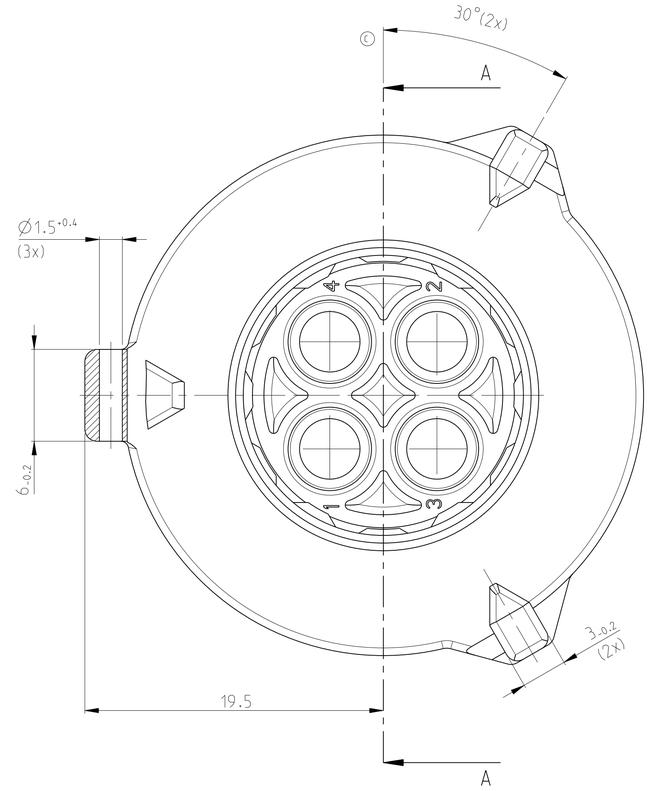

NOTES:
Bemerkungen:

(D3) 1 AMP OR Tyco Electronics (TE) LOGO AND TE CONNECTIVITY SINGLE PART-NUMBER
AMP oder Tyco Electronics (TE) Logo und TE CONNECTIVITY Einzelteilnummer

2 MATERIAL MARKING
Werkstoffkennzeichnung

3 REVISION OF THE MOULD
Werkzeugaenderungsindex

4 PRODUCTION DATE
Produktionsdatum

5 CAVITY MARKING
Nestmarkierung

6 FOR SUITABLE CONTACTS AND SEALS SEE DRAWING:
Zu verwendende Kontakte und Einzeldichtungen
(D3) (D1) (C1) siehe Tabellenzeichnung:

TE CONNECTIVITY 1355064

(C) MAX. WIRE THICKNESS: 2.5mm² FLR
max. Drahtgroesse: 2.5mm² FLR

7 PANEL MOUNTING WITH FIXING RING
TE CONNECTIVITY-NO. 965687-1
Hinterwandmontage mit Befestigungsring
TE CONNECTIVITY-Nr. 965687-1

(C) 8 COUPLING PART ACC. TO DIN 72585 / ISO 15170
Kupplungsseite nach DIN 72585 / ISO 15170

(C1) 9 IN THE CASE OF NEW DESIGNS, THE DIMENSIONS OF THE CUT OFF SHOULD BE PLACED NEAR THE LOWER TOLERANCE LIMIT
Hinterwandmontage mit Befestigungsring
Bei Neukonstruktionen sollten die Masse des Blechausschnittes an die untere Toleranzgrenze gelegt werden

9 7 CUT OFF
(MATERIAL THICKNESS: 2.5+0.1 MM)
(C1) (C) Befestigungsausschnitt
(Materialstaerke: 2.5+0.1 mm)

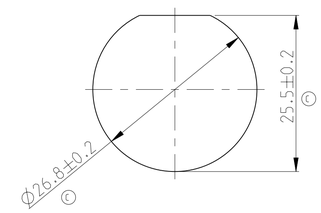

		1, 2, 3, 4			1, 2, 3, 4	1, 2	1, 2, 3	1, 2, 3, 4	1, 2	1, 2, 3	1, 2, 3, 4	USED CONTACT CAVITIES Kontaktbestuckung				
		D			D	D	D	D	D	D	D	REV.				
		4-967402-1			3-967402-1	2-967402-3	2-967402-2	2-967402-1	1-967402-3	1-967402-2	1-967402-1	ORDER-NO. Bestell-Nr. (D3)				
		X			X	X	X	X	X	X	X	2	1	SILICONE	GREEN Gruen (D)	SEALING Dichtung
		X			-	-	-	-	-	-	-	1	1	PBT-GF20	BLUE Blau	4POS. PIN HOUSING 4pol. Stiftgehaeuse (D2)
		-			X	-	-	-	-	-	-	1	1	PBT-GF20	GREEN Gruen	4POS. PIN HOUSING 4pol. Stiftgehaeuse (D2)
		-			-	X	-	-	-	-	-	1	1	PBT-GF20	GREY Grau	2POS. PIN HOUSING 2pol. Stiftgehaeuse
		-			-	-	X	-	-	-	-	1	1	PBT-GF20	GREY Grau	3POS. PIN HOUSING 3pol. Stiftgehaeuse
		-			-	-	-	X	-	-	-	1	1	PBT-GF20	GREY Grau	4POS. PIN HOUSING 4pol. Stiftgehaeuse
		-			-	-	-	-	X	-	-	1	1	PBT-GF20	BLACK Schwarz	2POS. PIN HOUSING 2pol. Stiftgehaeuse
		-			-	-	-	-	-	X	-	1	1	PBT-GF20	BLACK Schwarz	3POS. PIN HOUSING 3pol. Stiftgehaeuse
		-			-	-	-	-	-	-	X	1	1	PBT-GF20	BLACK Schwarz	4POS. PIN HOUSING 4pol. Stiftgehaeuse
(D1) (D2)		CODING 4 (BLUE) Kodierung 4 (blau)			CODING 3 (GREEN) Kodierung 3 (gruen)		CODING 2 (GREY) Kodierung 2 (grau)		CODING 1 (BLACK) Kodierung 1 (schwarz)			POS.	QTY Stueck	MATERIAL	COLOUR Farbe	DESCRIPTION Beschreibung

THIS DRAWING IS A CONTROLLED DOCUMENT.

DIMENSIONS: mm

TOLERANCES UNLESS OTHERWISE SPECIFIED: ACC. TO ISO 8015
1 PL ±0.2mm
2 PL ±
3 PL ±
5 PL ±
ANGLES ±2°

MATERIAL SEE TABLE
FINISH SEE TABLE

DWN	J. GRANZOW	06MAR1995
CHK	J. Hass	06MAR1995
APVD	Ch. Eberwein	10MAY2010
PRODUCT SPEC	108-18621-0	
APPLICATION SPEC	114-18255-0	
WEIGHT	15g	

TE Connectivity

NAME: 2.5MM PIN HOUSING, 2-4POS., ASSY
2.5mm Stiftstecker, 2-4pol., Assy
-

SIZE	CAGE CODE	DRAWING NO	RESTRICTED TO
A1	00779	C-967402	-

CUSTOMER DRAWING | SCALE 5:1 | SHEET 1 OF 1 | REV D4

4805 (3/11)
Pro/ENGINEER DRAWING

Mouser Electronics

Authorized Distributor

Click to View Pricing, Inventory, Delivery & Lifecycle Information:

TE Connectivity:

3-967402-1