THIS DRAWING IS UNPUBLISHED. RELEASED FOR PUBLICATION -,- .
© COPYRIGHT - BY TYCO ELECTRONICS CORPORATION. ALL RIGHTS RESERVED.

LOC	DIST
DF	DO

REVISIONS

P	LTR	DESCRIPTION	DATE	DWN	APVD
	C	UPDATE PER 0H2Y-0164-04	05-12-04	JDM	MKS

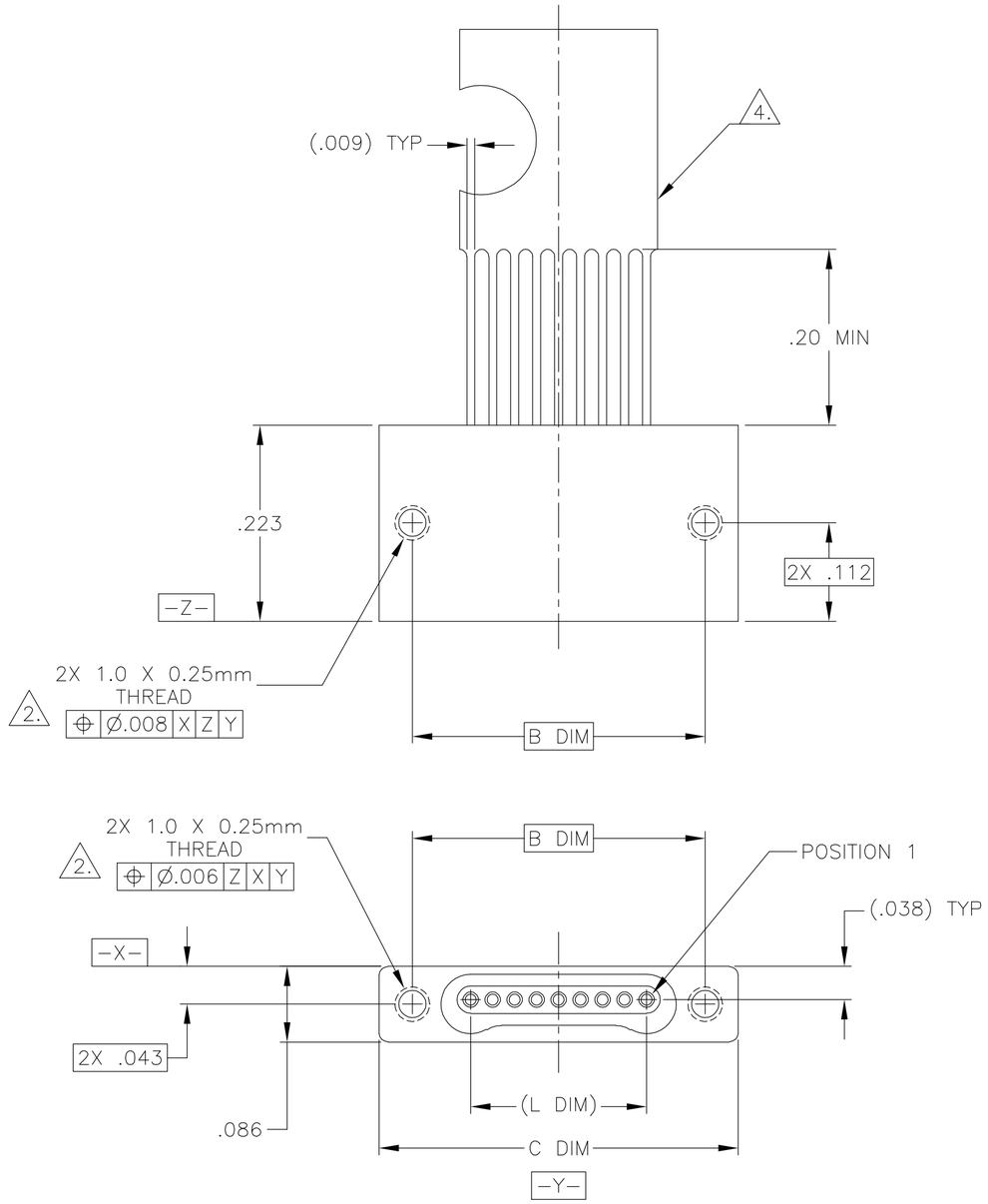

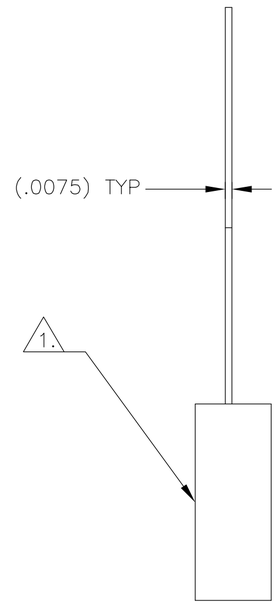

SIZE	B DIM	C DIM ±.0050	(L DIM)
05	.233	.3085	(.100)
09	.333	.4085	(.200)
15	.483	.5585	(.350)
25	.733	.8085	(.600)
37	1.033	1.1085	(.900)
51	1.383	1.4585	(1.250)

1. SHELL OPTIONS (TO BE SPECIFIED IN NANONICS PART NUMBER):
   METAL: 6061-T6 ALUMINUM, ELECTROLESS NICKEL PLATED PER MIL-C-26074 (STANDARD) OR GOLD PLATED PER MIL-G-45204
   303 STAINLESS STEEL, PASSIVATED PER SAE-AMS-QQ-P-35
   INSULATOR MATERIAL FOR ALL METAL SHELLS IS LIQUID CRYSTAL POLYMER (LCP) PER MIL-M-24519 OR PER ASTM D5138
   PLASTIC: LIQUID CRYSTAL POLYMER (LCP) PER MIL-M-24519 OR PER ASTM D5138
2. STANDARD 1.0 X 0.25mm JACKSCREW AND MOUNTING THREADS ARE SHOWN FOR REFERENCE ONLY AND MUST BE SPECIFIED IN THE NANONICS PART NUMBER WHEN REQUIRED. 1.2 X 0.25mm THREADS ALSO AVAILABLE.
3. MOUNTING HARDWARE IS AVAILABLE WITH THIS CONFIGURATION (NOT SHOWN). HARDWARE MUST BE SPECIFIED IN THE NANONICS PART NUMBER. CONSULT TYCO ELECTRONICS FOR DETAILS.
4. LEAD MATERIAL: HH BRASS, TIN LEAD PLATED 60/40 COMPOSITION PER SAE-AMS-P-81728
5. NANONICS TERMINATION CODE: L5
6. THIS DRAWING PREVIOUSLY IDENTIFIED AS NANONICS N10138/104

THIS DRAWING IS A CONTROLLED DOCUMENT.

DIMENSIONS: INCHES

TOLERANCES UNLESS OTHERWISE SPECIFIED:
0 PLC ± -
1 PLC ± -
2 PLC ± .010
3 PLC ± .005
4 PLC ± -
ANGLES ± 1°

MATERIAL: SEE NOTES
FINISH: SEE NOTES

DWN C. SCHOLL 03-23-01
CHK M. STORRY 03-27-01
APVD -
PRODUCT SPEC -
APPLICATION SPEC -
WEIGHT -

CUSTOMER DRAWING

tyco Electronics
Tyco Electronics Corporation
Harrisburg, PA 17105

NAME: RECEPTACLE ASSEMBLY, STRAIGHT LEADS, SINGLE ROW DUALOBE, PLASTIC OR METAL

SIZE	CAGE CODE	DRAWING NO	RESTRICTED TO
A2	00779	C-1589459	-

SCALE 8:1 SHEET 1 OF 1 REV C

1589459

Mouser Electronics

Authorized Distributor

Click to View Pricing, Inventory, Delivery & Lifecycle Information:

TE Connectivity:
SSM025L5RN