MATERIAL NO. LOOSE PIECE	ENG. NO.	MATERIAL NO. TAPE MOUNTED	ENG. NO.	STUD SIZE	±.003 "S"	"W" MAX. (A)	"C" MIN.	"L" MAX.	(A) "H" ±.020/0.51
190440137	B-101-12HD	190440138	B-101-12HDT	12	.515 (13.10)	.760 (19.30)	.611 (15.52)	1.280 (32.51)	1.556 (39.52)
190440139	B-101-14HD	--------	--------	14	.265 (6.73)				
190440140	B-101-38HD	--------	--------	38	.390 (9.91)				
190440141	B-101-56HD	--------	--------	56	.328 (8.33)				
190440142	B-101-76HD	190440229	B-101-76HDT	76	.453 (11.51)				
190440161	B-128-06HD	--------	--------	6	.146 (3.71)	.385 (9.78)	.303 (7.70)	.785 (19.94)	1.234 (31.34)
190440162	B-128-08HD	--------	--------	8	.173 (4.39)				
190440163	B-128-10HD	190440164	B-128-10HDT	10	.198 (5.03)				
190440166	B-130-10HD	190440022	B-130-10HDT	10	.198 (5.03)	.540 (13.72)	.393 (9.98)	.952 (24.18)	
190440167	B-130-14HD	190440023	B-130-14HDT	14	.265 (6.73)				
190440168	B-130-56HD	190440024	B-130-56HDT	56	.328 (8.33)				
190440172	B-136-04HD	--------	--------	4	.119 (3.02)	.292 (7.42)	(A) .303 (7.70)	.741 (18.82)	
190440173	B-136-06HD	190440026	B-136-06HDT	6	.146 (3.71)				
190440174	B-136-08HD	190440027	B-136-08HDT	8	.173 (4.39)				
190440180	B-140-10HD	---------	--------	10	.198 (5.03)	.598 (15.19)	.466 (11.84)	1.056 (26.82)	1.426 (36.22)
190440182	B-140-14HD	190440183	B-140-14HDT	14	.265 (6.73)				
190440184	B-140-38HD	190440185	B-140-38HDT	38	.390 (9.91)				
190440186	B-140-56HD	190440187	B-140-56HDT	56	.328 (8.33)				

(A) (A)

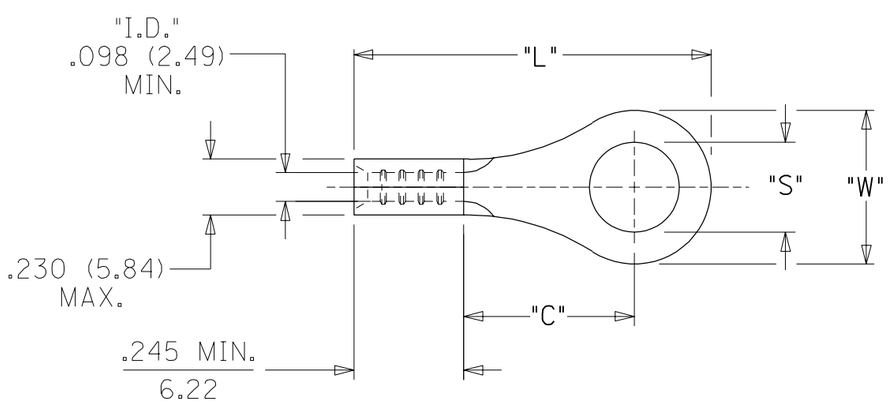

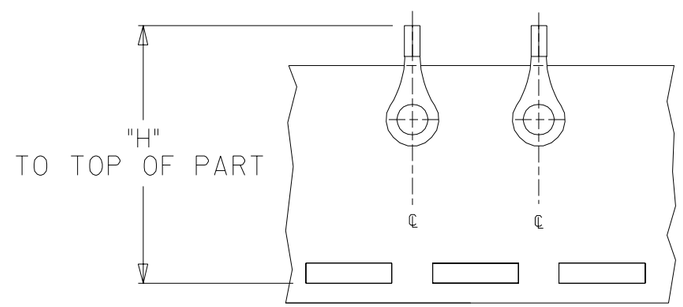

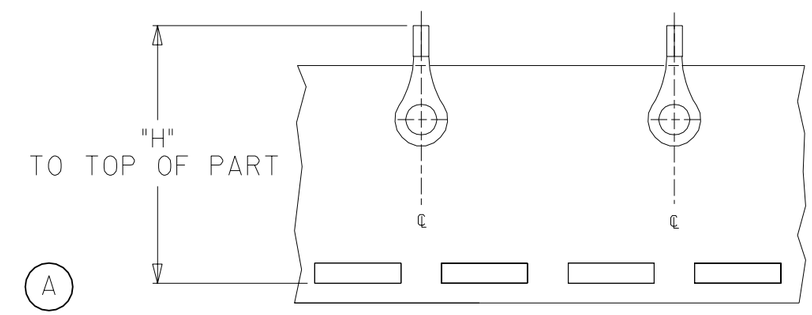

DOUBLE SPACE ON
B-101-**HDT AND B-140-**HDT
ONLY

SALES DRAWING

NOTE(S):

1. MATERIAL: COPPER (.050/1.27 THICK)
2. PLATING: ELECTROPLATE TIN.
3. ALL DIMENSIONS IN INCHES/(MM).

WIRE SIZE: 16-14 AWG
1.0 - 2.5 MM^2

UPDATE TO MX STDS.
EC NO. ETC2003-0203
DRWN: DLM 04/05/05
CH'K: HB 04/05/05
APPR: RWD 04/05/05
DESCRIPTION
A
REV

QUALITY SYMBOLS
MAJOR = Ø
CRITICAL (C) = Ø

GENERAL TOLERANCES: (UNLESS SPECIFIED)

	mm	INCH
4 PLACES	±0.----	±.----
3 PLACES	±0.---	±.005
2 PLACES	±0.13	±.010
1 PLACE	±0.25	±.---

ANGULAR: ±1/2°

DRAFT WHERE APPLICABLE MUST REMAIN WITHIN DIMENSIONS

SCALE NTS
DESIGN UNITS ☐mm ☒INCH
THIRD ANGLE PROJECTION
DIMENSIONS: ☐ mm/INCH ☒ INCH/mm ☐ mm ONLY
SHT REV
REVISE ON CAD ONLY

DRAWN BY & DATE DLM 03/02/28
CHECKED BY & DATE SB 03/02/28
APPROVED BY & DATE RWD 03/02/28
CAD FILENAME SD19044008.DGN

TITLE: RING TONGUE TERMINAL
HEAVY-DUTY KRIMPTITE
16-14 AWG

molex MOLEX INCORPORATED

MATERIAL NO. (SEE CHART)
DRAWING NO. SD-19044-008
SHEET NO. 1 OF 1

THIS DRAWING CONTAINS INFORMATION THAT IS PROPRIETARY TO MOLEX INCORPORATED AND SHOULD NOT BE USED WITHOUT WRITTEN PERMISSION.

SIZE B

Mouser Electronics

Authorized Distributor

Click to View Pricing, Inventory, Delivery & Lifecycle Information:

Molex:
19044-0172