THIS DRAWING IS UNPUBLISHED. RELEASED FOR PUBLICATION JAN ,2006.
© COPYRIGHT 2006 TE Connectivity ALL RIGHTS RESERVED.

REVISIONS

P	LTR	DESCRIPTION	DATE	DWN	APVD
	C1	ECR-17-009545	17JUL2017	AS	RS

NOTES:

1. PACK IN ACCORDANCE WITH AMP SPEC 107-3275
2. 100 TRAY PACK IN ACCORDANCE WITH AMP SPEC 107-3275
3. Ag PLATING
4. ELECTRICAL CHARACTERISTICS
   - FREQUENCY RANGE: DC – 11 GHz
   - NOMINAL IMPEDANCE: 50 Ohm
   - INSULATION RESISTANCE: 5000 MOhm
   - WORKING VOLTAGE: 500 Volts RMS at Sea Level
   - DIELECTRIC WITHSTAND VOLTAGE: 1500 Volts RMS Max
   - CONTACT RESISTANCE:
   - CENTRE CONTACT: 1.50 mOhm Max
   - OUTER CONTACT: 1.00 mOhm Max
   - INSERTION LOSS db: 0.20 Max
5. MECHANICAL CHARATERISTICS
   - DURABILITY: 500 Cycles Min
6. ENVIRONMENTAL CHARACTERISTICS
   - OPERATING TEMPERATURE: –65 to +165 DegC

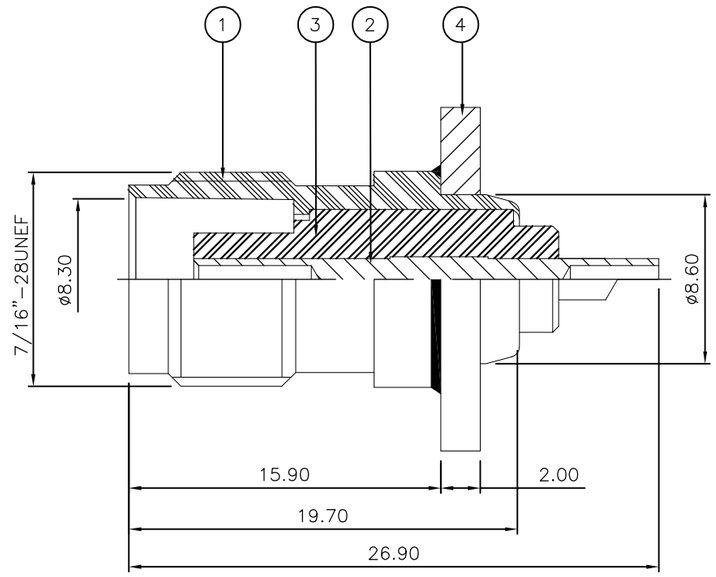

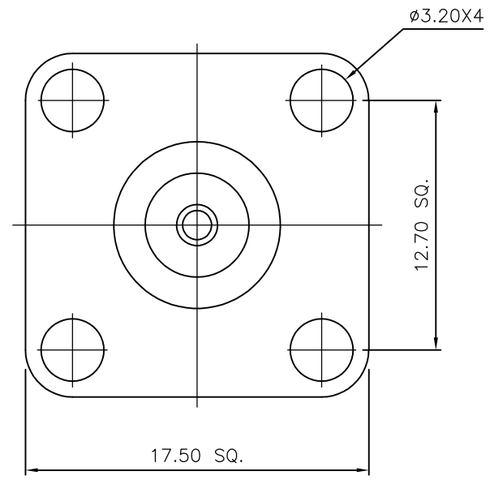

MOUNTING HOLES

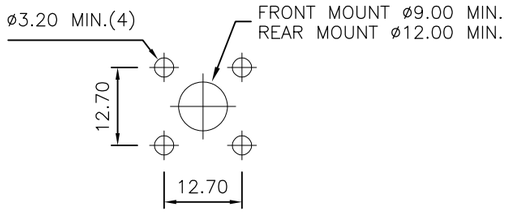

			OBSOLETE			
		1	1	BRASS (3)	FLANGE	4
		1	1	PTFE	INSULATION	3
		1	1	BRASS (3)	CONTACT	2
		1	1	BRASS (3)	BODY	1
		6--0	1--0	MATERIAL	DESCRIPTION	ITEM
		(2)	(1)			
QUANTITY PER ASSY				PARTS LIST		

THIS DRAWING IS A CONTROLLED DOCUMENT.

DIMENSIONS: mm

TOLERANCES UNLESS OTHERWISE SPECIFIED:
0 PLC ± –
1 PLC ± –
2 PLC ± –
3 PLC ± –
4 PLC ± –
ANGLES ± –

MATERIAL: SEE TABLE

FINISH: –

DWN J.SANDWELL 09JAN06
CHK S.PARLOW 09JAN06
APVD F.WHEELER-KING 09JAN06
PRODUCT SPEC —
APPLICATION SPEC —
WEIGHT 0.000000

TE Connectivity

NAME: TNC PANEL SOCKET 50 OHM
–
–

SIZE	CAGE CODE	DRAWING NO	RESTRICTED TO
A3	00779	C-1337472	—

CUSTOMER DRAWING

SCALE NTS | SHEET 1 OF 1 | REV C1