THIS DRAWING IS UNPUBLISHED. RELEASED FOR PUBLICATION -,- .
© COPYRIGHT - By - ALL RIGHTS RESERVED.

LOC	DIST
GP	00

REVISIONS

P	LTR	DESCRIPTION	DATE	DWN	APVD
	AE7	REVISED PER ECO-15-006593	27APR2015	LL	SH

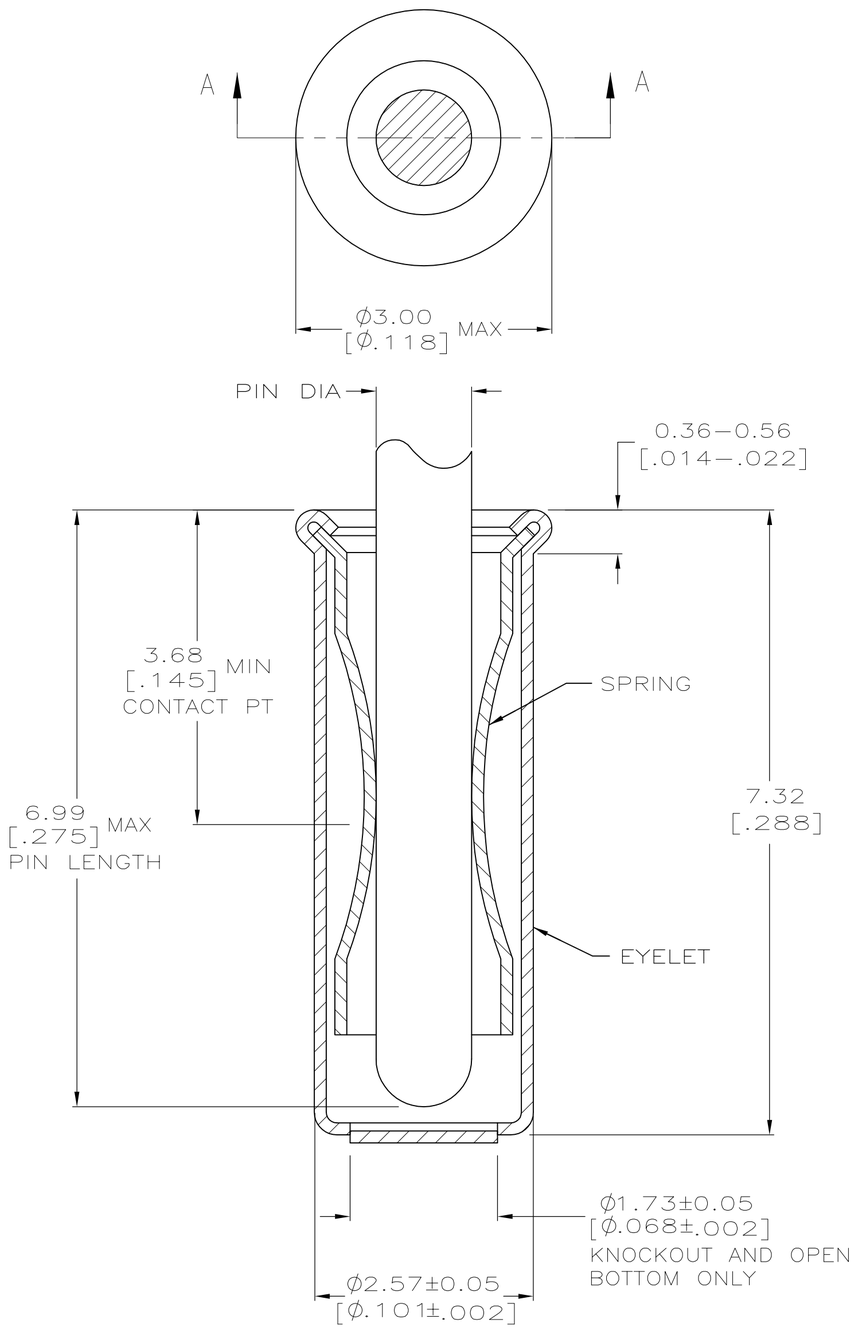

SECTION A–A

1. TIN PER MIL–T–10727 OR TIN LEAD .0.00254 [.000100] MIN THK.
2. GOLD PER MIL–G–45204, TYPE II, 0.00076 [.000030] MIN THK OVER NICKEL PER QQ–N–290 0.00028 [.000011] MIN THK ON CONTACT AREA.
3. GOLD FLASH PER MIL–G–45204, TYPE II, 0.13μm [.000005] MIN THK. OVER NICKEL PLATE PER QQ–N–290 0.51μm–1.52μm [.000020–.000060] EXT THK.
4. RECOMMENDED HOLE SIZE, PLATED OR UNPLATED:
   MACHINE INSERTION: 2.56±0.08 [.101±.003]
   HAND INSERTION: $2.62^{+0.10}_{-0.00}$ $\left[.103^{+.004}_{-.000}\right]$
5. APPLICATION TOOL PART NUMBER:
   MACHINE NO. 682127–6
   INSERTION HEAD NO. 682039–5
6. TO INSURE PROPER SPRING TENSION DO NOT EXCEED A 0.05 [.002] DIFFERENCE IN PIN DIA WHEN CHANGING TO A SMALLER PIN.
7. BOTTOM PLUG KNOCKOUT TOOL PART NUMBER 69729 WITH TIP PART NUMBER 69728–3.
8. TIN PER ASTM B 545, 0.00254[.000100] MIN THK.
9. MATERIAL: SPRING: BERYLLIUM COPPER, QQ–C–533.
   EYELET: COPPER, QQ–C–576.
10. PACKAGE: MAYLAR STRIP.

	BOTTOM TYPE	RECOMMENDED PIN DIA (6)	EYELET FINISH	SPRING FINISH	PART NO
(10)	CLOSED	1.27–1.45 [.050–.057]	GOLD (3)	GOLD (2)	7–50871–3
	CLOSED	1.07–1.24 [.042–.049]	TIN (8)	TIN (8)	6–50871–8
	CLOSED	1.07–1.24 [.042–.049]	TIN (8)	TIN (1)	3–50871–0
SUPSD BY 1–50871–4	CLOSED	1.27–1.45 [.050–.057]	TIN (1)	GOLD (2)	2–50871–8
SUPSD BY 50871–5		1.07–1.24 [.042–.049]			2–50871–7
OBSOLETE		1.42–1.65 [.056–.065]		TIN (1)	2–50871–6
	KNOCKOUT				2–50871–5
OBSOLETE	OPEN				2–50871–4
OBSOLETE	CLOSED		GOLD (3)	GOLD (2)	2–50871–3
					2–50871–2
OBSOLETE	KNOCKOUT		TIN (1)		2–50871–1
	OPEN		TIN (1)		1–50871–9
			GOLD (3)		1–50871–8
OBSOLETE	CLOSED	1.27–1.45 [.050–.057]	TIN (1)	TIN (1)	1–50871–7
OBSOLETE			GOLD (3)	GOLD (2)	1–50871–4
					1–50871–3
	OPEN				1–50871–0
	CLOSED	1.07–1.24 [.042–.049]	TIN (1)	TIN (1)	50871–8
	OPEN				50871–6
OBSOLETE	CLOSED		GOLD (3)	GOLD (2)	50871–5
					50871–4
	KNOCKOUT		TIN (1)		50871–3
	OPEN				50871–1
OBSOLETE			GOLD (3)		50871

50871

THIS DRAWING IS A CONTROLLED DOCUMENT.

DIMENSIONS: mm [INCHES]

TOLERANCES UNLESS OTHERWISE SPECIFIED:
0 PLC ± –
1 PLC ± –
2 PLC ± 0.20 [.008]
3 PLC ± –
4 PLC ± –
ANGLES ± –

MATERIAL (9)
FINISH

DWN R. TALLEY 20SEP05
CHK R. MILLER 8–22–91
APVD –
PRODUCT SPEC –
APPLICATION SPEC –
WEIGHT –

TE Connectivity

NAME
MINIATURE SPRING SOCKET ASSEMBLY
SERIES 5
–

SIZE	CAGE CODE	DRAWING NO	RESTRICTED TO
A2	00779	C–50871	–

CUSTOMER DRAWING | SCALE 20:1 | SHEET 1 OF 1 | REV AE7

1471–9 (3/11)

Mouser Electronics

Authorized Distributor

Click to View Pricing, Inventory, Delivery & Lifecycle Information:

TE Connectivity:

1-50871-0