THIS DRAWING IS UNPUBLISHED. RELEASED FOR PUBLICATION -,N/A.
© COPYRIGHT N/A BY TYCO ELECTRONICS CORPORATION. ALL RIGHTS RESERVED.

LOC	DIST
DF	SO

REVISIONS

P	LTR	DESCRIPTION	DATE	DWN	APVD
	W	REV PER ECO-05-002357	08-05	AA	DE

PART NO.	A 1	B 1	C 1	CAP COLOR	REMARKS	
849104-1	24.00 [609.6]	6.00 [152.4]	–	RED	3	OBSOLETE
849104-2	96.00 [2438.4]	6.00 [152.4]	–	RED	3	
849104-3	48.00 [1219.2]	6.00 [152.4]	–	RED	3	
849104-4	15.00 [381.0]	6.00 [152.4]	–	RED	3	OBSOLETE
849104-5	8.00 [203.2]	6.00 [152.4]	–	RED	3	
849104-6	120.00 [3048.0]	6.00 [152.4]	–	RED	3	
849104-7	240.00 [6096.0]	6.00 [152.4]	–	RED	3	OBSOLETE
849104-8	10.00 [254.0]	6.00 [152.4]	–	RED	3	
849104-9	72.00 [1828.8]	6.00 [152.4]	6.00 [152.4]	RED	3	OBSOLETE
1-849104-0	80.00 [2032.0]	20.00 [508.0]	20.00 [508.0]	RED	3	OBSOLETE
1-849104-1	26.00 [660.4]	6.00 [152.4]	6.00 [152.4]	RED	3	OBSOLETE
1-849104-2	14.00 [355.6]	6.00 [152.4]	6.00 [152.4]	RED	3	OBSOLETE
1-849104-3	144.00 [3657.6]	6.00 [152.4]	6.00 [152.4]	RED	3	OBSOLETE
1-849104-4	216.00 [5486.4]	6.00 [152.4]	6.00 [152.4]	RED	3	OBSOLETE
1-849104-5	18.00 [457.2]	6.00 [152.4]	–	RED	3	
1-849104-6	24.00 [609.6]	6.00 [152.4]	6.00 [152.4]	RED	3	OBSOLETE
1-849104-7	36.00 [914.4]	6.00 [152.4]	–	RED	3	
1-849104-8	300.00 [7620.0]	6.00 [152.4]	–	RED	3	OBSOLETE
1-849104-9	36.00 [914.4]	6.00 [152.4]	6.00 [152.4]	RED	3	
2-849104-0	180.00 [4572.0]	6.00 [152.4]	6.00 [152.4]	RED	3	OBSOLETE
2-849104-1	39.00 [990.6]	6.00 [152.4]	6.00 [152.4]	RED	3	OBSOLETE
2-849104-2	840.00 [21336.0]	6.00 [152.4]	6.00 [152.4]	RED	3	OBSOLETE
2-849104-3	600.00 [15240.0]	6.00 [152.4]	6.00 [152.4]	RED	3	OBSOLETE
2-849104-4	60.00 [1524.0]	6.00 [152.4]	6.00 [152.4]	RED	3	OBSOLETE
2-849104-5	19.00 [482.6]	6.00 [152.4]	–	GREEN	3	SUPERSEDED BY 447391-1
2-849104-6	27.00 [685.8]	6.00 [152.4]	–	GREEN	3	SUPERSEDED BY 447391-2
2-849104-7	35.00 [889.0]	6.00 [152.4]	–	GREEN	3	SUPERSEDED BY 447391-3
2-849104-8	42.00 [1066.8]	6.00 [152.4]	–	GREEN	3	SUPERSEDED BY 447391-4
2-849104-9	51.00 [1295.4]	6.00 [152.4]	–	GREEN	3	SUPERSEDED BY 447391-5
3-849104-0	59.00 [1498.6]	6.00 [152.4]	–	GREEN	3	SUPERSEDED BY 447391-6
3-849104-1	67.00 [1701.8]	6.00 [152.4]	–	GREEN	3	SUPERSEDED BY 447391-7
5-849104-3	48.00 [1219.2]	6.00 [152.4]	–	RED	6	
6-849104-7	36.00 [914.4]	6.00 [152.4]	–	RED	6	

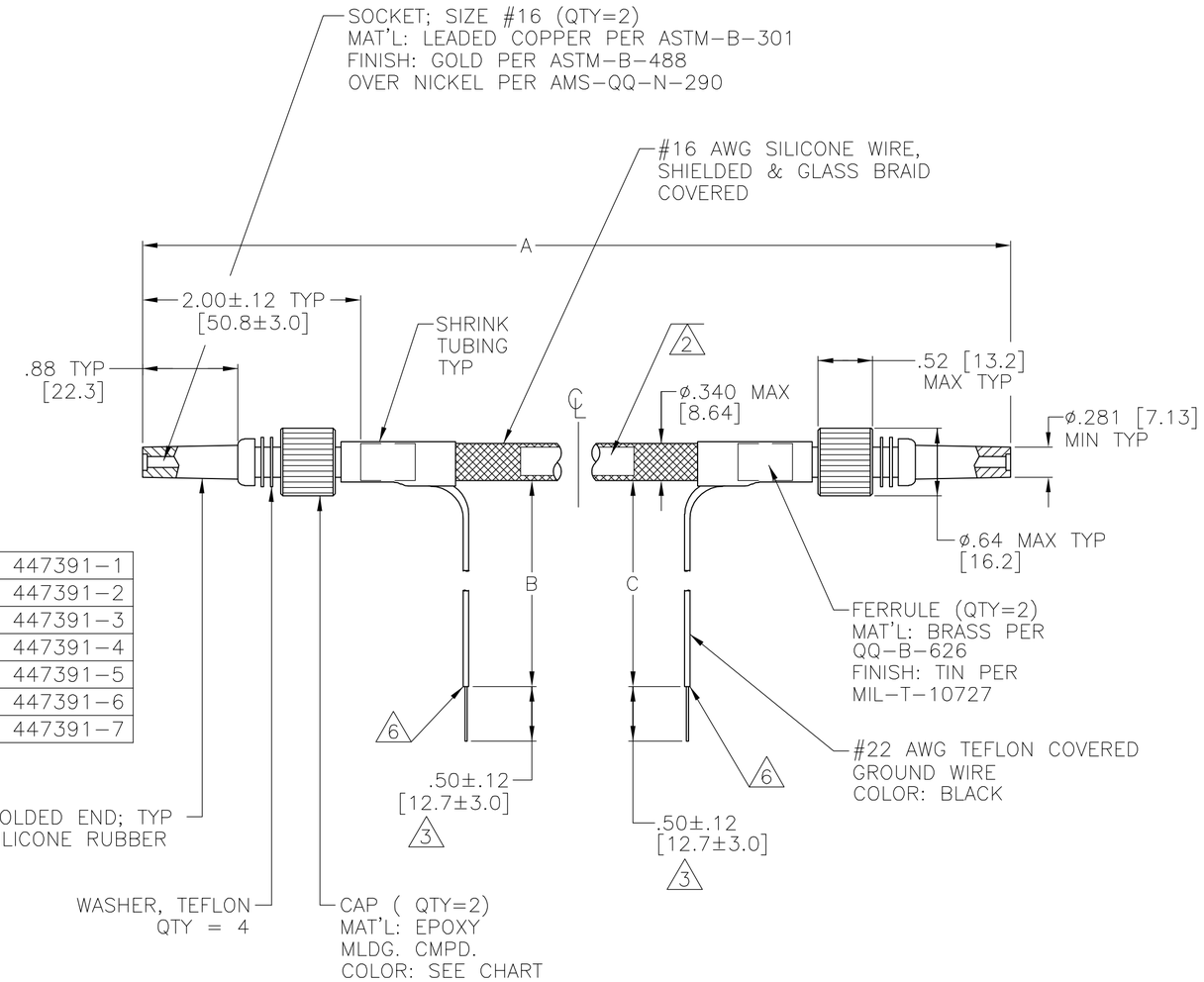

1. TOLERANCE OF LEAD LENGTH:
   UP TO 24 INCHES [609.6] = ±.12 [±3.0]
   24 INCHES [609.6] & UP = ±1%
2. MARKED PER MIL-STD-130.
3. PIGTAILS ARE SOLDER DIPPED.
4. TO MATE WITH AMP LGH-1
   RECEPTACLE WITH .88 [22.3] BARREL DEPTH.
5. OPERATING VOLTAGE: 20 KVDC AT 0 TO 70,000 FEET,
   -55°C TO 125°C.
6. INSULATION CUT, BUT NOT REMOVED.

THIS DRAWING IS A CONTROLLED DOCUMENT.

DIMENSIONS: INCHES [mm]

TOLERANCES UNLESS OTHERWISE SPECIFIED:
0 PLC ± –
1 PLC ± –
2 PLC ± .02 [0.5]
3 PLC ± –
4 PLC ± –
ANGLES ± –

MATERIAL: SEE CALLOUTS
FINISH: SEE CALLOUTS

DWN C.C.THOMAS 15-JUN-90
CHK D.OPLINGER 16-JUL-90
APVD D.OPLINGER 16-JUL-90
PRODUCT SPEC —
APPLICATION SPEC —
WEIGHT —

tyco Electronics
Tyco Electronics Corporation
Harrisburg, Pa 17105-3608

NAME
LEAD ASSY
DBL END, SHIELDED & GLASS BRAID JACKET
LGH-1

SIZE	CAGE CODE	DRAWING NO	RESTRICTED TO
A2	00779	C-849104	—

CUSTOMER DRAWING | SCALE 1:1 | SHEET 1 OF 1 | REV W

Mouser Electronics

Authorized Distributor

Click to View Pricing, Inventory, Delivery & Lifecycle Information:

TE Connectivity:

1-849104-5