NOTES:
1. ELECTRICAL:
   - VOLTAGE: 483V PER IEC 60664
     600V PER UL 2238
   - CURRENT: 8A
2. TEMP RATING: -20° TO +90°C
3. PROTECTION: IP67 (WHEN MATED)
4. UL CERTIFICATION: UL FILE NO. E152210
5 ALL DIMS ARE FOR REFERENCE
   UNLES NOTED OTHERWISE
6. PART NUMBER WITH "H" HAVE
   TWO ID MARKERS ONE ON EACH END

WIRING DIAGRAM

PART No. MATRIX

1	1	4	0	3	0	K	1	2	M	X	X	X	X

- 11 = A-SIZE double ended
- Poles: 4 = 4 Poles
- Heads style: 030 = Female straight - Male straight
- Cable: K12 = 4x16AWG TPE YE
- Units: M = Meter
- Length Examples: 005 = 0.5 m, 010 = 1 m, 050 = 5 m, 150 = 15 m, 200 = 20 m
- OPTIONAL: H= ID CARRIER

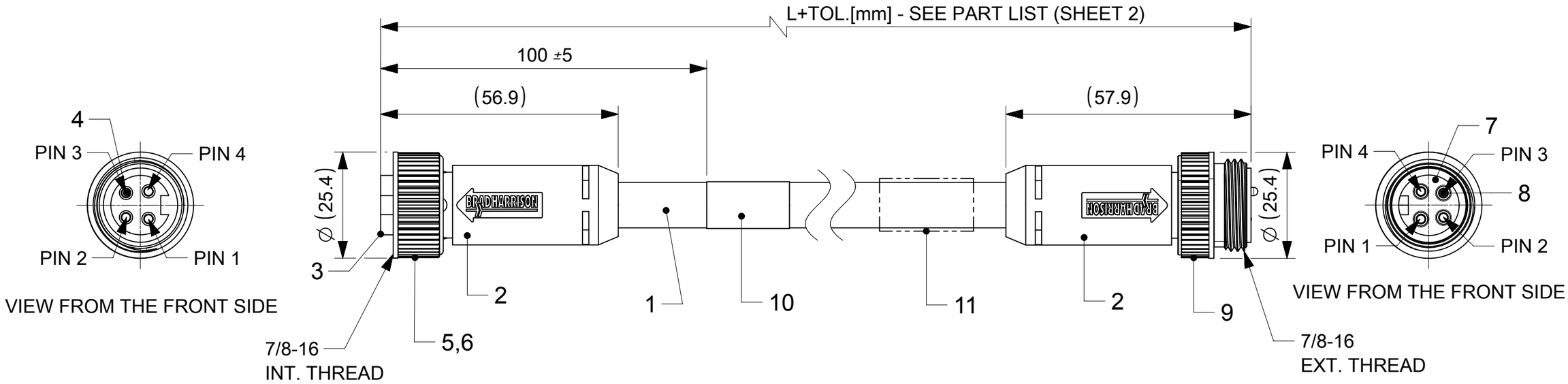

BILL OF MATERIALS

ITEM	QTY	DESCRIPTION	MATERIAL	FINISH/COLOR
11	2	ID CARRIER	PVC	-
10	1	LABEL WRAP	VINYL	YELLOW
9	1	COUPLING NUT A-SIZE EXT.	ZINC	BLACK
8	2	PIN CONTACT 16 AWG	COPPER ALLOY	Au-PLATED
7	1	HOUSING A-SIZE 5P MALE	ARNITEL	YELLOW
6	1	FRICTION RING A-SIZE	NYLON	GRAY
5	1	MC COUPLING NUT A-SIZE	ZINC	BLACK
4	2	MC SOCKET SLEEVE ASSY 16 AWG	COPPER ALLOY	Au-PLATED
3	1	HOUSING A-SIZE 5P FEMALE	ARNITEL	YELLOW
2	-	MOULDING MATERIAL	TPE	YELLOW
1	-	CABLE 16/4 TC-ER OD=11mm	TPE	YELLOW

DOCUMENT STATUS	P1	RELEASE DATE	2018/09/11 07:18:42

THIS DRAWING CONTAINS INFORMATION THAT IS PROPRIETARY TO MOLEX ELECTRONIC TECHNOLOGIES, LLC AND SHOULD NOT BE USED WITHOUT WRITTEN PERMISSION

SYMBOLS: = 0

DIMENSION UNITS: mm — SCALE: 1:1

GENERAL TOLERANCES (UNLESS SPECIFIED): ANGULAR TOL ± 0.5 °; 4 PLACES ±; 3 PLACES ±; 2 PLACES ± 0.05; 1 PLACE ± 0.1; 0 PLACES ±

DRAFT WHERE APPLICABLE MUST REMAIN WITHIN DIMENSIONS

CURRENT REV DESC:

EC NO: 604208
DRWN: MKOWALCZYK01 2018/09/10
CHK'D: MMATLA 2018/09/11
APPR: MMATLA 2018/09/11

INITIAL REVISION:
DRWN: MKOWALCZYK01 2018/09/10
APPR: MMATLA 2018/09/11

THIRD ANGLE PROJECTION | DRAWING: A3-SIZE | SERIES: 130010

molex

CSE MC 4P MA STR TPE FE STR XM

PRODUCT CUSTOMER DRAWING

DOCUMENT NUMBER	DOC TYPE	DOC PART	REVISION
1300100863	PSD	000	A

MATERIAL NUMBER	CUSTOMER	SHEET NUMBER
SEE SHEET 2	GENERAL MARKET	1 OF 2

6 5 4 3 2 1

PART LIST

MOLEX PN	ENGINEERING NO.	LENGTH + TOL.[mm]
1300100071	114030K12M700	70000 + 1400
1300100072	114030K12M800	80000 + 1600
1300100863	114030K12M005	500 + 45
1300100864	114030K12M010	1000 + 56
1300100865	114030K12M020	2000 + 89
1300100866	114030K12M030	3000 + 89
1300100867	114030K12M040	4000 + 165
1300100868	114030K12M050	5000 + 165
1300100869	114030K12M060	6000 + 165
1300100870	114030K12M070	7000 + 165
1300100871	114030K12M080	8000 + 317
1300100872	114030K12M090	9000 + 317
1300100873	114030K12M100	10000 + 317
1300100874	114030K12M110	11000 + 317
1300100875	114030K12M120	12000 + 317
1300100876	114030K12M130	13000 + 317
1300100877	114030K12M150	15000 + 610
1300100879	114030K12M170	17000 + 610
1300100880	114030K12M180	18000 + 610
1300100881	114030K12M190	19000 + 610
1300100882	114030K12M200	20000 + 610
1300100884	114030K12M230	23000 + 610
1300100885	114030K12M250	25000 + 610

MOLEX PN	ENGINEERING NO.	LENGTH + TOL.[mm]
1300100886	114030K12M300	30000 + 610
1300100887	114030K12M350	35000 + 700
1300100888	114030K12M380	38000 + 760
1300100889	114030K12M460	46000 + 920
1300100890	114030K12M540	54000 + 1080
1300100891	114030K12M610	61000 + 1220
1300101638	114030K12M400	40000 + 800
1300101683	114030K12M270	27000 + 610
1300101711	114030K12M900	90000 + 1800
1300101723	114030K12M340	34000 + 680
1300101724	114030K12M420	42000 + 840
1300101725	114030K12M500	50000 + 1000
1300101726	114030K12M570	57000 + 1140
1300101754	114030K12M600	60000 + 1200
1300101862	114030K12M015	1500 +56
1300108347	114030K12M005H	500 + 45
1300108348	114030K12M050H	5000 + 165
1300108350	114030K12M060H	6000 + 165

THIS DRAWING CONTAINS INFORMATION THAT IS PROPRIETARY TO MOLEX ELECTRONIC TECHNOLOGIES, LLC AND SHOULD NOT BE USED WITHOUT WRITTEN PERMISSION

SYMBOLS		
= 0	DIMENSION UNITS: mm	SCALE: 1:1
= 0	GENERAL TOLERANCES (UNLESS SPECIFIED)	
= 0	ANGULAR TOL ±	0.5 °
= 0	4 PLACES ±	
= 0	3 PLACES ±	
= 0	2 PLACES ±	0.05
= 0	1 PLACE ±	0.1
= 0	0 PLACES ±	
= 0	DRAFT WHERE APPLICABLE MUST REMAIN WITHIN DIMENSIONS	

CURRENT REV DESC:

EC NO: 604208
DRWN: MKOWALCZYK01 2018/09/10
CHK'D: MMATLA 2018/09/11
APPR: MMATLA 2018/09/11

INITIAL REVISION:
DRWN: MKOWALCZYK01 2018/09/10
APPR: MMATLA 2018/09/11

THIRD ANGLE PROJECTION | DRAWING: A4-SIZE | SERIES: 130010

molex

CSE MC 4P MA STR TPE FE STR XM

PRODUCT CUSTOMER DRAWING

DOCUMENT NUMBER	DOC TYPE	DOC PART	REVISION
1300100863	PSD	000	A

MATERIAL NUMBER	CUSTOMER	SHEET NUMBER
SEE PART LIST	GENERAL MARKET	2 OF 2

DOCUMENT STATUS	P1	RELEASE DATE	2018/09/11 07:18:42

FORMAT: master-tb-prod-A4
REVISION: H
DATE: 2018/01/18

6 5 4 3 2 1

PART NO.	ENGINEERING NO.	FINISHED LENGTH
1300100863	114030K12M005	0.5M+44.5mm-0 [1'8"+1.75-0]
1300100864	114030K12M010	1.0M+55.6mm-0 [3'3"+2.19-0]
1300100865	114030K12M020	2.0M+88.9mm-0 [6'7"+3.50-0]

CHART

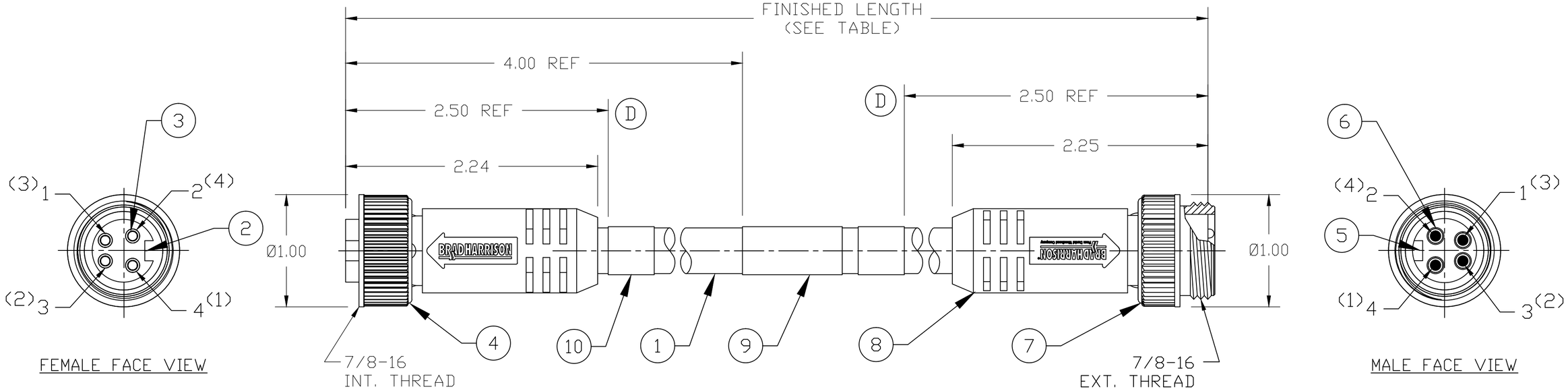

NOTES:
1. MATERIAL: SEE TABLE
2. FINISH: SEE TABLE
3. ELECTRICAL:
   VOLTAGE: 483V PER IEC 60664
   600V PER UL 2238
   CURRENT: 8A
4. TEMP RATING: -20° TO +90°C
5. PROTECTION: IP67 (WHEN MATED)
6. UL CERTIFICATION: UL FILE NO. E152210
7. ALL DIMS ARE FOR REFERENCE UNLESS NOTED OTHERWISE
8. PARTS WITH "H" IN MATRIX HAVE TWO ID CARRIERS ONE ON EACH SIDE (D)

CENELEC EN 50 044 PINOUT SHOWN
(SAE-J-1738A SHOWN IN PARENTHESIS)

4 (1)	BLACK	4 (1)
3 (2)	BLUE	3 (2)
1 (3)	BROWN	1 (3)
2 (4)	WHITE	2 (4)

MECHANICAL CHARACTERISTICS:

TORSIONAL FLEX TEST	20 MILLION CYCLES PER MIL-C-13777G
BEND FLEX TEST	20 MILLION CYCLES PER MIL-C-13777G
WELD SLAG RESISTANCE	WOODHEAD STANDARD S-300

114030K12XXXXH

LENGTH
M010 = 1 METER
M100 = 10 METER
F050 = 5 FEET
F500 = 50 FEET
T=100 METER
T001 = 101 METER
T010 =110 METER

ID CARRIER
H - SEE NOTE 8
BLANK - NO ID CARRIERS

CABLE LENGTH TOLERANCES
>.3M [1FT]: +19mm-0 [+.75in-0]
.3 - .9M [1 - 3FT]: +44.5mm-0 [+1.75in-0]
.9 - 1.8M [3 - 6FT]: +55.6mm-0 [+2.19in-0]
1.8 - 3.7M [6 - 12FT: +88.9mm-0 [+3.50in-0]
3.7 - 7.3M [12 - 24FT]: +165.1mm-0 [+6.50in-0]
7.3-14.6M [24 - 48FT]: +317.5mm-0 [+12.50in-0]
14.6 - 30.5M [48-100FT]: +622.3mm-0 [+24.50in-0]
OVER 30M [100FT] +2% OF FINISHED LENGTH

ITEM	DESCRIPTION	MATERIAL	FINISH
10	ID CARRIER	PVC	CLEAR
9	WRAP LABEL	VINYL	BLACK/YELLOW
8	OVERMOLD	ARNITEL	YELLOW
7	COUPLING, MALE	ZINC DIE-CAST	BLACK
6	CONTACT PIN	COPPER ALLOY	GOLD PLATED
5	MALE INSERT (A-SIZE)	ARNITEL	YELLOW
4	COUPLING, FEMALE	ZINC DIE-CAST	BLACK
3	CONTACT SOCKET	COPPER ALLOY	GOLD PLATED
2	FEMALE INSERT (A-SIZE)	ARNITEL	YELLOW
1	CABLE, 16/4 TC-ER (HI-FLEX)	TPE JACKET	YELLOW

ADD ID MARKERS
EC NO: IPG2018-0458
DRWN: MZIELINS 2018/04/10
CH'KD: ---
APPR: BWOODMAN2012/03/08
DESCRIPTION
REV D

QUALITY SYMBOL
▼=0
(C)=0

GENERAL TOLERANCES (UNLESS SPECIFIED)

	mm	INCH
4 PLACES	±---	±---
3 PLACES	±---	±---
2 PLACES	±---	±---
1 PLACE	±---	±---

ANGULAR ±---°

DRAFT WHERE APPLICABLE MUST REMAIN WITHIN DIMENSIONS

DIMENSION STYLE: INCH ONLY
SCALE: ---
DESIGN UNITS: INCH
THIRD ANGLE PROJECTION

DRAWN BY: VOU DATE: 2012/01/19
CHECKED BY: TWOLDEGE DATE: 2012/02/17
APPROVED BY: JFMURPHY DATE: 2012/03/08

TITLE: MINI-CHANGE CORDSET 4P MALE/FEMALE ST/ST #16/4 TPE CABLE

molex MOLEX INCORPORATED

MATERIAL NO.: ---
DOCUMENT NO.: SD-130010-016
SHEET NO.: 1 0F 1
SIZE: C

THIS DRAWING CONTAINS INFORMATION THAT IS PROPRIETARY TO MOLEX INCORPORATED AND SHOULD NOT BE USED WITHOUT WRITTEN PERMISSION

Mouser Electronics

Authorized Distributor

Click to View Pricing, Inventory, Delivery & Lifecycle Information:

Molex:
1300100873