THIS DRAWING IS UNPUBLISHED. RELEASED FOR PUBLICATION - -, .
© COPYRIGHT - By - ALL RIGHTS RESERVED.

LOC	DIST
GP	00

REVISIONS

P	LTR	DESCRIPTION	DATE	DWN	APVD
	M	REVISED PER ECO-15-004948	27APR2015	AP	SB

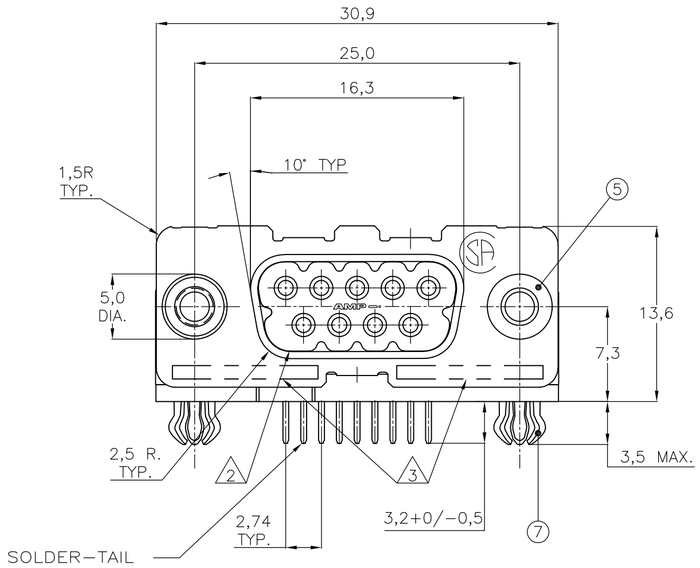

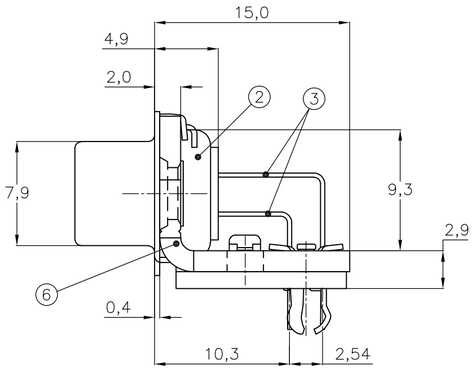

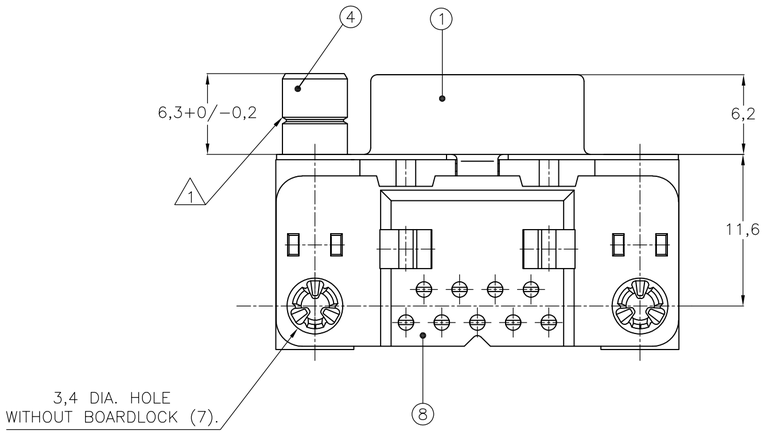

	ITEM NO.	DESCRIPTION OF ACCESSORY	106505-2	1-106505-2	2-106505-2	3-106505-2	4-106505-2	5-106505-2	6-106505-2	7-106505-2	8-106505-2	9-106505-2
ACCESSORIES	5	BUSHING WITH THROUGH-HOLE 3,1 DIA.	2					2				
	5	BUSHING WITH INNER THREAD 4-40 UNC		2					2			
	5	BUSHING WITH INNER THREAD M3			2					2		
	4	FEMALE SCREWLOCK WITH 4-40 UNC				2					2	
	4	FEMALE SCREWLOCK WITH M3					2					2
	7	BOARDLOCK	2	2	2	2	2					
							OBSOLETE			OBSOLETE		OBSOLETE

△1 GROOVE INDICATES VERSION WITH 4-40 UNC INNER THREAD; WITHOUT GROOVE INDICATES VERSION WITH M3 INNER THREAD.

△2 CAVITY IDENTIFICATION AT FRONT SIDE ONLY.

△3 PART NUMBER AND DATE CODE.

4. AIR AND CREEPAGE DISTANCES ACCORDING TO DIN 41652.

△5 CONTACT FINISH: GOLD FLASH OVER PALLADIUM NICKEL PLATE OR GOLD PLATE ON MATING SURFACES, TIN PLATE ON THE SOLDER-TAILS, NICKEL UNDERPLATE ON THE ENTIRE CONTACT. MATING SURFACE FINISH MEETS PERFORMANCE LEVEL 2 PER DIN 41652.

ITEM NO./MATERIAL :

①	SHELL	: BRIGHT TIN PLATED STEEL
②	HOUSING	: GLASS FILLED POLYESTER, COLOR : BLACK
③	CONTACTS	: PHOSPHOR BRONZE (PLATING : SEE NOTES ABOVE)
④	FEMALE SCREWLOCK	: TIN PLATED STEEL (INNER THREAD 4-40 UNC OR M3)
⑤	BUSHING	: TIN PLATED STEEL (INNER THREAD 4-40 UNC OR M3 OR 3,1 DIA THROUGH-HOLE)
⑥	BRACKET	: TIN PLATED STEEL
⑦	BOARDLOCK	: TIN PLATED PHOSPHOR BRONZE
⑧	POST ALIGNMENT PLATE	: GLASS FILLED NYLON COLOR : BLACK

RECOMMENDED P.C. BOARD HOLE-LAYOUT

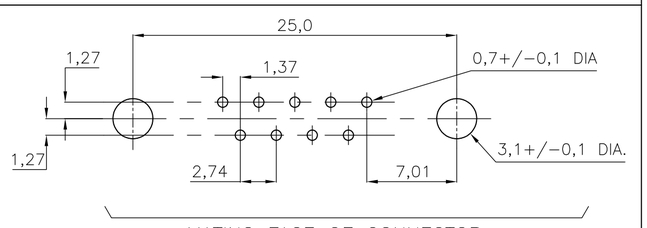

THIS DRAWING IS A CONTROLLED DOCUMENT.
DIMENSIONING AND TOLERANCING PER ASME Y14.5M-2009

DIMENSIONS: mm

TOLERANCES UNLESS OTHERWISE SPECIFIED:
0 PLC ± -
1 PLC ± 0.3
2 PLC ± 0.15
3 PLC ± -
4 PLC ± -
ANGLES ± 2°

MATERIAL -
FINISH -

DWN D. KESSLER 14JAN99
CHK W. SOOMERS -
APVD — -
PRODUCT SPEC —
APPLICATION SPEC —
WEIGHT —

TE Connectivity

NAME HD-20 SIZE 1 RIGHT ANGLE RECEPTACLE HEADER; MARK II+

SIZE	CAGE CODE	DRAWING NO	RESTRICTED TO
A2	00779	C-106505	—

CUSTOMER DRAWING | SCALE NTS | SHEET 1 OF 1 | REV M

106505

1471-9 (3/11)

Mouser Electronics

Authorized Distributor

Click to View Pricing, Inventory, Delivery & Lifecycle Information:

TE Connectivity:

8-106505-2