THIS DRAWING IS UNPUBLISHED. RELEASED FOR PUBLICATION -.- .
© COPYRIGHT - By - ALL RIGHTS RESERVED.

REVISIONS					
P	LTR	DESCRIPTION	DATE	DWN	APVD
	U	REV PERECO 18-019896	2-14-19	CT	DM

1. CONTACTS INCLUDED IN ASSEMBLY.
2. MATL: STEEL, PER ASTM-A-109.
3. FINISH: CADIUM PER QQ-P-416.
4. CONTACT
   BODY MATL: BERYLLIUM COPPER PER ASTM-B-197.
   BODY FINISH: PLATED GOLD, .000050 MIN THK PER MIL-G-45204 OVER NICKEL, .000050 MIN THK PER QQ-N-290.
   HOOD MATL: STAINLESS STEEL PER ASTM-A-167.
   HOOD FINISH: PASSIVATED PER ASTM-A-380
5. FINISH: PLATED ZINC .00020 MIN THK PER ASTM-B-633. YELLOW CHROMATE FINISH.
6. MATL: BRASS PER ASTM-B-36.
7. FINISH: PLATED GOLD, .000050 MIN THK PER MIL-G-45204 OVER COPPER, .000100 MIN THK PER MIL-C-14550.
8. CONTACT
   BODY MATL: BERYLLIUM COPPER PER ASTM-B-197.
   BODY AND HOOD FINISH: PLATED GOLD, .000050 MIN THK PER MIL-G-45204 OVER COPPER, .000100 MIN THK PER MIL-C-14550.
   HOOD MATL: BRASS PER ASTM-B-36
9. FINISH: PLATED ZINC PER ASTM-B-633 .000200 MIN THK WITH SUPPLEMENTARY CHROMATE (Cr2+).

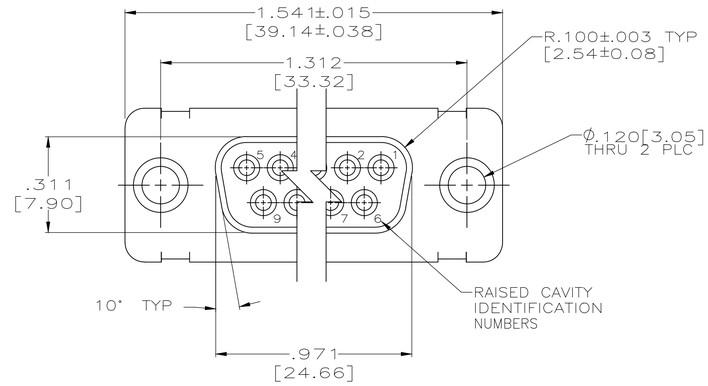

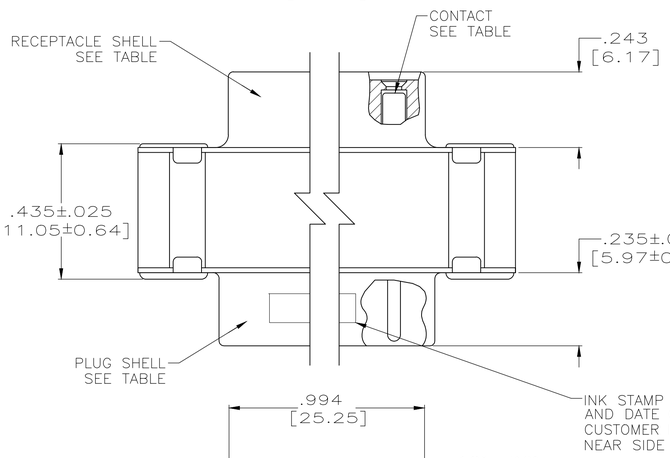

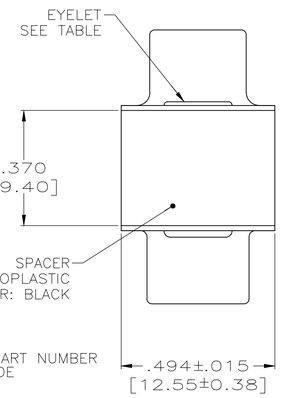

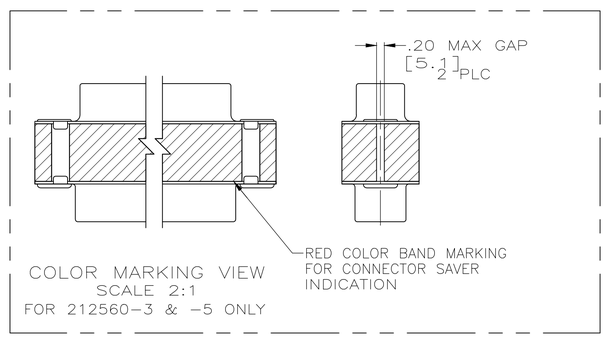

COLOR MARKING VIEW
SCALE 2:1
FOR 212560-3 & -5 ONLY

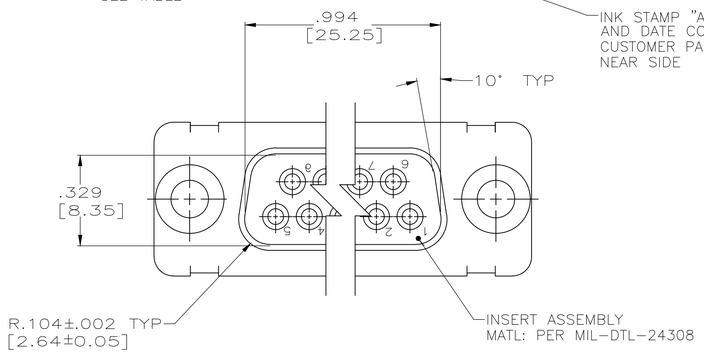

	EYELET	SHELLS	CONTACT	CUSTOMER P/N	PART NO.
	6 9	2 9	4	–	5-212560-1
	6 7	7 6	4	PT2-111-8	1-212560-2
	6 7	7 6	4	4U884 SOCN R10002677-0102	212560-5
OBSOLETE	– –	– –	–	–	212560-4
	6 7	7 6	4	(1J02-102)	212560-3
	6 7	7 6	8	–	212560-2
	6 5	2 3	4	–	212560-1

THIS DRAWING IS A CONTROLLED DOCUMENT.

DIMENSIONS: INCHES

TOLERANCES UNLESS OTHERWISE SPECIFIED:
0 PLC ± –
1 PLC ± –
2 PLC ± –
3 PLC ± .005 [0.13]
4 PLC ± –
ANGLES ± –

MATERIAL –
FINISH –

DWN T. THOMPSON 11-07-94
CHK D. MANTIONE 11-07-94
APVD D. MANTIONE 11-07-94

PRODUCT SPEC –
APPLICATION SPEC –
WEIGHT 0

TE Connectivity

NAME CONNECTOR SAVER, AMPLIMITE
15 POSITION, SIZE 2, SERIES 109
–

SIZE	CAGE CODE	DRAWING NO	RESTRICTED TO
A1	00779	C-212560	–

CUSTOMER DRAWING | SCALE 4:1 | SHEET 1 OF 1 | REV U