THIS DRAWING IS UNPUBLISHED. RELEASED FOR PUBLICATION -,- .
© COPYRIGHT - By - ALL RIGHTS RESERVED.

LOC	DIST
FT	0

REVISIONS

P	LTR	DESCRIPTION	DATE	DWN	APVD
	P	REVISED PER ECO-11-004820	11MAR11	RK	HMR

MATERIAL:
HOUSING: POLYMIDE 6 UL94V-2.
COLOR: NATURAL(OFF WHITE).
TUBULAR CONTACT: BRASS, TIN PLATED.
SCREW: M3.5, STEEL, ZINC W/ NON-HEXAVALENT CHROMATE (CHROME III).
WIRE PROTECTOR: STAINLESS STEEL.

ELECTRICAL:
CURRENT RATING: 40A, 250V.
WIRE RANGE: 10-22 AWG.

CONTINUOUS WORKING TEMPERATURE 100°C.

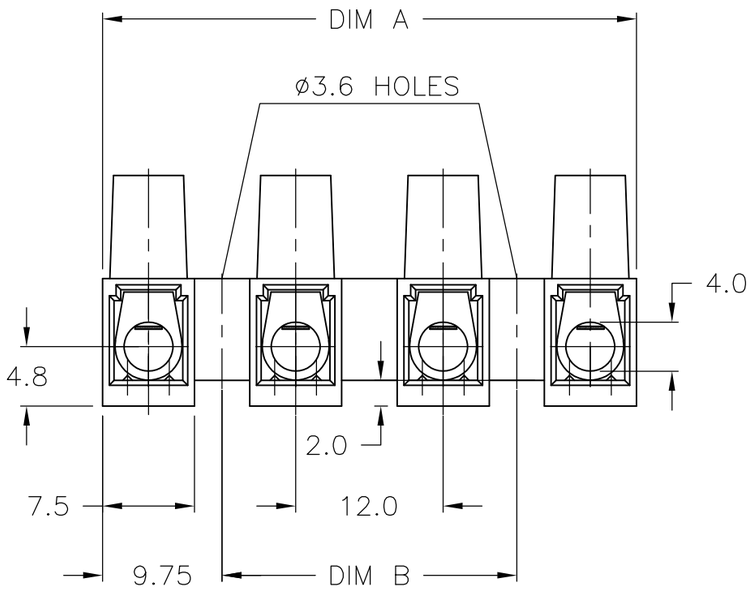

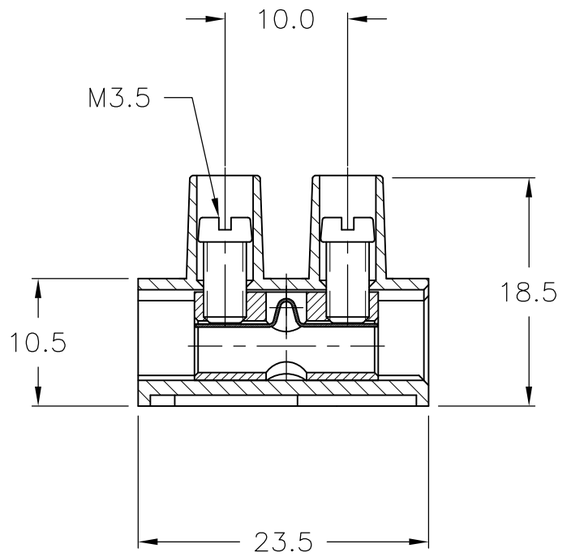

DIM B	DIM A	POSN	T & B PART NUMBER	PART NUMBER
120.0	139.5	12	TSB100012DS	1-1776302-2
108.0	127.5	11	TSB100011DS	1-1776302-1
96.0	115.5	10	TSB100010DS	1-1776302-0
84.0	103.5	9	TSB100009DS	1776302-9
72.0	91.5	8	TSB100008DS	1776302-8
60.0	79.5	7	TSB100007DS	1776302-7
48.0	67.5	6	TSB100006DS	1776302-6
36.0	55.5	5	TSB100005DS	1776302-5
24.0	43.5	4	TSB100004DS	1776302-4
12.0	31.5	3	TSB100003DS	1776302-3
-	19.5	2	TSB100002DS	1776302-2
-	7.5	1	TSB100001DS	1776302-1

THIS DRAWING IS A CONTROLLED DOCUMENT.

DIMENSIONS: mm

TOLERANCES UNLESS OTHERWISE SPECIFIED:

0 PLC	± -
1 PLC	± .3
2 PLC	± .25
3 PLC	± -
4 PLC	± -
ANGLES	± 2°

MATERIAL: -
FINISH: -

DWN S SCHLEGEL 3/21/05
CHK C RICHARD 3/21/05
APVD C RICHARD 3/21/05
PRODUCT SPEC —
APPLICATION SPEC —
WEIGHT —

TE Connectivity

NAME: 12.0 PITCH, W/ WIRE PROTECTOR

SIZE A3 | CAGE CODE 00779 | DRAWING NO C-1776302 | RESTRICTED TO —

CUSTOMER DRAWING | SCALE NTS | SHEET 1 OF 1 | REV P

Mouser Electronics

Authorized Distributor

Click to View Pricing, Inventory, Delivery & Lifecycle Information:

TE Connectivity:

1-1776302-0