THIS DRAWING IS UNPUBLISHED. RELEASED FOR PUBLICATION AUG ,2006.
© COPYRIGHT 2009 BY TYCO ELECTRONICS CORPORATION. ALL RIGHTS RESERVED.

| LOC | DIST |
|---|---|
| DW | — |

REVISIONS

| P | LTR | DESCRIPTION | DATE | DWN | APVD |
|---|---|---|---|---|---|
| | C | REVISED (ECO-11-013077) | 23JUN11 | JC | WK |

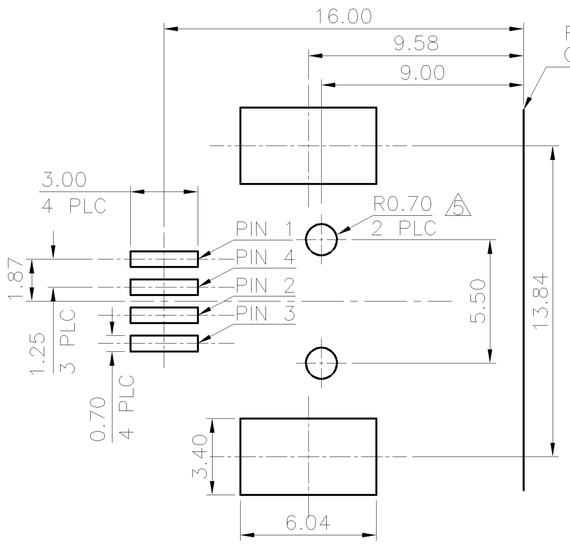


RECOMMENDED PCB LAYOUT

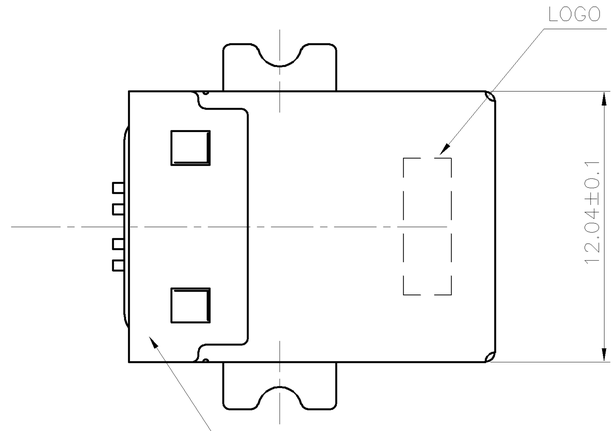


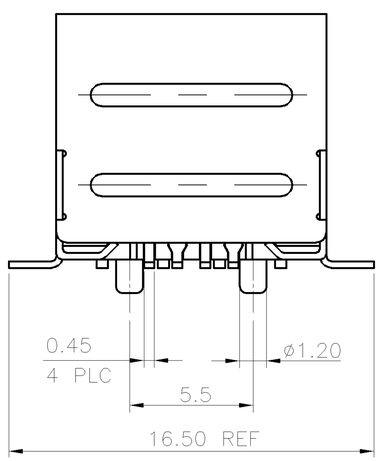


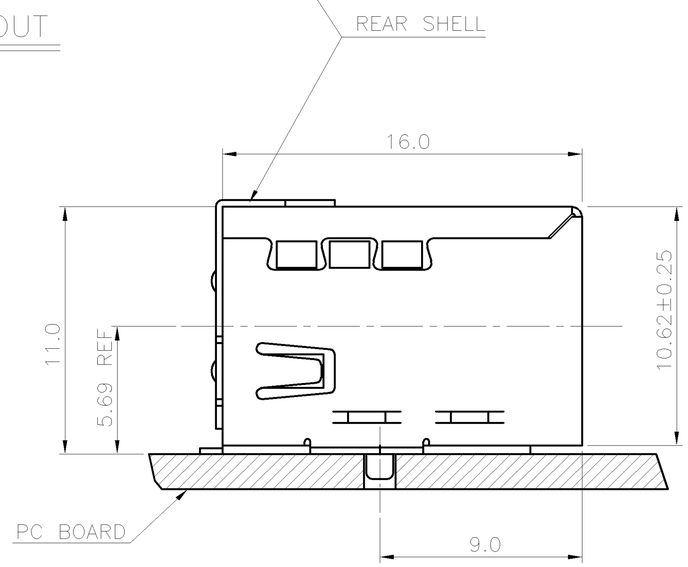


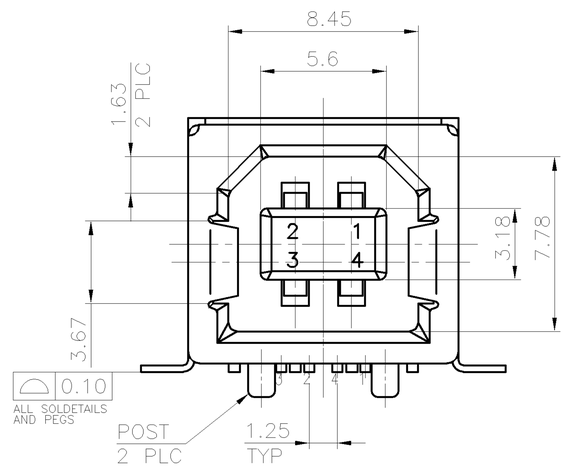


NOTE:

1. MATERIAL:
   HOUSING: THERMOPLASTIC HIGH TEMPERATURE, UL 94V-0, COLOR: BLACK.
   CONTACT: PHOSPHOR BRONZE, THICKNESS=0.25mm.
   SHELL: PHOSPHOR BRONZE, THICKNESS=0.30mm.
   REAR SHELL: STAINLESS, THICKNESS=0.30mm.
2. FINISH:
   CONTACT: ⚠A GOLD FLASH OVER 30u" MIN. PALLADIUM-NICKEL PLATED ON CONTACT AREA,
   ⚠B GOLD FLASH ON CONTACT AREA, 100u" MIN. MATTE-TIN PLATED ON SOLDER TAILS, 50u" MIN. NICKEL UNDERPLATED ALL OVER.
   SHELL: 30u"~ 90u" NICKEL PLATED OVER ALL.
3. PANEL THICKNESS OF 2.67mm MAXIMUM IF RECEPTACLE CONNECTOR IS MOUNTED BEHIND A PANEL.
4. REFLOW SOLDER CAPABLE TO 260°C PER TE SPEC 109-201, CONDITION B.

⚠5 PLEASE REMOVE POST HOLE ON PCB.
⚠6 NO EMBOSSED ON TOP SURFACE OF SHELL.
⚠7 OBSOLETE PARTS: OBSOLETE CIS STREAMLINING PER D.RENAUD/D.SINISI.

| REAR SHELL | PACKAGE | POST | FINISH | HSG'S COLOR | PART NUMBER |
|---|---|---|---|---|---|
| W/O ⚠6 | REEL | W/O ⚠5 | ⚠B | WHITE ⚠7 | ~~2-1734346-8~~ |
| | | | ⚠B | BLACK ⚠7 | ~~2-1734346-7~~ |
| | | | ⚠A | WHITE ⚠7 | ~~2-1734346-6~~ |
| | | | ⚠A | BLACK | 2-1734346-5 |
| | | W/ | ⚠B | WHITE ⚠7 | ~~2-1734346-4~~ |
| | | | ⚠B | BLACK | 2-1734346-3 |
| | | | ⚠A | WHITE ⚠7 | ~~2-1734346-2~~ |
| | | | ⚠A | BLACK | 2-1734346-1 |
| W/ | REEL | W/O ⚠5 | ⚠B | WHITE ⚠7 | ~~1-1734346-8~~ |
| | | | ⚠B | BLACK | 1-1734346-7 |
| | | | ⚠A | WHITE ⚠7 | ~~1-1734346-6~~ |
| | | | ⚠A | BLACK | 1-1734346-5 |
| | | W/ | ⚠B | WHITE ⚠7 | ~~1-1734346-4~~ |
| | | | ⚠B | BLACK | 1-1734346-3 |
| | | | ⚠A | WHITE | 1-1734346-2 |
| | | | ⚠A | BLACK | 1-1734346-1 |
| | TRAY | W/O ⚠5 | ⚠B | WHITE ⚠7 | ~~1734346-8~~ |
| | | | ⚠B | BLACK ⚠7 | ~~1734346-7~~ |
| | | | ⚠A | WHITE ⚠7 | ~~1734346-6~~ |
| | | | ⚠A | BLACK ⚠7 | ~~1734346-5~~ |
| | | W/ | ⚠B | WHITE | 1734346-4 |
| | | | ⚠B | BLACK | 1734346-3 |
| | | | ⚠A | WHITE ⚠7 | ~~1734346-2~~ |
| | | | ⚠A | BLACK | 1734346-1 |

THIS DRAWING IS A CONTROLLED DOCUMENT.

DIMENSIONS: MM

TOLERANCES UNLESS OTHERWISE SPECIFIED:

| | |
|---|---|
| 0 PLC | ± 0.5 |
| 1 PLC | ± 0.25 |
| 2 PLC | ± 0.15 |
| 3 PLC | ± 0.05 |
| 4 PLC | ± – |
| ANGLES | ± 3° |

MATERIAL: SEE NOTE
FINISH: SEE NOTE

DWN O. HU 26OCT2005
CHK S. HOU 26OCT2005
APVD W.J. KE 26OCT2005
PRODUCT SPEC 108-57538
APPLICATION SPEC —
WEIGHT —

TE Connectivity

NAME
USB CONNECTOR, SERIES B, 4 POSITIONS, R/A, SMT TYPE, WITH REAR SHELL

SIZE A3 | CAGE CODE 00779 | DRAWING NO C-1734346 | RESTRICTED TO —

CUSTOMER DRAWING | SCALE — | SHEET 1 OF 3 | REV C

THIS DRAWING IS UNPUBLISHED. RELEASED FOR PUBLICATION AUG ,2006.
© COPYRIGHT 2009 BY TYCO ELECTRONICS CORPORATION. ALL RIGHTS RESERVED.

| LOC | DIST |
|---|---|
| DW | — |

REVISIONS

| P | LTR | DESCRIPTION | DATE | DWN | APVD |
|---|---|---|---|---|---|
| | | SEE SHEET 1. | | | |

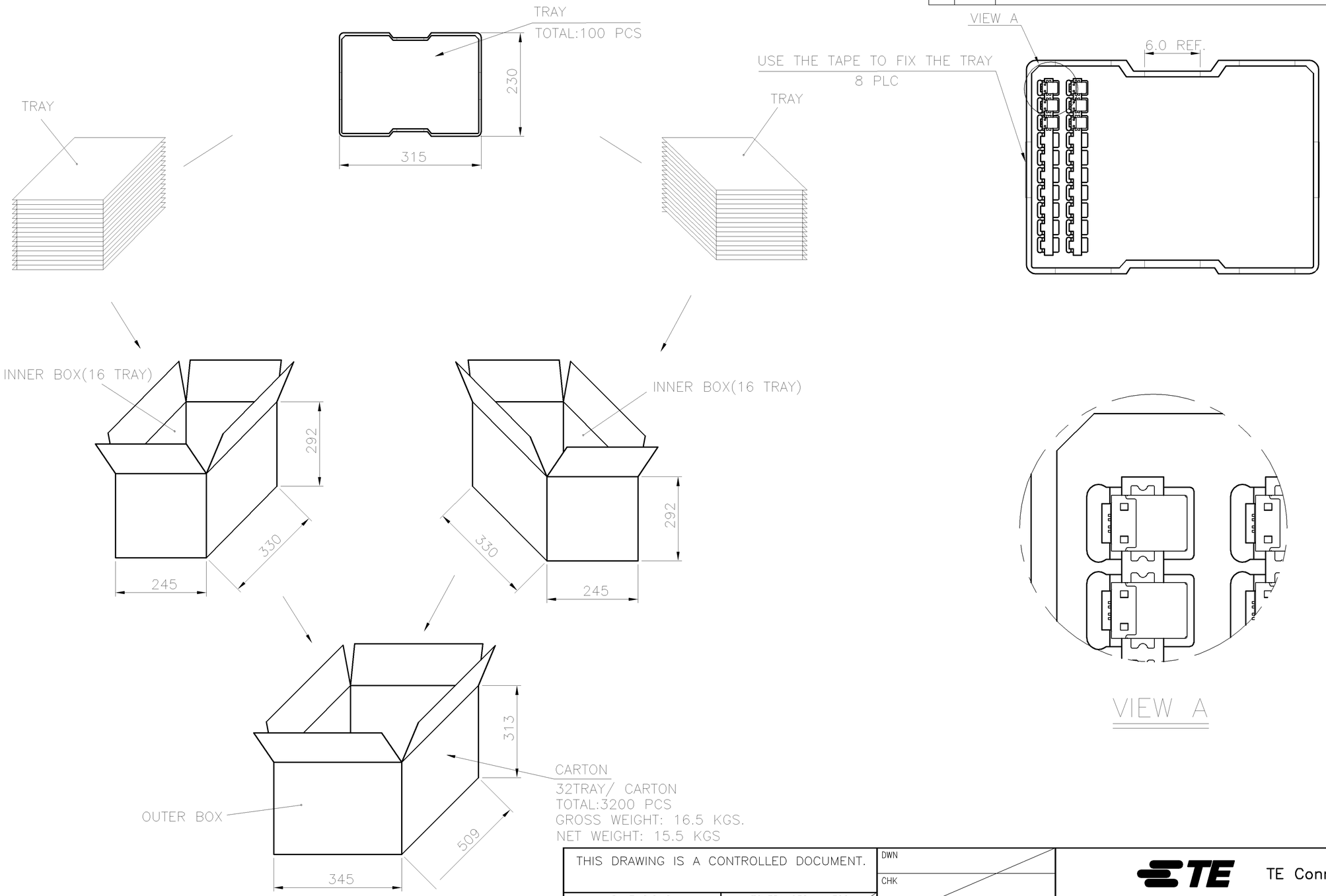


THIS DRAWING IS A CONTROLLED DOCUMENT.

DIMENSIONS: MM

TOLERANCES UNLESS OTHERWISE SPECIFIED:

| | |
|---|---|
| 0 PLC | ± – |
| 1 PLC | ± – |
| 2 PLC | ± – |
| 3 PLC | ± – |
| 4 PLC | ± – |
| ANGLES | ± – |

MATERIAL –

FINISH –

DWN

CHK

APVD

PRODUCT SPEC —

APPLICATION SPEC —

WEIGHT —

TE Connectivity

NAME

USB CONNECTOR, SERIES B, 4 POSITIONS, R/A, SMT TYPE, WITH REAR SHELL

| SIZE | CAGE CODE | DRAWING NO | RESTRICTED TO |
|---|---|---|---|
| A3 | 00779 | C-1734346 | — |

CUSTOMER DRAWING

| SCALE | SHEET | REV |
|---|---|---|
| — | 2 OF 3 | C |

THIS DRAWING IS UNPUBLISHED. RELEASED FOR PUBLICATION AUG ,2006.
© COPYRIGHT 2009 BY TYCO ELECTRONICS CORPORATION. ALL RIGHTS RESERVED.

| LOC | DIST |
|---|---|
| DW | — |

REVISIONS

| P | LTR | DESCRIPTION | DATE | DWN | APVD |
|---|---|---|---|---|---|
| | | SEE SHEET 1. | | | |

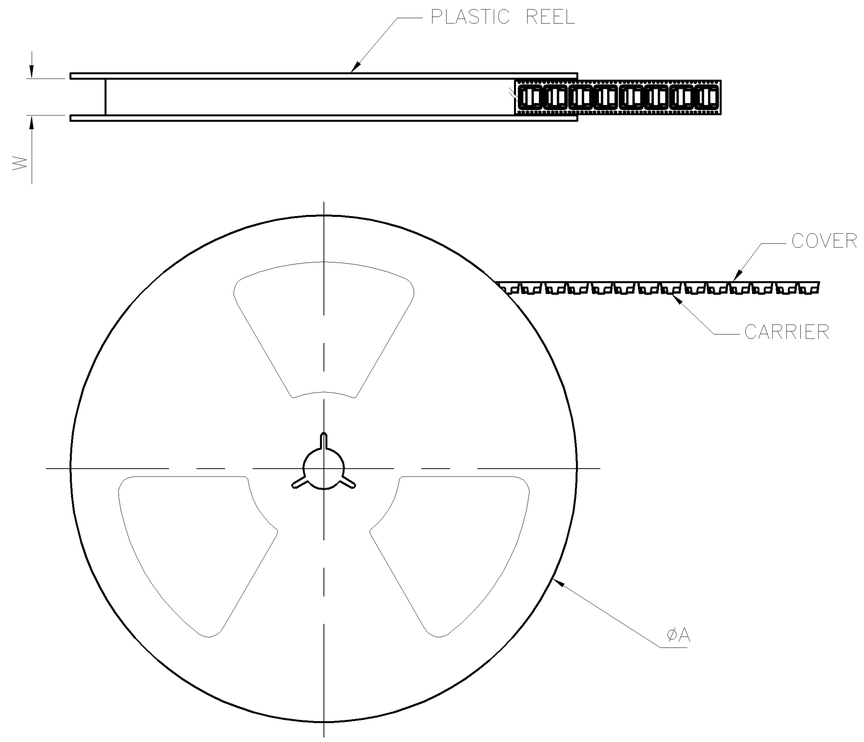


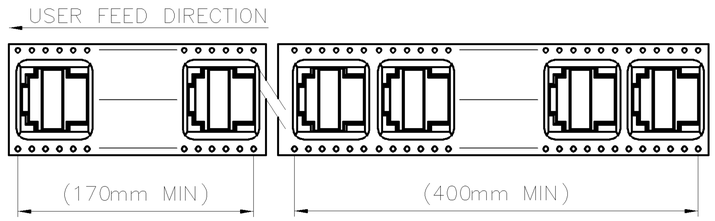


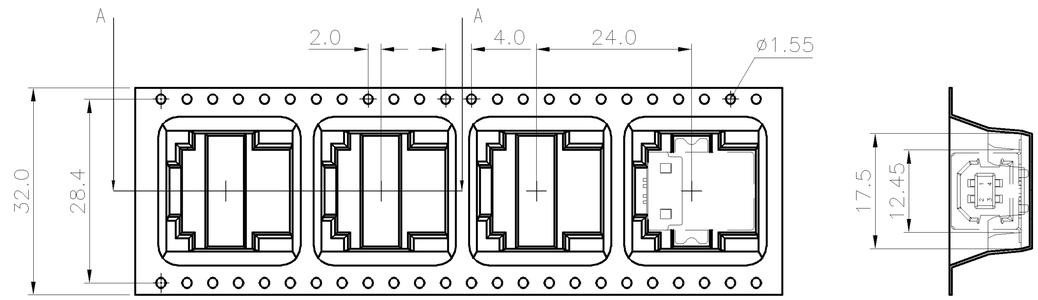


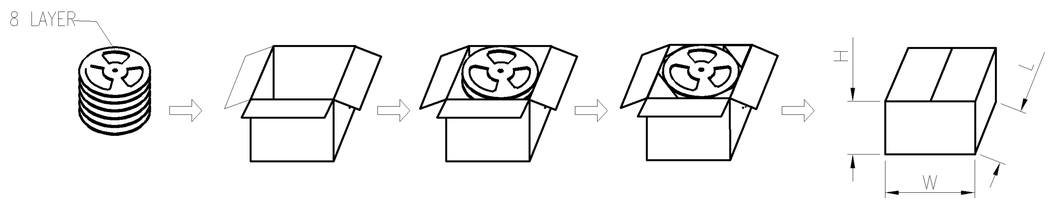


OUT BOX PACKAGE DIAGRAM DRAWING

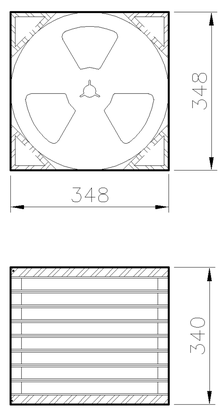


PACKING VIEW

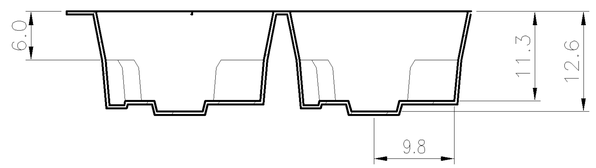


SECTION A–A

NOTE:
1. MATERIAL:
   EMBOSSED CARRIER :PS .
   COVER TAPE :PET.
   SHIPPING CARTON : CORRUGATED FIBERBOARD.
2. DIMENSION:
   REEL : W=32, ØA=330mm.
   SHIPPING CARTON : L=348, W=348, H=340mm.
3. QUANTITY:
   PRIMARY PACKING : 200 PCS/REEL.
   SECONARY PACKING : 8 REEL/CARTON(1,600PCS).
4. WEIGHT:
   NET WEIGHT : 9.5kg.
   GROSS WEIGHT : 10.5kg.

THIS DRAWING IS A CONTROLLED DOCUMENT.

DIMENSIONS: MM

TOLERANCES UNLESS OTHERWISE SPECIFIED:
0 PLC ± –
1 PLC ± –
2 PLC ± –
3 PLC ± –
4 PLC ± –
ANGLES ± –

MATERIAL –
FINISH –

DWN
CHK
APVD
PRODUCT SPEC —
APPLICATION SPEC —
WEIGHT —

TE Connectivity

NAME
USB CONNECTOR, SERIES B, 4 POSITIONS, R/A, SMT TYPE, WITH REAR SHELL

| SIZE | CAGE CODE | DRAWING NO | RESTRICTED TO |
|---|---|---|---|
| A3 | 00779 | C-1734346 | — |

CUSTOMER DRAWING | SCALE — | SHEET 3 OF 3 | REV C

# Mouser Electronics

Authorized Distributor

Click to View Pricing, Inventory, Delivery & Lifecycle Information:

TE Connectivity:

1734346-1