THIS DRAWING IS UNPUBLISHED. RELEASED FOR PUBLICATION 20
© COPYRIGHT 20 BY - ALL RIGHTS RESERVED.

REVISIONS					
P	LTR	DESCRIPTION	DATE	DWN	APVD
	J1	REVISED PER ECR-16-011494	23JUN2017	NK	CX

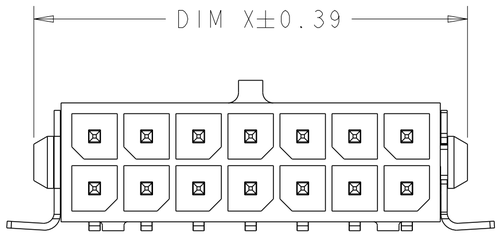

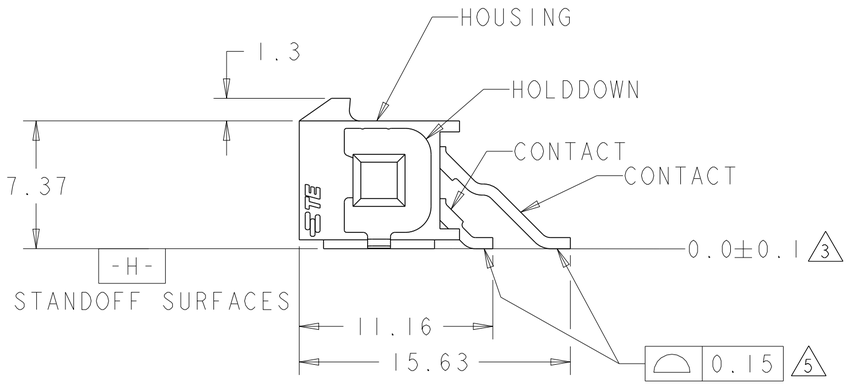

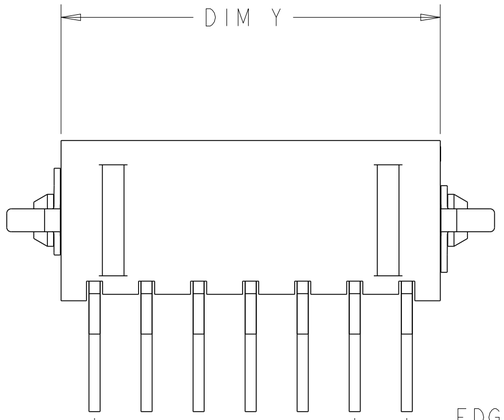

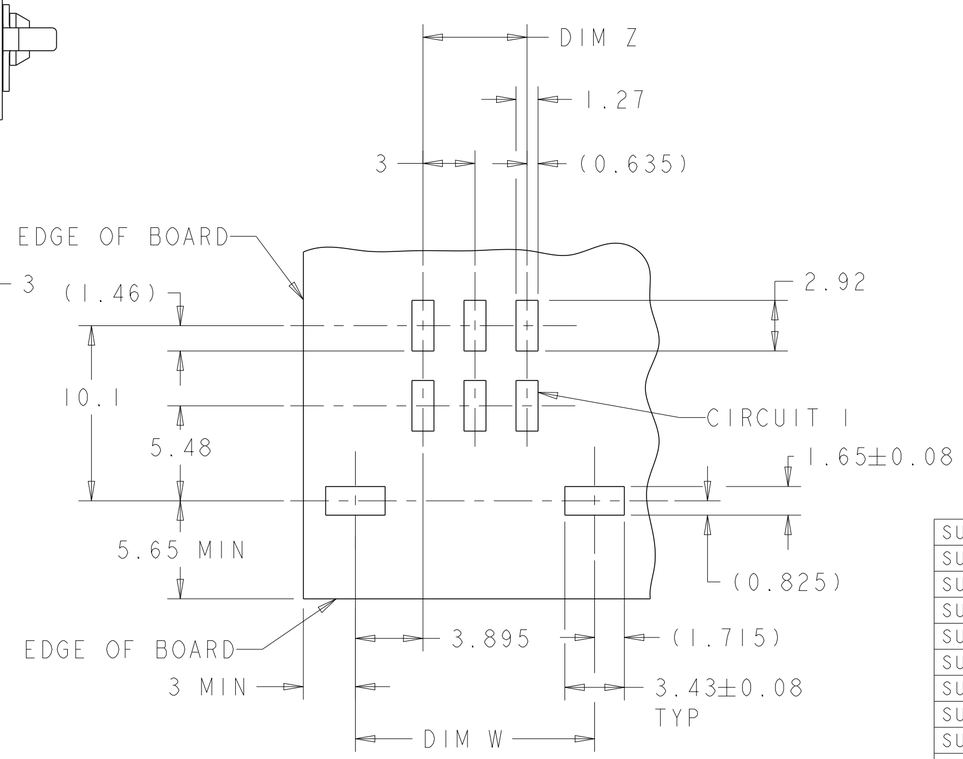

RECOMMENDED PCB LAYOUT 4
(COMPONENT SIDE)

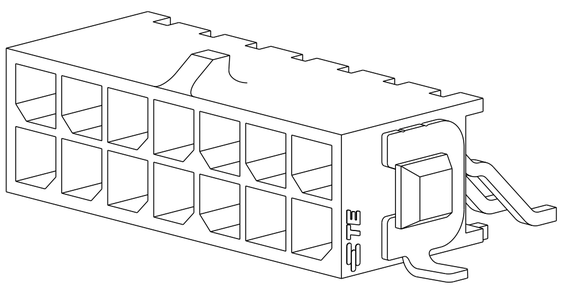

SCALE 5:1

1 MATERIAL;
CONTACTS - BRASS.
HOUSING - UL 94V-0 RATED HIGH TEMP NYLON, COLOR; BLACK.
HOLD DOWNS - PHOSPHOR BRONZE.

2 FINISH;
CONTACTS - 2.54µm MINIMUM TIN-LEAD OVER 1.27µm MINIMUM NICKEL.
HOLD DOWNS - 2.54µm TIN-LEAD.

3 DIMENSION APPLIES TO SOLDERTAIL SURFACES AND STANDOFF SURFACES.

4 RECOMMENDED PC BOARD THICKNESS OF 1.57.

5 ALL SOLDERTAILS AND HOLD DOWNS.

6 FINISH;
CONTACTS - 2.54µm MINIMUM MATTE TIN OVER 1.27µm MINIMUM NICKEL.
HOLD DOWNS - 2.54µm MINIMUM MATTE TIN.

	FINISH	DIM Y	DIM W	DIM Z	DIM X	NO. OF POSN.	ASSEMBLY
	6	36.86	40.79	33.00	40.00	24	5-794627-4
		33.86	37.79	30.00	37.00	22	5-794627-2
		30.86	34.79	27.00	34.00	20	5-794627-0
		27.86	31.79	24.00	31.00	18	4-794627-8
		24.86	28.79	21.00	28.00	16	4-794627-6
		21.86	25.79	18.00	25.00	14	4-794627-4
		18.86	22.79	15.00	22.00	12	4-794627-2
		15.86	19.79	12.00	19.00	10	4-794627-0
		12.86	16.79	9.00	16.00	8	3-794627-8
		9.86	13.79	6.00	13.00	6	3-794627-6
		6.86	10.79	3.00	10.00	4	3-794627-4
		3.86	7.79	-	7.00	2	3-794627-2
SUPERSEDED BY 5-794627-4	2	36.86	40.79	33.00	40.00	24	~~2-794627-4~~
SUPERSEDED BY 5-794627-2		33.86	37.79	30.00	37.00	22	~~2-794627-2~~
SUPERSEDED BY 5-794627-0		30.86	34.79	27.00	34.00	20	~~2-794627-0~~
SUPERSEDED BY 4-794627-8		27.86	31.79	24.00	31.00	18	~~1-794627-8~~
SUPERSEDED BY 4-794627-6		24.86	28.79	21.00	28.00	16	~~1-794627-6~~
SUPERSEDED BY 4-794627-4		21.86	25.79	18.00	25.00	14	~~1-794627-4~~
SUPERSEDED BY 4-794627-2		18.86	22.79	15.00	22.00	12	~~1-794627-2~~
SUPERSEDED BY 4-794627-0		15.86	19.79	12.00	19.00	10	~~1-794627-0~~
SUPERSEDED BY 3-794627-8		12.86	16.79	9.00	16.00	8	~~794627-8~~
SUPERSEDED BY 3-794627-6		9.86	13.79	6.00	13.00	6	~~794627-6~~
SUPERSEDED BY 3-794627-4		6.86	10.79	3.00	10.00	4	~~794627-4~~
SUPERSEDED BY 3-794627-2		3.86	7.79	-	7.00	2	~~794627-2~~

794627

THIS DRAWING IS A CONTROLLED DOCUMENT.

DIMENSIONS: mm

TOLERANCES UNLESS OTHERWISE SPECIFIED:
0 PLC ±-
1 PLC ±-
2 PLC ±0.13
3 PLC ±-
4 PLC ±-
ANGLES ±-

MATERIAL 1

FINISH SEE TABLE

DWN S. HOOVER 23-MAR-2005
CHK C. JONES 23-MAR-2005
APVD C. JONES 23-MAR-2005
PRODUCT SPEC -
APPLICATION SPEC -
WEIGHT -

TE Connectivity

NAME SURFACE MOUNT, RIGHT ANGLE, SURFACE MOUNT HOLD DOWN, ASSEMBLY, TIN HEADER, DUAL ROW, MICRO MATE-N-LOK (TM)

SIZE A2 | CAGE CODE 00779 | DRAWING NO C-794627 | RESTRICTED TO -

CUSTOMER DRAWING | SCALE 4:1 | SHEET 1 OF 1 | REV J1

1471-9 (3/13)

Mouser Electronics

Authorized Distributor

Click to View Pricing, Inventory, Delivery & Lifecycle Information:

TE Connectivity:

794627-8