THIS DRAWING IS UNPUBLISHED. RELEASED FOR PUBLICATION 20
© COPYRIGHT 20 - ALL RIGHTS RESERVED.

LOC	DIST
CM	00

REVISIONS

P	LTR	DESCRIPTION	DATE	DWN	APVD
	E	REVISED PER ECO-11-014381	06NOV11	KH	SM

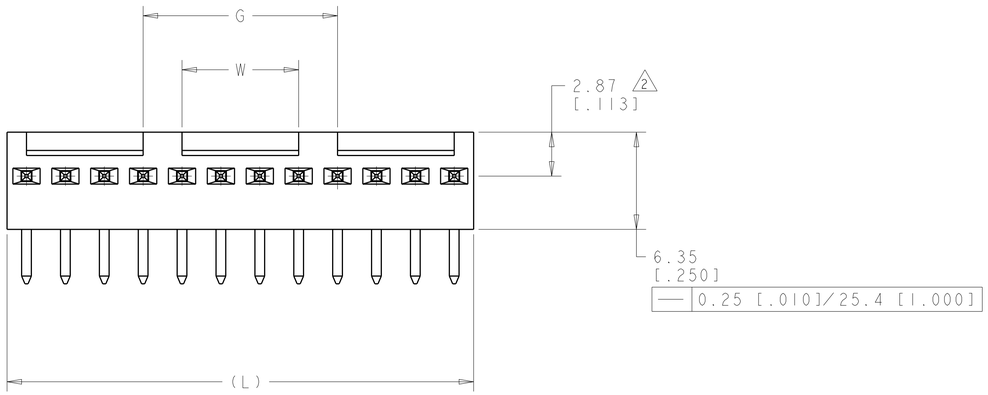

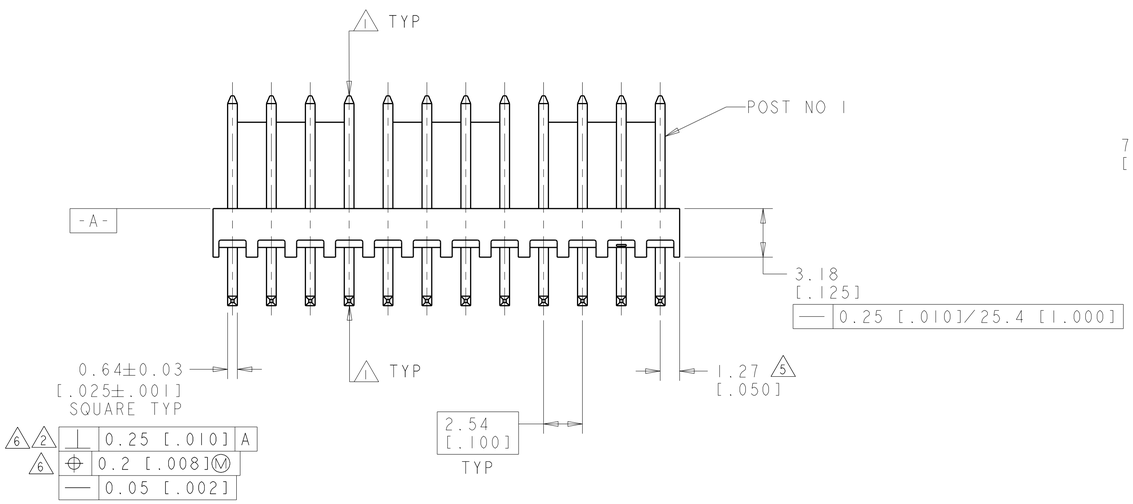

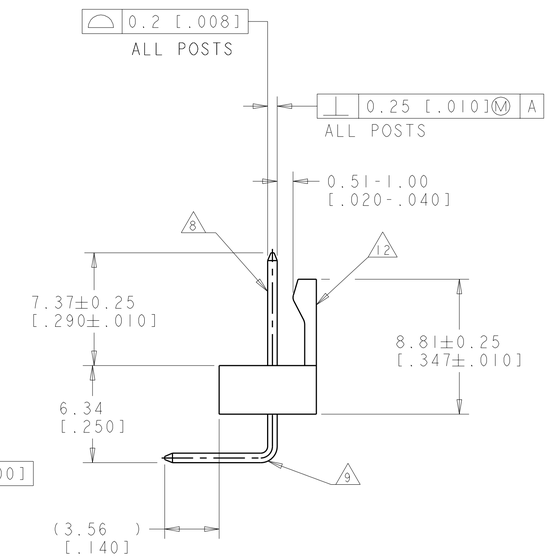

1. POST WITHSTAND 13 NEWTONS (3 LBS) MIN AXIAL FORCE IN DIRECTION SHOWN WITHOUT DISLODGING.
2. MEASURED AT -A-.
3. PARTS COMPLY WITH SOLDERABILITY SPEC 109-11-2.
4. MATERIAL: HEADER - PBT, GLASS FILLED.
   POST - COPPER ALLOY (SEE NOTES 8,9,& 13 FOR PLATING.)
5. COORDINATE DIMENSION APPLIES FROM CENTER OF ACTUAL FEATURE.
6. POSTS TO BE MEASURED WHEN STRIP HELD FLAT.
7. DIMENSIONS IN BRACKETS ARE IN INCHES.
8. PLATING: GOLD PLATE AREA, 0.00038 [.000015] GOLD OR 0.00008 [.000003] MIN GOLD FLASH OVER 0.00030 [.000012] PALLADIUM NICKEL, PER TE CONNECTIVITY'S DISCRETION, ALL SIDES, OVER NICKEL UNDERPLATE, 0.00127 [.000050] MIN, ALL SIDES AND ENTIRE LENGTH OF POST.
9. BRIGHT TIN/LEAD (93/7) PLATE AREA,0.00381-0.00889 [.000150-.000350] THICK, ALL FOUR SIDES, 3.56[.140] MIN.
10. TOLERANCES APPLY TO SOLDER SIDE OF BOARD.
11. ONE HOLE MAY BE UNDERSIZED 0.81-0.90 [.032-.035] DIAMETER FOR ASSEMBLY RETENTION DURING PROCESSING.
12. AMP LOGO,UL,AND CSA TRADEMARKS TO APPEAR ON THIS SURFACE.
13. MATTE TIN PLATE AREA,0.00381-0.00889 [.000150-.000350] THICK, ALL FOUR SIDES, 3.56[.140] MIN.
14. OBSOLETE PARTS: OBSOLETE CIS STREAMLINING PER D.RENAUD/D.SINISI

	W	G	L	NO OF POSN	PART NO
8 13	7.62 [.300]	12.70 [.500]	30.48 [1.200]	12	4-647628-2
	-	10.16 [.400]	27.94 [1.100]	11	4-647628-1
	-	7.62 [.300]	25.40 [1.000]	10	4-647628-0
	-	5.08 [.200]	22.86 [.900]	9	3-647628-9
	-	2.54 [.100]	20.32 [.800]	8	3-647628-8
	-	-	17.78 [.700]	7	3-647628-7
	-	-	15.24 [.600]	6	3-647628-6
	-	-	12.70 [.500]	5	3-647628-5
	-	-	10.16 [.400]	4	3-647628-4
	-	-	7.62 [.300]	3	3-647628-3
	-	-	5.08 [.200]	2	3-647628-2
8 9	7.62 [.300]	12.70 [.500]	30.48 [1.200]	12	1-647628-2
	-	10.16 [.400]	27.94 [1.100]	11	1-647628-1
	-	7.62 [.300]	25.40 [1.000]	10	1-647628-0
	-	5.08 [.200]	22.86 [.900]	9	647628-9
	-	2.54 [.100]	20.32 [.800]	8	647628-8
	-	-	17.78 [.700]	7	647628-7
	-	-	15.24 [.600]	6	647628-6
	-	-	12.70 [.500]	5	647628-5
	-	-	10.16 [.400]	4	647628-4
	-	-	7.62 [.300]	3	647628-3
	-	-	5.08 [.200]	2	647628-2

14 SUPERCEDED BY 4-647628-2
SUPERCEDED BY 4- -1
SUPERCEDED BY 4- -0
SUPERCEDED BY 3- -9
SUPERCEDED BY 3- -8
SUPERCEDED BY 3- -7
SUPERCEDED BY 3- -6
SUPERCEDED BY 3-647628-5

14 SUPERCEDED BY 3-647628-3

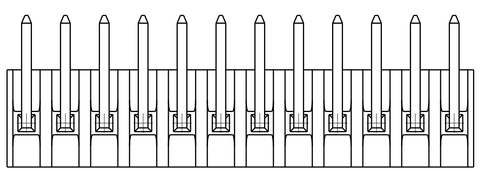

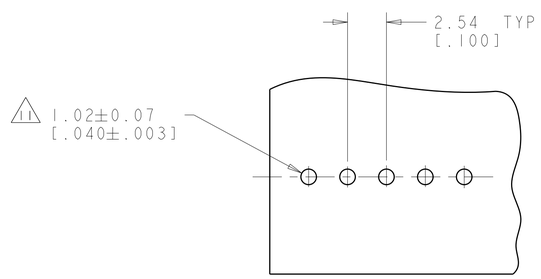

RECOMMENDED MOUNTING HOLE PATTERN 10
FOR 1.57±0.20[.062±.008] THICK P.C. BOARD

METRIC

THIS DRAWING IS A CONTROLLED DOCUMENT.

DIMENSIONS: mm[INCHES]

TOLERANCES UNLESS OTHERWISE SPECIFIED:
0 PLC ±-
1 PLC ±-
2 PLC ±0.13[.005]
3 PLC ±-
4 PLC ±-
ANGLES ±0°30'

MATERIAL - 4
FINISH - 4

DWN K WHITAKER 06-JAN-2003
CHK D BOSSI 06-JAN-2003
APVD D BOSSI 06-JAN-2003

PRODUCT SPEC -
APPLICATION SPEC -
WEIGHT -

TE Connectivity

NAME MTA-100 HEADER ASSEMBLY, FRICTION LOCK, ,025 SQUARE,RIGHT ANGLE, FRONT BEND POST,.000015 GOLD

SIZE	CAGE CODE	DRAWING NO	RESTRICTED TO
A1	00779	C-647628	-

CUSTOMER DRAWING | SCALE 5:1 | SHEET 1 OF 1 | REV E

Mouser Electronics

Authorized Distributor

Click to View Pricing, Inventory, Delivery & Lifecycle Information:

TE Connectivity:

3-647628-4