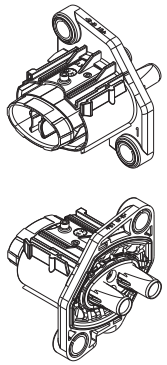

SCALE 1:1

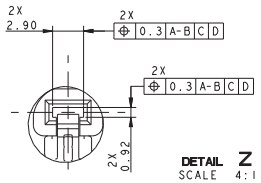

DETAIL Z
SCALE 4:1

DETAIL ALVEOLE 2.8mm
2.8mm DETAIL CAVITY

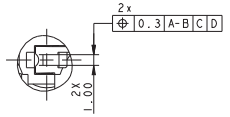

DETAIL Y
SCALE 4:1

DETAIL ALVEOLE DCS 1.5
DCS 1.5 DETAIL CAVITY

CODING 1 SHOWN

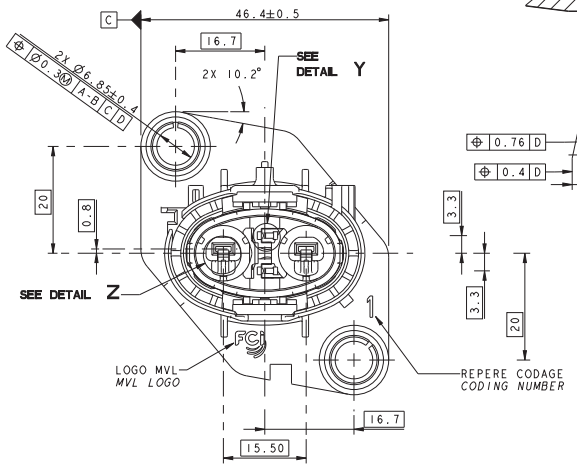

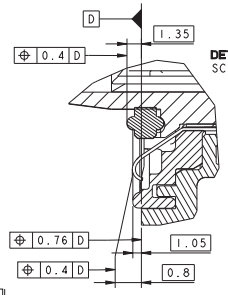

DETAIL X
SCALE 4:1

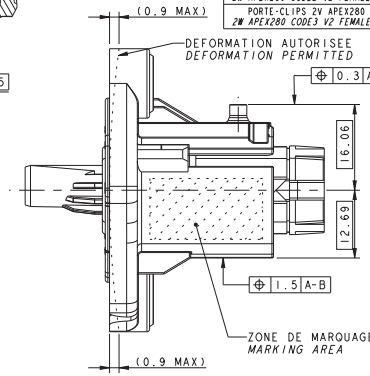

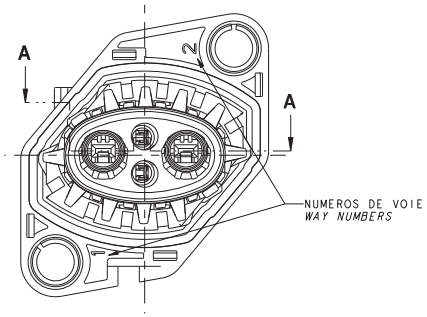

PRODUITS ASSOCIES (POUR INFORMATION) / *ASSOCIATED PARTS (FOR INFORMATION)*

	REFERENCE MVL *MVL PART-N°*	REFERENCE DELPHI *DELPHI PART-N°*	SECTION DU FIL *WIRE SECTION*	DIAMETRE EXTERNE DU FIL *EXTERNAL WIRE DIAMETER*	JUF / *SWS* REFERENCE MVL *MVL PART-N°*	JUF / *SWS* REFERENCE DELPHI *DELPHI PART-N°*	JUF / *SWS* COULEUR *COLOR*
LANGUETTE APEX 2.8 ETAME *TINNED APEX 2.8 MALE TERMINAL*	54001027	15516298	4mm²	Ø3.4 MINI - 3.7 MAXI	C302400	PE246910	ROUGE *REDDISH BROWN*
LANGUETTE DCS2 1.5 DORE *GOLD DCS2 1.5 MALE TERMINAL*	60100714	PE211635	0.35mm²	Ø1.25 MINI - 1.35 MAXI	6 099 39 13	15441379	ROUGE / *RED*
	60100734	10779703	0.5mm²	Ø1.4 MINI - 1.5 MAXI			
			1.0mm²	Ø1.75 MINI - 1.9 MAXI	6 099 39 28	15441380	GRIS / *GREY*
PORTE-CLIPS 2V APEX280 V2 CODE1 *2W APEX280 CODE1 V2 FEMALE CONNECTOR*	F083110						
PORTE-CLIPS 2V APEX280 V2 CODE2 *2W APEX280 CODE2 V2 FEMALE CONNECTOR*	F183110						
PORTE-CLIPS 2V APEX280 V2 CODE3 *2W APEX280 CODE3 V2 FEMALE CONNECTOR*	-						

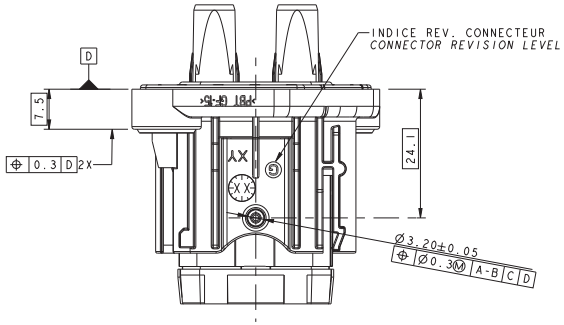

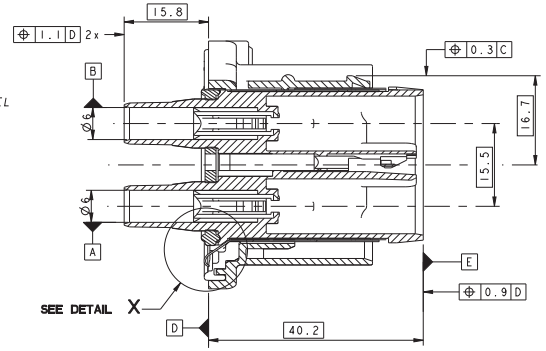

SECTION A-A

NOTAS :

1- CAHIER DES CHARGES MVL : FE PS 10 006
- CLASSE DE TEMPERATURE DU CONNECTEUR : CLASS 3 (-40°C ; +125°C)
- CLASSE DE VIBRATION :
  - PRECONDITIONNEMENT
  - VIBRATION 3x 16H (COMBINE AVEC TEMPERATURE -40°C / +125°C) ; 3.9g
- CLASSE D'ETANCHEITE :
  - 1000mb INITIAL
  - 500mb APRES LES TESTS D'ENVIRONNEMENT.
- EFFORT D'ACCOUPLEMENT : F<60N

2- CONDITIONNEMENT : FE PA 08 007
3- DOSSIER DE MISE EN OEUVRE : PUI39
4- MASSE DU PRODUIT : 0.037 kg ±10%
5- CE PLAN EST UN EXTRAIT DES PLANS DE DEFINITIONS.
ON FERA REFERENCE POUR TOUT LITIGE AUX PLANS DE DEFINITION.
6- PLAN DU PORTE-CLIPS: PCC0726960
7- LE COUPLE DE SERRAGE PRECONISE PARTICIPE A UNE FONCTION SECURITAIRE D'ETANCHEITE.

NOTES:

1-MVL SPECIFICATIONS: FE PS 10 006
- *TEMPERATURE CLASS OF THE CONNECTOR: CLASS 3 (-40°C ; +125°C)*
- *VIBRATION CLASS:*
  - *PRECONDITIONNING*
  - *VIBRATION 3x 16H (COMBINED WITH TEMPERATURE -40°C / +125°C) ; 3.9g*
- *SEALING CLASS:*
  - *1000mb INITIAL*
  - *500mb AFTER TEST ENVIRONNEMENT.*
- *MATING FORCE : F<60N*

2- PACKAGING : FE PA 08 007
3- HANDLING MANUAL : PUI39
4- MASS OF THE PRODUCT : 0.037 kg ±10%
5- THIS DRAWING IS AN EXTRACT OF THE DETAIL DRAWINGS.
IN CASE OF CONFLICT, REFER TO THEM.
6- DRAWING FEMALE CONNECTOR: PCC0726960
7- THE PRECONIZED SCREWING TORQUE PARTICIPATE TO A SECURITARY SEALING FEATURE.

	REFERENCE MVL / *MVL PART-N°*	F873110 REVISION G	F973110 REVISION G	A DEFINIR *TO BE DEFINED*
	REFERENCE DELPHI / *DELPHI PART-N°*	33511766 REVISION 01	33511767 REVISION 01	-
	CODAGE MECANIQUE *MECHANICAL KEY*	CODAGE 1 *KEY 1*	CODAGE 2 *KEY 2*	CODAGE 3 *KEY 3*
	IDENTIFIANT IMDS *IMDS ID*	212989496	212989802	A DEFINIR *TO BE DEFINED*
CODAGE / *KEY*	CODAGE CONNECTEUR SUIVANT VUE DE FACE PLUG CODING *FOLLOWING FRONT VIEW*	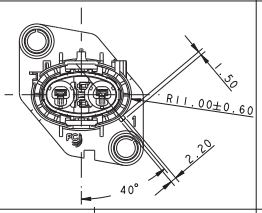	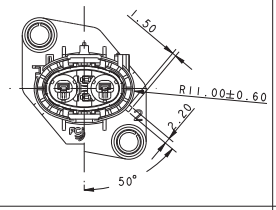	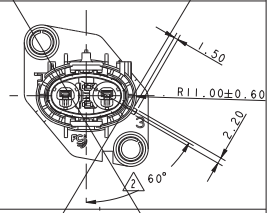
	CODAGE EQUIPEMENT SUIVANT VUE DE FACE DEVICE CODING *FOLLOWING FRONT VIEW*	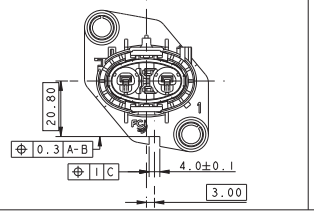	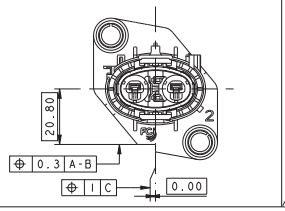	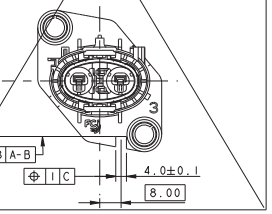

REV	DATE	NOM	CHANGE DESCRIPTION
-	-	-	
	-	-	
	-	-	
	-	-	
	-	-	
	-	-	DELPHI P/N ADDED

ECN-NO. / NUMERO ECN — POSITION / POSITION — CHANGE DESCRIPTION / MODIFICATION

PRODUCT SPEC. / SPECIF. PRODUIT: SEE NOTES — PACKAGING SPEC. / SPECIF. EMBALLAGE: SEE NOTES — APPLICATION SPEC. / SPECIF. APPLICATION: -

COPYRIGHT DELPHI CORPORATION AND/OR ITS AFFILIATES. ALL RIGHTS RESERVED. REVISED
THIS DRAWING IS THE PROPERTY OF DELPHI CORPORATION AND CONTAINS DELPHI CONFIDENTIAL INFORMATION. THE REPRODUCTION, DISTRIBUTION AND UTILIZATION OF THIS DRAWING OR ITS RELATED CAD DATA, AS WELL AS COMMUNICATION OF ANY CONTENT TO OTHERS, WITHOUT EXPRESS AUTHORIZATION, IS PROHIBITED.
CE PLAN EST LA PROPRIETE DE DELPHI CORPORATION ET CONTIENT DES INFORMATIONS DELPHI CONFIDENTIELLES. LA REPRODUCTION, LA DISTRIBUTION ET L'UTILISATION DE CE DOCUMENT OU DE SES DONNEES MNEMONIQUES CAD, AINSI QUE LA COMMUNICATION DE TOUT CONTENU A AUTRUI, SANS AUTORISATION EXPRESSE, EST INTERDITE.

TOLERANCES / TOLERANCES: ±0.2 ±2° — MATERIAL / MATIERE: SEE BOM — SURFACE FINISH / ETAT DE SURFACE: -

CONFORMITY N° / CONFORMITE N°: SEE NOTES — COLOUR / COULEUR: SEE BOM — TOOL NO. / OUTIL N°: - — TCD Lvl. Code / CODE D.E.: FE

DO NOT MEASURE DRAWING / NE PAS PRENDRE DE COTES

DELPHI — DELPHI PACKARD ELECTRICAL/ELECTRONIC ARCHITECTURE, ZYLINDA, FRANCE

ISO PROJECTION / PROJECTION ISO — DIMENSIONS IN MILLIMETERS / DIMENSIONS EN MILLIMETRES — CAD SYSTEM / CAO — DWG SIZE / FORMAT: A1

	DATE	NAME
CREATED BY / CREE PAR	2012/02/20	Gilles SCHMITT
MODIFIED BY / MODIF. PAR	2012/05/15	F FAURE
CHECKED BY / VERIF. PAR	2012/06/26	B LACOTE
APPROVED BY / APPR. PAR	2012/06/27	Patrick MENARD

TITLE / DESIGNATION: 2W APEX 280 V2 MALE CONNECTOR — PROJECT / PROJET: 2W APEX280 POWER V2 CONNECTOR — ECR NO. / NUMERO ECR: EU-090006 — KAT. NO. / NUMERO CAT.:

DRAWING NUMBER / REF. PLAN: PCC0726959 — REV. / IND.: C — STATE / ETAT: SERIAL RELEASED — PART NUMBER / REF. ARTICLE: See Table — REV. / IND.: - — APPROVAL LEVEL / NIV D'APPROBATION: - — SHEET / FEUILLE: 1 of / sur 2 — SCALE / ECH.: 1:1

FILE NAME / NOM DE FICHIER: PCC0726959 — DOCUMENT UNDER PDS CONTROL / DOCUMENT GERE SOUS P.D.S. — NO MODIFICATION ALLOWED OUTSIDE / PAS DE MODIFICATION EN DEHORS

EUR CD4 112 F29

Mouser Electronics

Authorized Distributor

Click to View Pricing, Inventory, Delivery & Lifecycle Information:

Aptiv:
F973110-B F873110-B F873110 F973110