THIS DRAWING IS UNPUBLISHED. RELEASED FOR PUBLICATION -,- .
© COPYRIGHT - BY TYCO ELECTRONICS CORPORATION. ALL RIGHTS RESERVED.

LOC	DIST
—	—

REVISIONS

P	LTR	DESCRIPTION	DATE	DWN	APVD
	C	REV PER ECO-07-017102	20SEP07	PY	BW

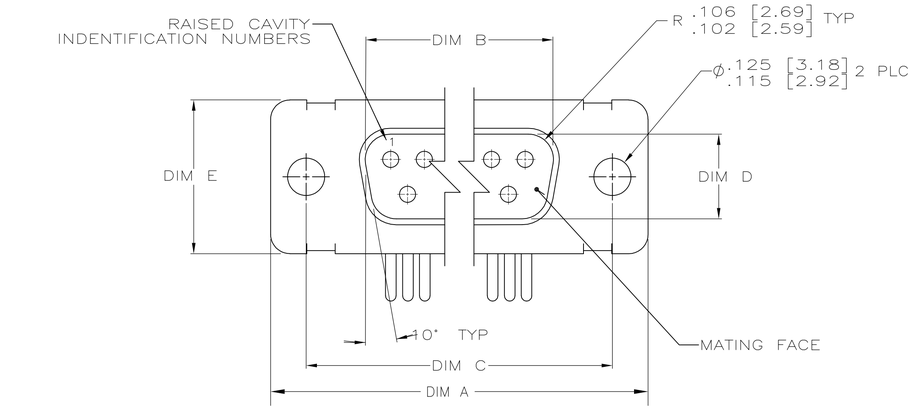

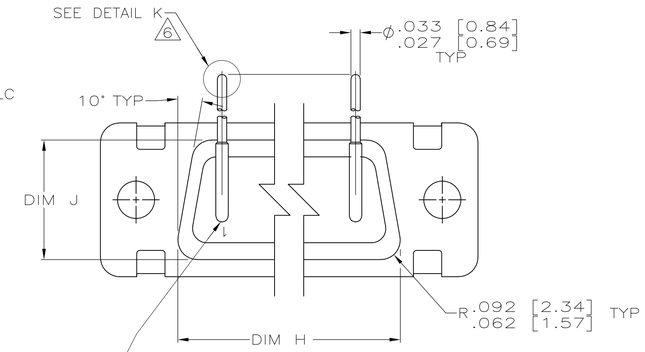

VIEW Z—Z
SHOWN WITH BRACKET
REMOVED FOR CLARITY

CONTACT (QTY = NO. OF POSN)
MATL: BRASS PER ASTM-B-16, OR BERYLLIUM
COPPER PER ASTM-B-194
FINISH: GOLD PER MIL-G-45204, TYPE II,
GRADE C, CLASS I IN CONTACT MATING AREA,
.000010 [0.0003] MIN THK GOLD PER MIL-G-45204
OVER .000050 [0.0013] MIN THK NICKEL
PER QQ-N-290 ON CONTACT BODY

1. SEE SHEET 2 FOR RECOMMENDED P.C. BOARD LAYOUT. TRUE POSITION TOLERANCE FOR P.C.BOARD LAYOUT IS .010 [0.25] AT MAX MATERIAL CONDITION. SUGGESTED BOARD THICKNESS IS .062 [1.57]
2. THE CONNECTORS DESCRIBED IN THIS DOCUMENT MEET THE REQUIREMENTS OF MIL-C-24308 AND MATE WITH ANY RECEPTACLE CONNECTOR WITH SAME INSERT ARRANGEMENT.
3. MARKED WITH .047 [1.19]-.062 [1.57] HIGH CHARACTERS. FAR SIDE REFERS TO THE WIDE SIDE OF THE KEYSTONE. NEAR SIDE REFERS TO THE NARROW SIDE OF THE KEYSTONE. IF THE REAR SHELL IS TOO SMALL FOR THE ENTIRE MILITARY PART NUMBER, MARKING SHALL BE LOCATED AS FOLLOWS:
   A. "M24308" ON FRONT SHELL, FAR SIDE.
   B. SLASH SHEET AND DASH NUMBER ON REAR SHELL, FAR SIDE.
   C. "AMP" AND DATE CODE ON FRONT SHELL, NEAR SIDE.
   D. AMP PART NUMBER ON REAR SHELL, NEAR SIDE.

   IF THE FRONT SHELL IS TOO SMALL FOR "AMP", AMP PART NUMBER AND DATE CODE, MARKING SHALL BE SPLIT AS FOLLOWS:
   A. AMP PART NUMBER ON REAR SHELL, NEAR SIDE.
   B. "AMP" AND DATE CODE ON FRONT SHELL, NEAR SIDE.
   C. MILITARY PART NUMBER ON REAR SHELL, FAR SIDE.
4. REQUIREMENT FOR FULL PIN DIAMETER EXTENSION:
   .159 [4.04] MIN, SHELL SIZES 1 AND 2.
   .150 [3.81] MIN, SHELL SIZES 3 AND 4.
5. THIS DRAWING SHALL BE INTERPRETED IN ACCORDANCE WITH APPLICABLE STANDARDS LISTED IN MIL-STD-100.
6. SOLDER DIPPED PER MIL-STD-2000 COMPOSITION Sn63 CONFORMING TO QQ-S-571 IN THE ENTIRE AREA OF DIMENSION SHOWN. 1218441-6 THRU -10 ONLY.

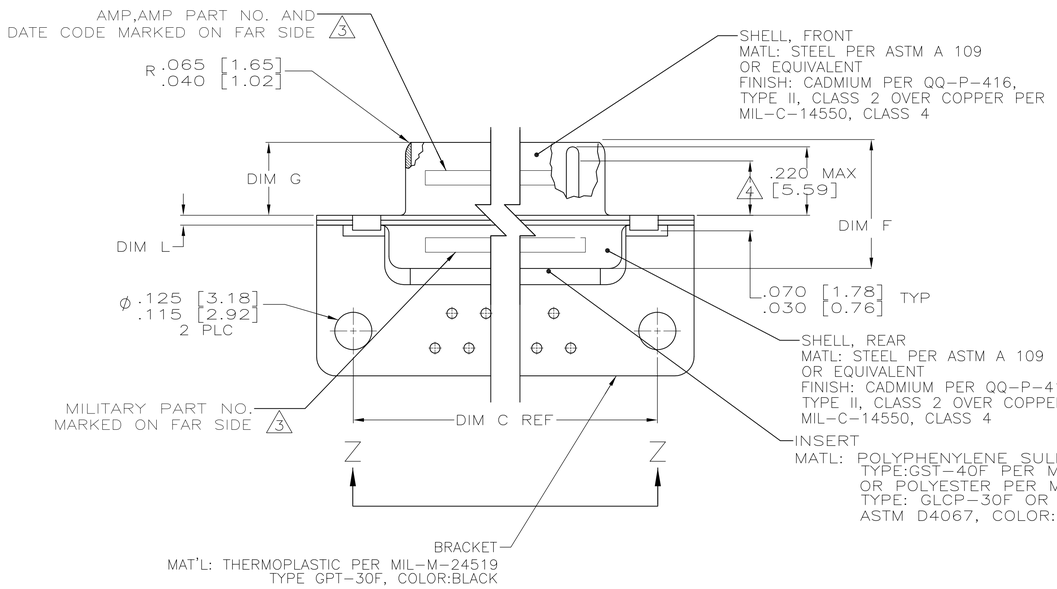

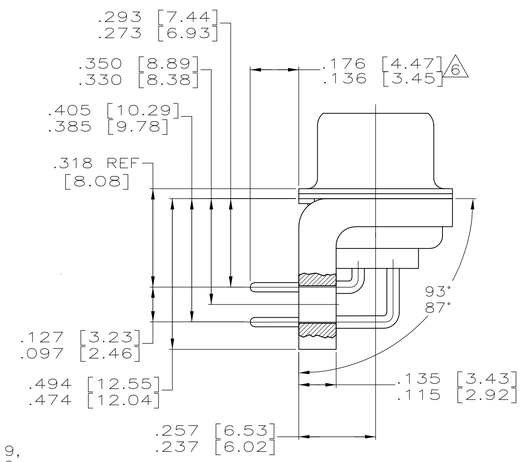

SHELL SIZES 1 THRU 4 CONTACT CONFIGURATION

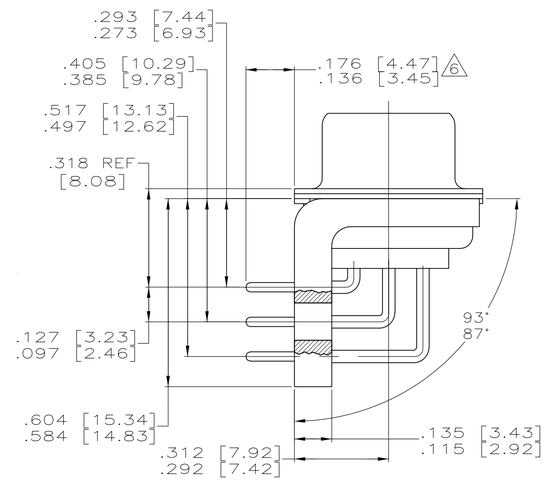

SHELL SIZE 5 CONTACT CONFIGURATION

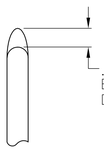

.030 [0.76] MAX
EXTENSION PERMISSIBLE
DUE TO SOLDER DIP

6
DETAIL K
SCALE 8:1
FOR 1218441-6 THRU -10 ONLY

DIM L	DIM J	DIM H	DIM G	DIM F	DIM E	DIM D	DIM C	DIM B	DIM A	INSERT ARRANGEMENT	NO OF POS	SHELL SIZE	MILITARY P/N ON CONNECTOR 3	AMP P/N MARKED ON CONNECTOR 3	AMP PART NO.
.049 [1.24] .029 [0.74]	.544 [13.82] .524 [13.31]	2.188 [55.58] 2.168 [55.07]	.236 [5.99] .224 [5.69]	.436 [11.07] .416 [10.57]	.620 [15.75] .590 [14.99]	.446 [11.33] .436 [11.07]	2.411 [61.24] 2.401 [60.99]	2.084 [52.55] 2.074 [52.30]	2.650 [67.31] 2.620 [66.55]	MS18277-1	50	5	M24308/24-35F	1218441-5	1-1218441-0 6
.049 [1.24] .029 [0.74]	.432 [10.97] .412 [10.46]	2.282 [57.96] 2.262 [57.45]	.236 [5.99] .224 [5.69]	.436 [11.07] .416 [10.57]	.509 [12.93] .479 [12.17]	.334 [8.48] .324 [8.23]	2.505 [63.63] 2.495 [63.37]	2.187 [54.97] 2.177 [54.71]	2.744 [69.70] 2.714 [68.94]	MS18276-1	37	4	M24308/24-34F	1218441-4	1218441-9 6
.049 [1.24] .029 [0.74]	.432 [10.97] .412 [10.46]	1.635 [41.53] 1.615 [41.02]	.236 [5.99] .224 [5.69]	.436 [11.07] .416 [10.57]	.509 [12.93] .479 [12.17]	.334 [8.48] .324 [8.23]	1.857 [47.17] 1.847 [46.91]	1.539 [38.51] 1.529 [38.25]	2.103 [53.42] 2.073 [52.65]	MS18275-1	25	3	M24308/24-33F	1218441-3	1218441-8 6
.040 [1.02] .020 [0.51]	.432 [10.97] .412 [10.46]	1.093 [27.76] 1.073 [27.25]	.238 [6.05] .229 [5.82]	.432 [10.97] .412 [10.46]	.509 [12.93] .479 [12.17]	.334 [8.48] .324 [8.23]	1.317 [33.45] 1.307 [33.20]	.999 [24.79] .989 [24.54]	1.556 [39.52] 1.526 [38.76]	MS18274-1	15	2	M24308/24-32F	1218441-2	1218441-7 6
.040 [1.02] .020 [0.51]	.432 [10.97] .412 [10.46]	.769 [19.53] .749 [19.02]	.238 [6.05] .229 [5.82]	.432 [10.97] .412 [10.46]	.509 [12.93] .479 [12.17]	.334 [8.48] .324 [8.23]	.989 [25.12] .979 [24.87]	.671 [16.46] .661 [16.21]	1.228 [31.19] 1.198 [30.43]	MS18273-1	9	1	M24308/24-31F	1218441-1	1218441-6 6
.049 [1.24] .029 [0.74]	.544 [13.82] .524 [13.31]	2.188 [55.58] 2.168 [55.07]	.236 [5.99] .224 [5.69]	.436 [11.07] .416 [10.57]	.620 [15.75] .590 [14.99]	.446 [11.33] .436 [11.07]	2.411 [61.24] 2.401 [60.99]	2.084 [52.55] 2.074 [52.30]	2.650 [67.31] 2.620 [66.55]	MS18277-1	50	5	M24308/24-35F	1218441-5	1218441-5
.049 [1.24] .029 [0.74]	.432 [10.97] .412 [10.46]	2.282 [57.96] 2.262 [57.45]	.236 [5.99] .224 [5.69]	.436 [11.07] .416 [10.57]	.509 [12.93] .479 [12.17]	.334 [8.48] .324 [8.23]	2.505 [63.63] 2.495 [63.37]	2.187 [54.97] 2.177 [54.71]	2.744 [69.70] 2.714 [68.94]	MS18276-1	37	4	M24308/24-34F	1218441-4	1218441-4
.049 [1.24] .029 [0.74]	.432 [10.97] .412 [10.46]	1.635 [41.53] 1.615 [41.02]	.236 [5.99] .224 [5.69]	.436 [11.07] .416 [10.57]	.509 [12.93] .479 [12.17]	.334 [8.48] .324 [8.23]	1.857 [47.17] 1.847 [46.91]	1.539 [38.51] 1.529 [38.25]	2.103 [53.42] 2.073 [52.65]	MS18275-1	25	3	M24308/24-33F	1218441-3	1218441-3
.040 [1.02] .020 [0.51]	.432 [10.97] .412 [10.46]	1.093 [27.76] 1.073 [27.25]	.238 [6.05] .229 [5.82]	.432 [10.97] .412 [10.46]	.509 [12.93] .479 [12.17]	.334 [8.48] .324 [8.23]	1.317 [33.45] 1.307 [33.20]	.999 [24.79] .989 [24.54]	1.556 [39.52] 1.526 [38.76]	MS18274-1	15	2	M24308/24-32F	1218441-2	1218441-2
.040 [1.02] .020 [0.51]	.432 [10.97] .412 [10.46]	.769 [19.53] .749 [19.02]	.238 [6.05] .229 [5.82]	.432 [10.97] .412 [10.46]	.509 [12.93] .479 [12.17]	.334 [8.48] .324 [8.23]	.989 [25.12] .979 [24.87]	.671 [16.46] .661 [16.21]	1.228 [31.19] 1.198 [30.43]	MS18273-1	9	1	M24308/24-31F	1218441-1	1218441-1

THIS DRAWING IS A CONTROLLED DOCUMENT.

DIMENSIONS: INCHES

TOLERANCES UNLESS OTHERWISE SPECIFIED:
0 PLC ± –
1 PLC ± –
2 PLC ± –
3 PLC ± –
4 PLC ± –
ANGLES ± 1°

MATERIAL: SEE CALLOUTS
FINISH: SEE CALLOUTS

DWN C.C.THOMAS 12-6-99
CHK CHAD BAKER 12-15-99
APVD CHAD BAKER 12-15-99
PRODUCT SPEC —
APPLICATION SPEC —
WEIGHT —

Tyco Electronics
Tyco Electronics Corporation
Harrisburg, PA 17105-3608

NAME
PLUG ASSY, AMPLIMITE
RIGHT ANGLE, SERIES 109
SIZES 1 THRU 5

SIZE	CAGE CODE	DRAWING NO	RESTRICTED TO
A1	00779	C-1218441	—

CUSTOMER DRAWING | SCALE 4:1 | SHEET 1 OF 2 | REV C

THIS DRAWING IS UNPUBLISHED. RELEASED FOR PUBLICATION -,- .
© COPYRIGHT - BY TYCO ELECTRONICS CORPORATION. ALL RIGHTS RESERVED.

LOC	DIST
DF	DO

REVISIONS

P	LTR	DESCRIPTION	DATE	DWN	APVD
	—	SEE SHEET 1	—	—	—

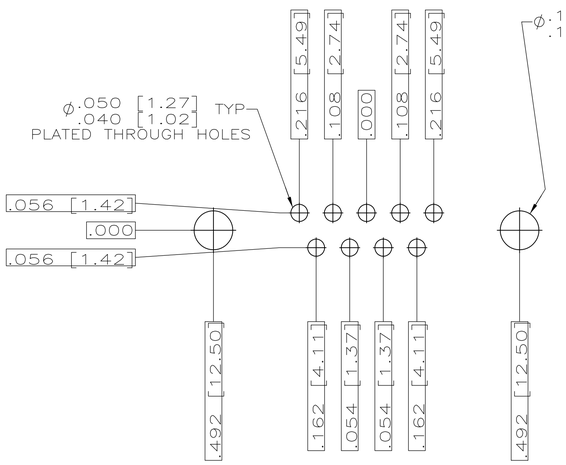

RECOMMENDED P.C. BOARD LAYOUT
SHELL SIZE 1 (9 POSITION) 1

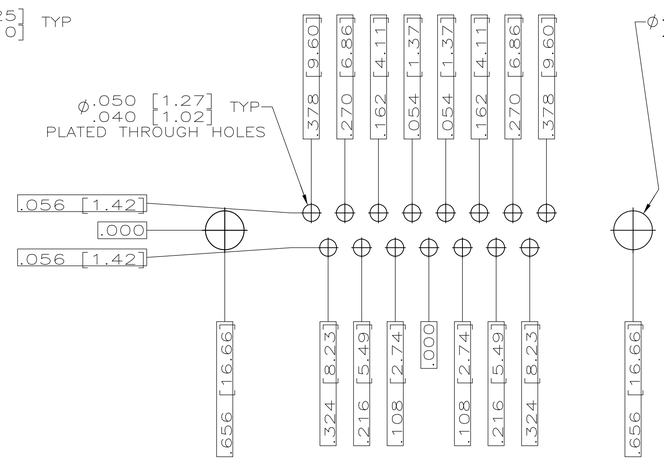

RECOMMENDED P.C. BOARD LAYOUT
SHELL SIZE 2 (15 POSITION) 1

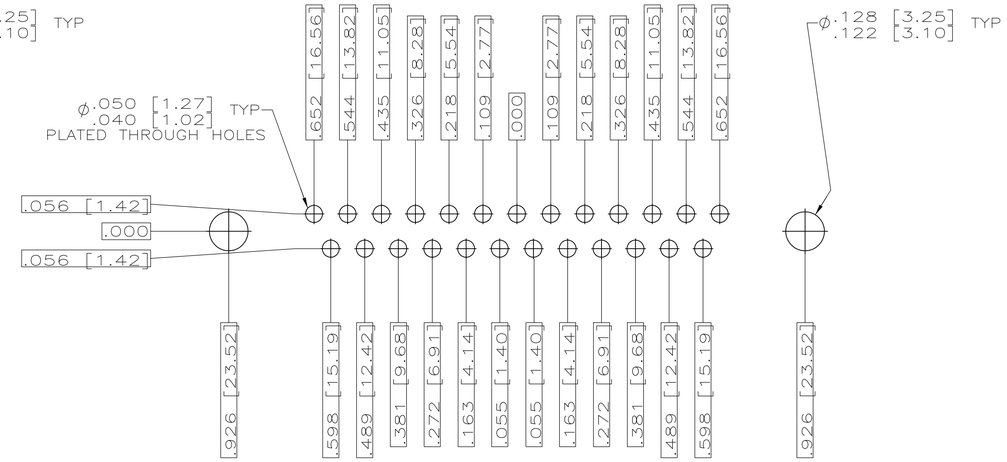

RECOMMENDED P.C. BOARD LAYOUT
SHELL SIZE 3 (25 POSITION) 1

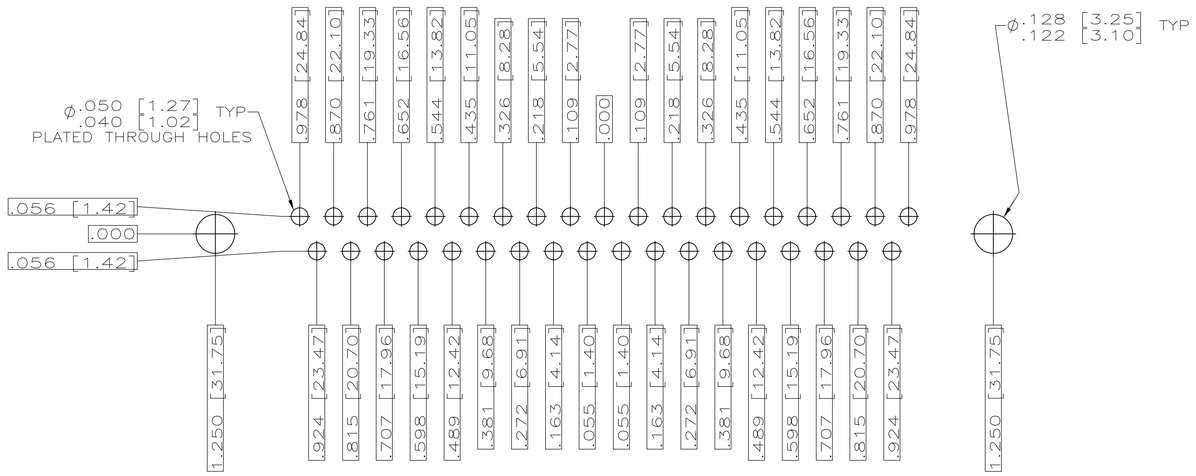

RECOMMENDED P.C. BOARD LAYOUT
SHELL SIZE 4 (37 POSITION) 1

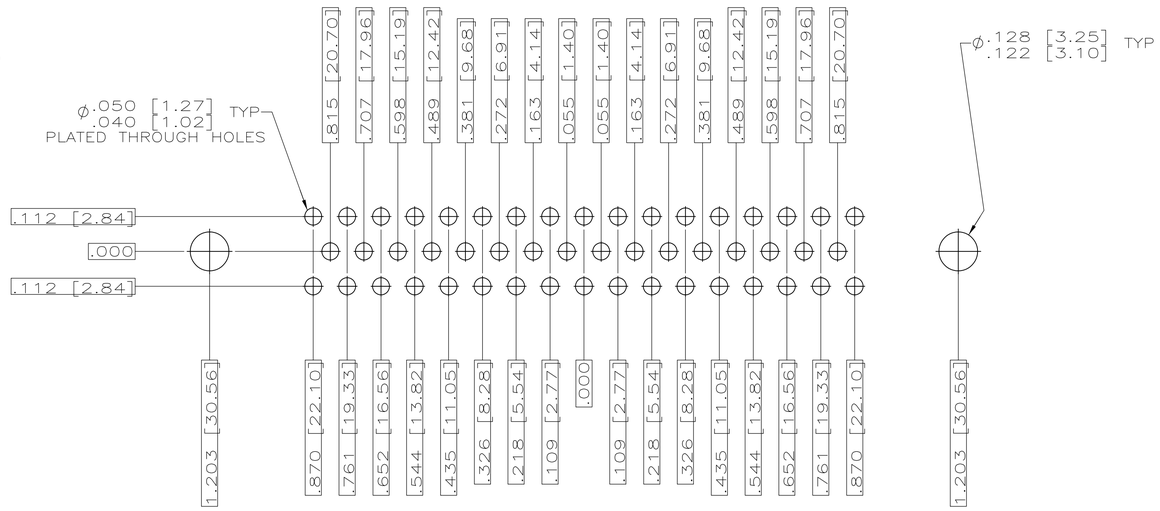

RECOMMENDED P.C. BOARD LAYOUT
SHELL SIZE 5 (50 POSITION) 1

THIS DRAWING IS A CONTROLLED DOCUMENT.

DIMENSIONS: INCHES

TOLERANCES UNLESS OTHERWISE SPECIFIED:
0 PLC ± –
1 PLC ± –
2 PLC ± –
3 PLC ± –
4 PLC ± –
ANGLES ± 4°

MATERIAL: SEE CALLOUTS
FINISH: SEE CALLOUTS

DWN C.C.THOMAS 12-6-99
CHK CHAD BAKER 12-15-99
APVD CHAD BAKER 12-15-99
PRODUCT SPEC —
APPLICATION SPEC —
WEIGHT —

Tyco Electronics
Tyco Electronics Corporation
Harrisburg, PA 17105-3608

NAME: PLUG ASSY,AMPLIMITE RIGHT ANGLE,SERIES 109,SIZE 1 THRU 5

SIZE	CAGE CODE	DRAWING NO	RESTRICTED TO
A1	00779	C-1218441	—

CUSTOMER DRAWING | SCALE 4:1 | SHEET 2 OF 2 | REV C

Mouser Electronics

Authorized Distributor

Click to View Pricing, Inventory, Delivery & Lifecycle Information:

TE Connectivity:

1218441-4