Jan.1.2021 Copyright 2021 HIROSE ELECTRIC CO., LTD. All Rights Reserved.
In case of consideration for using Automotive equipment / device which demand high reliability, kindly contact our sales window correspondents.

	COUNT	DESCRIPTION OF REVISIONS	BY	CHKD	DATE		COUNT	DESCRIPTION OF REVISIONS	BY	CHKD	DATE
△					. .	△					. .
△					. .	△					. .
△					. .	△					. .

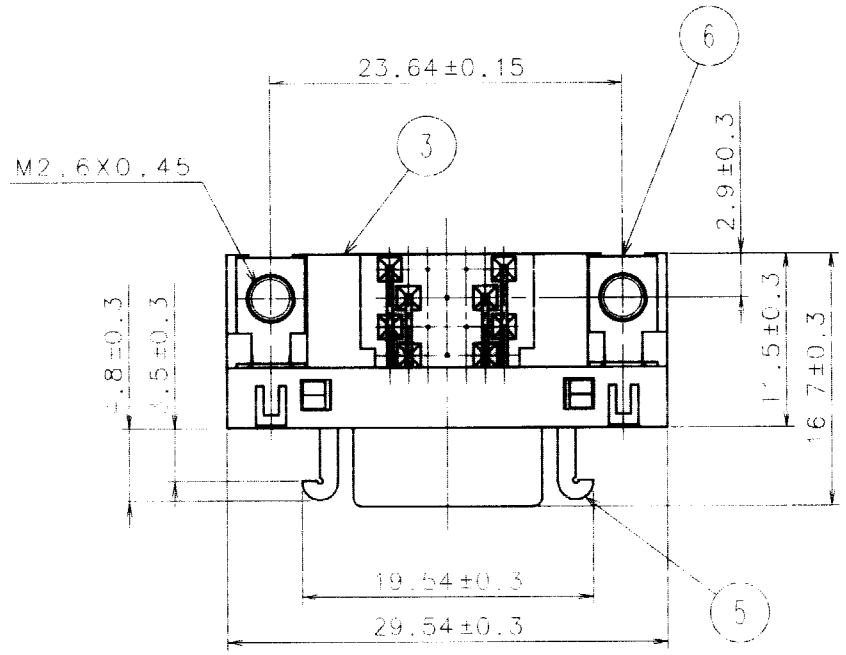

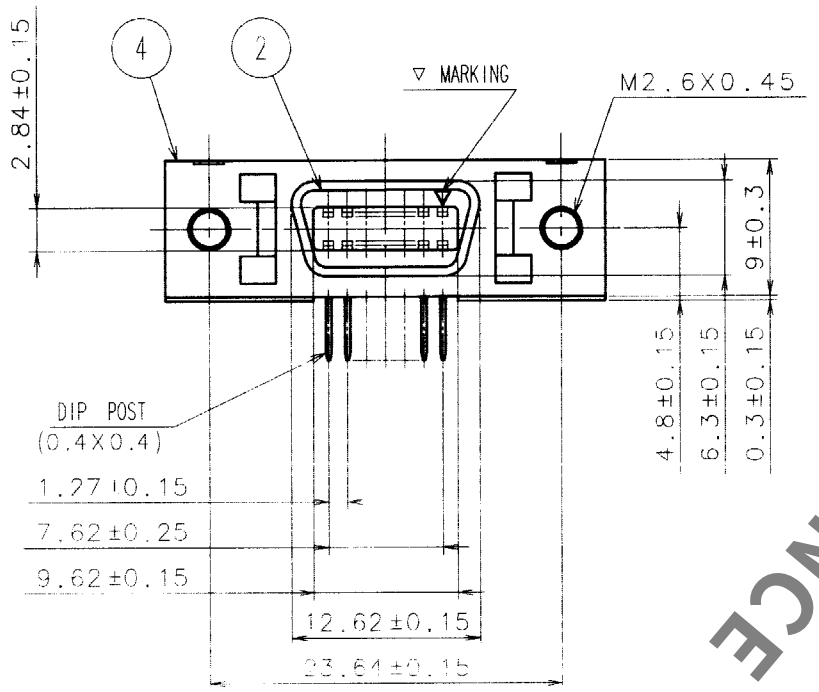

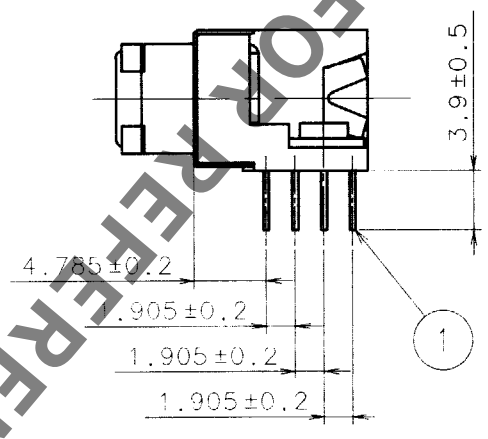

RECOMMENDED PC BOARD PATTERN

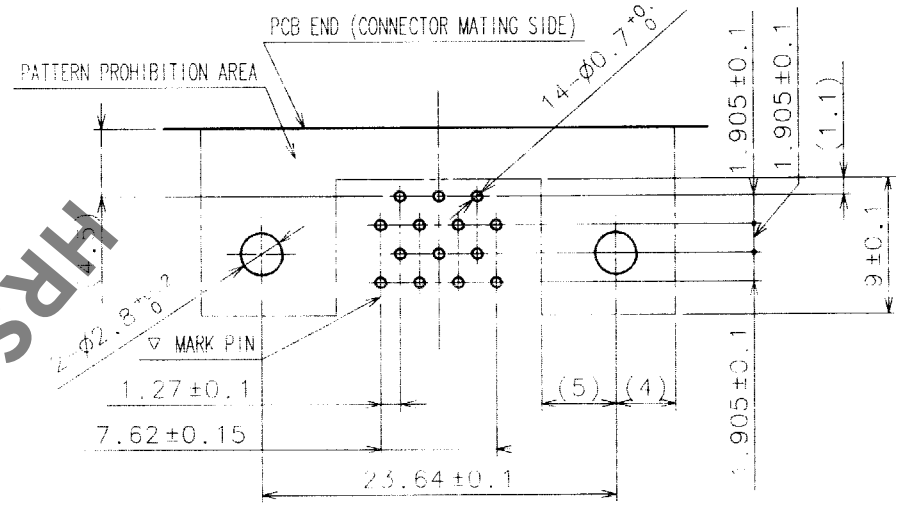

PANEL CUTOUT

(PANEL THICKNESS TO BE 1.6 mm MAX)

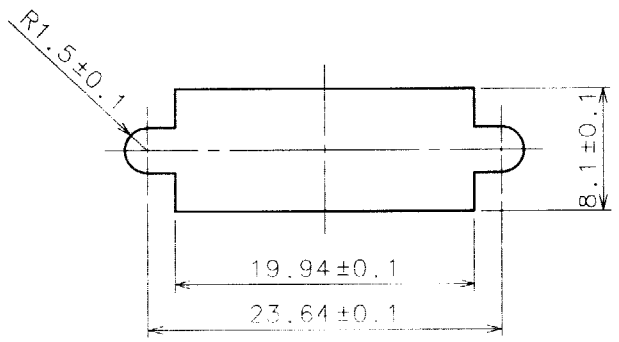

HRS DRAWING FOR REFERENCE

NO.	MATERIAL	FINISH, REMARKS	NO.	MATERIAL	FINISH, REMARKS
3	PBT	(BLACK) UL94V-0	6	STEEL	NICKEL PLATING
2	PBT	(BLACK) UL94V-0	5	STEEL	NICKEL PLATING
1	PHOSPHOR BRONZE	SELECTIVE GOLD FLASH PLATING	4	STEEL	NICKEL PLATING

CODE NO.(OLD)	DRAWN	DESIGNED	CHECKED	APPROVED	RELEASED
CL	[illegible] 03.10.15	[illegible] 03.10.15	J. Enami 03.10.15	H. Miwa 03.10.15	. .

SCALE 2 : 1	DRAWING NO. EDC3-120443-01	PART NO. DX10G1M-14S(50)
UNITS mm	HRS HIROSE ELECTRIC CO., LTD	CODE NO. CL230-5223-0-50 1/1

FORM NO.229

TO
Q