THIS DRAWING IS UNPUBLISHED. RELEASED FOR PUBLICATION -,- .
© COPYRIGHT - By - ALL RIGHTS RESERVED.

LOC	DIST
GP	00

REVISIONS

P	LTR	DESCRIPTION	DATE	DWN	APVD
	T1	REVISED PER ECO-11-004835	11MAR11	RK	HMR

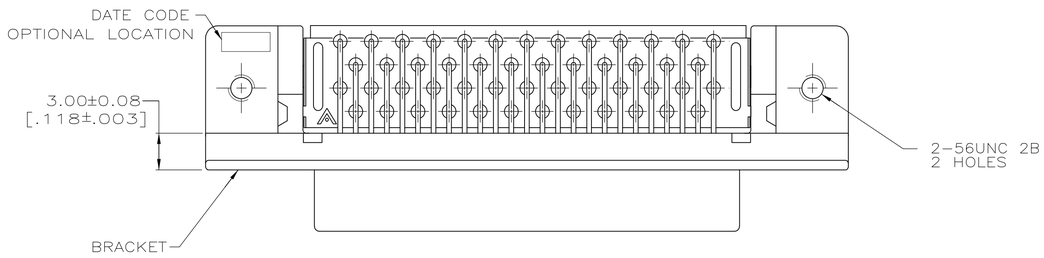

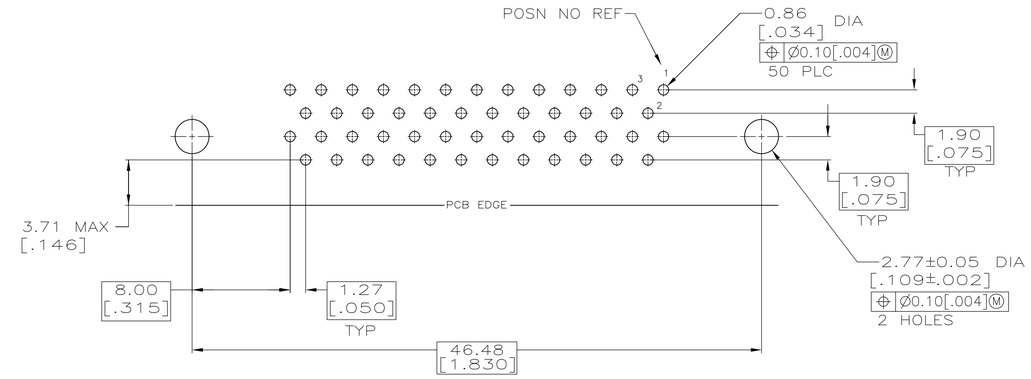

P.C.BOARD MOUNTING DIMENSIONS
CONNECTOR SIDE
P.C.BOARD THICKNESS 1.57±0.20 [.062±.008]
PC BOARD PATTERN S

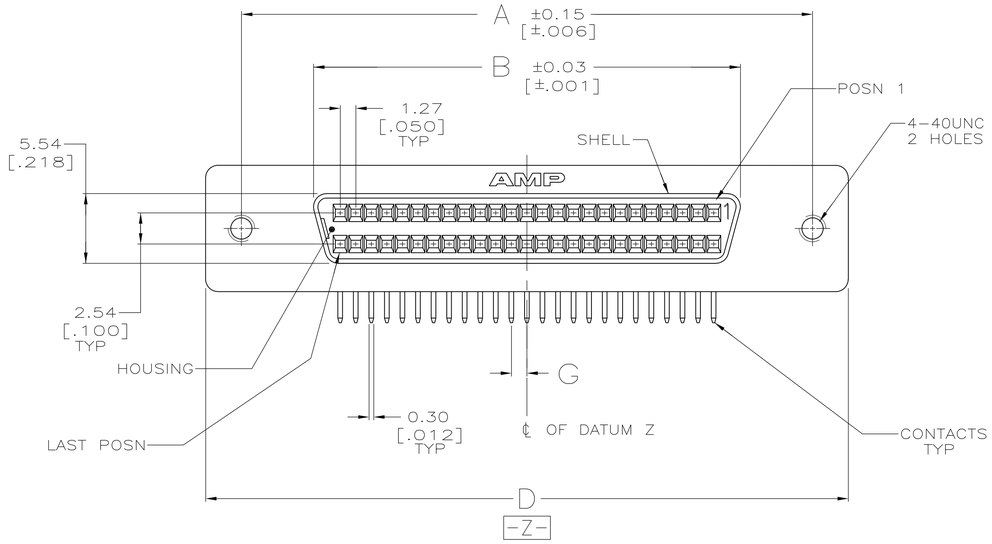

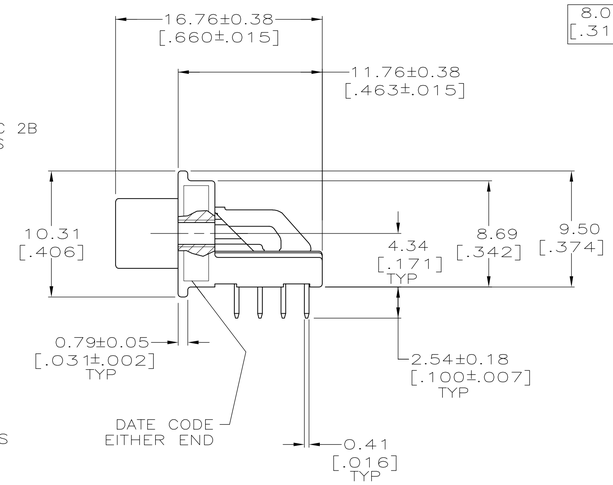

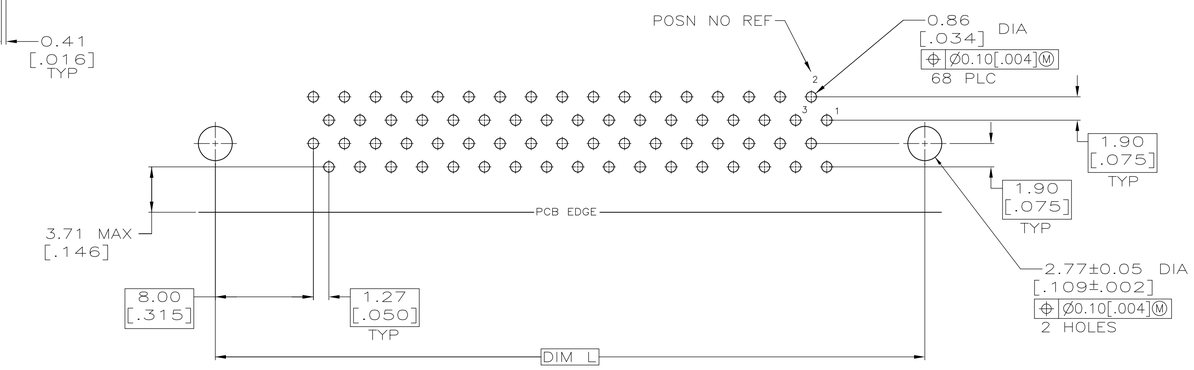

P.C.BOARD MOUNTING DIMENSIONS
CONNECTOR SIDE
P.C.BOARD THICKNESS 1.57±0.20 [.062±.008]
PC BOARD PATTERN T

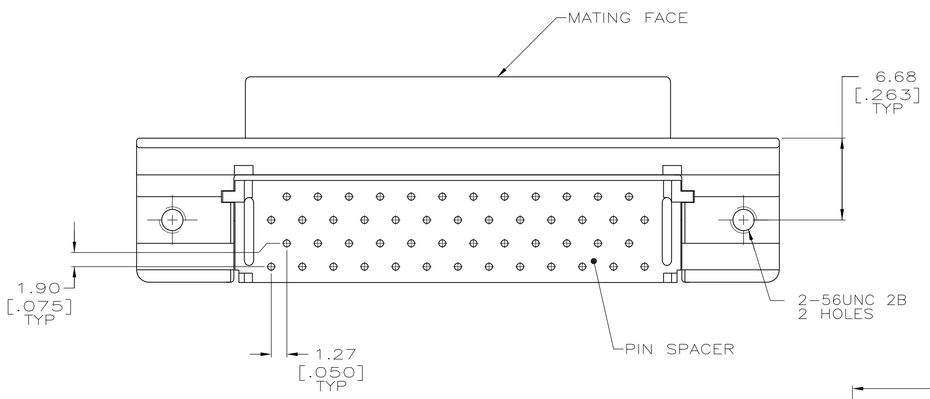

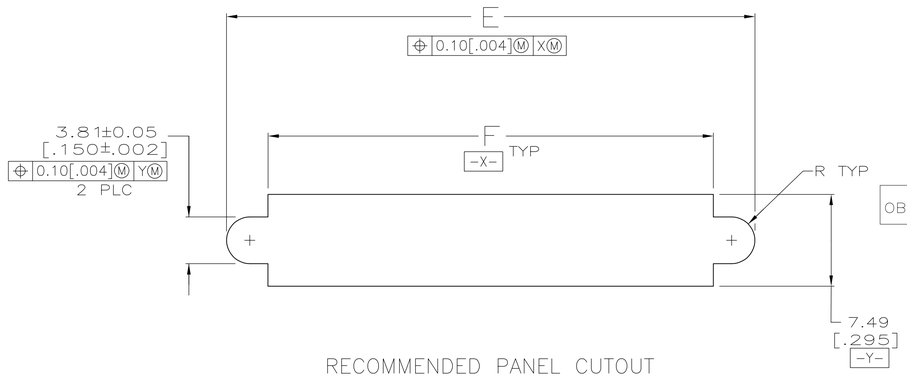

RECOMMENDED PANEL CUTOUT

1. MATERIAL
   CONTACTS: PHOSPHOR BRONZE
   HOUSING & PIN SPACER: UL 94V-O RATED, THERMOPLASTIC, BLACK
   BRACKET: ZINC
   SHELL: CARBON STEEL.

2. FINISH
   CONTACTS: EITHER 0.76μm [.000030] MIN GOLD PLATE FOR A LENGTH OF 0.64 [.025] MAX, 0.13 [.005] MIN FROM MATING END OR GOLD FLASH OVER PALLADIUM NICKEL PLATE, 0.76μm [.000030] MIN TOTAL FOR A LENGTH OF 0.64 [.025] MAX, 0.13 [.005] MIN FROM MATING END. 3.81μm [.000150] MIN TIN-LEAD ON OPPOSITE END FOR A OF 2.72 [.107] MIN, ALL OVER 1.27μm [.000050] MIN NICKEL UNDERPLATE.
   SHELL: 5.08μm [.000200] MIN NICKEL OVER 1.27μm [.000050] MIN COPPER.
   BRACKET: 2.54μm [.000100] MIN NICKEL OVER 5.08μm [.000200] COPPER.

	PC BOARD PATTERN	L	G	F	E	D	B	A	NO OF POSN	PART NUMBER
	T	78.23 [3.080]	0.64 [.025]	69.44 [2.734]	82.04 [3.230]	84.20 [3.315]	66.45 [2.616]	78.23 [3.080]	100	787169-9
	T	57.91 [2.280]	0.64 [.025]	49.12 [1.934]	61.72 [2.430]	63.88 [2.515]	46.13 [1.816]	57.91 [2.280]	68	787169-7
OBSOLETE	S	- -	1.27 [.050]	37.69 [1.484]	50.29 [1.980]	52.45 [2.065]	34.70 [1.366]	46.48 [1.830]	50	787169-5

THIS DRAWING IS A CONTROLLED DOCUMENT.

DIMENSIONS: mm [INCHES]

TOLERANCES UNLESS OTHERWISE SPECIFIED:
0 PLC ± -
1 PLC ± -
2 PLC ± 0.13 [.005]
3 PLC ± -
4 PLC ± -
ANGLES ± -

MATERIAL 1
FINISH 2

DWN C.OBERMAN 4-8-94
CHK R.STONE 4-26-94
APVD -
PRODUCT SPEC 108-1228
APPLICATION SPEC 114-40029
WEIGHT -

TE Connectivity

NAME RECEPTACLE ASSEMBLY, SHIELDED, RIGHT ANGLE, .050 SERIES, AMPLIMITE

SIZE	CAGE CODE	DRAWING NO	RESTRICTED TO
A1	00779	C-787169	-

CUSTOMER DRAWING | SCALE 4:1 | SHEET 1 OF 1 | REV T1

4805 (3/11)

Mouser Electronics

Authorized Distributor

Click to View Pricing, Inventory, Delivery & Lifecycle Information:

TE Connectivity:
787169-7