THIS DRAWING IS UNPUBLISHED. RELEASED FOR PUBLICATION 20
© COPYRIGHT 20 BY TYCO ELECTRONICS CORPORATION. ALL RIGHTS RESERVED.

| LOC | DIST |
|---|---|
| FX | 00 |

REVISIONS

| P | LTR | DESCRIPTION | DATE | DWN | APVD |
|---|---|---|---|---|---|
| | S10 | REVISED PER ECO-09-009758 | 23APR2009 | DLD | DCM |
| | S11 | REVISED PER ECO-09-028550 | 29DEC2009 | DLD | DCM |

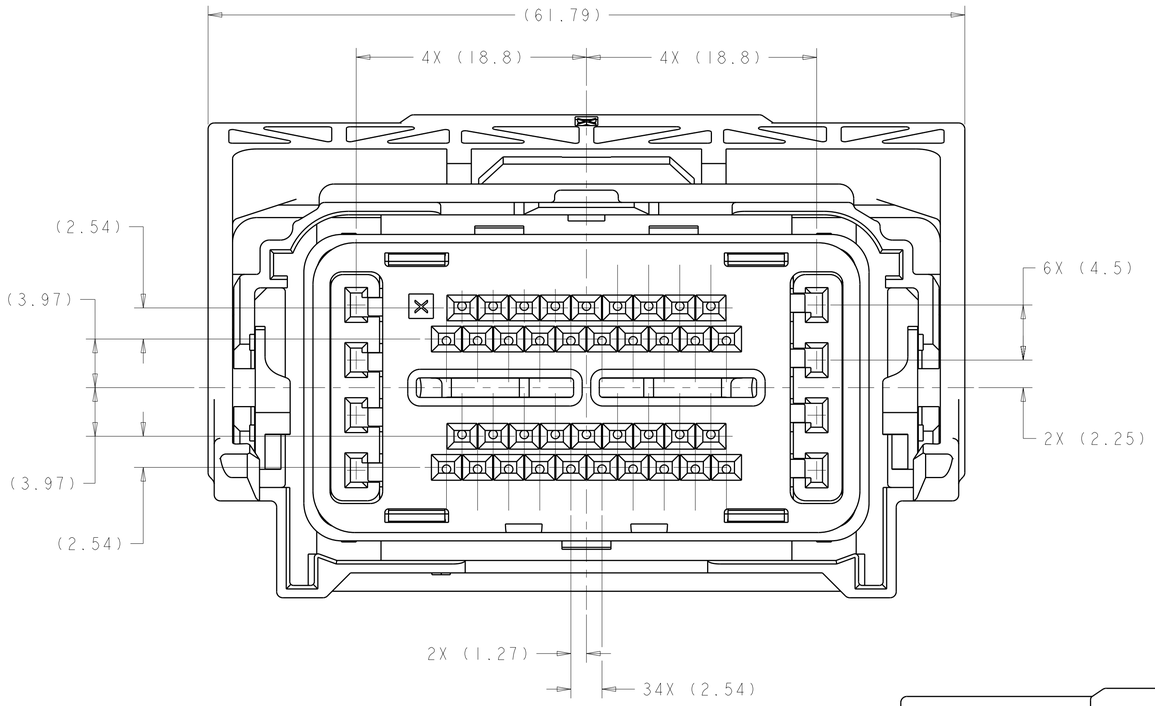


KEYING OPTION "A"
1438082-1 △3

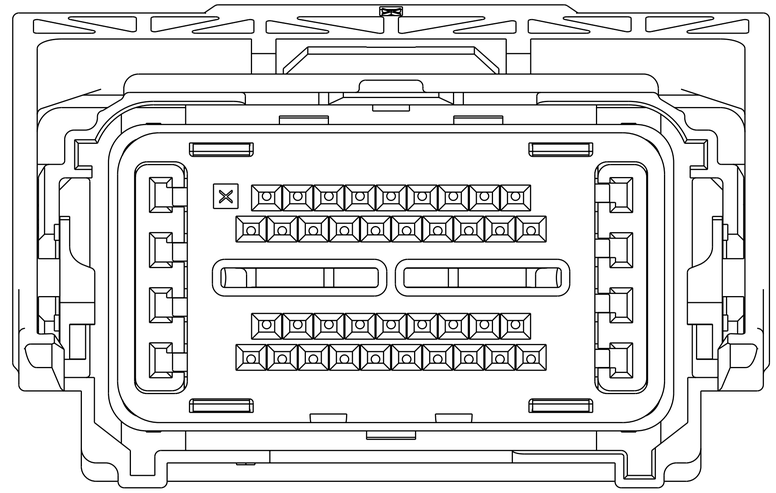

KEYING OPTION "B"
1438082-2 △3

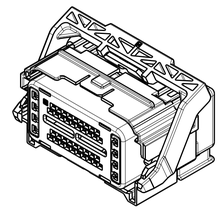

SCALE 1:1

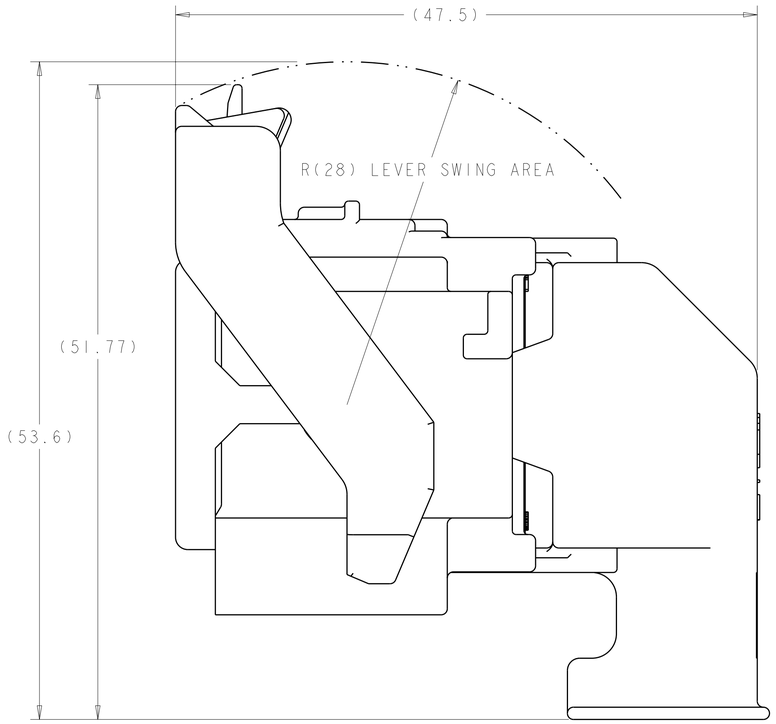


SHOWN WITH CAM LEVER AND SPACER
IN LOADED POSITION WITH
OPTIONAL WIRESHIELD

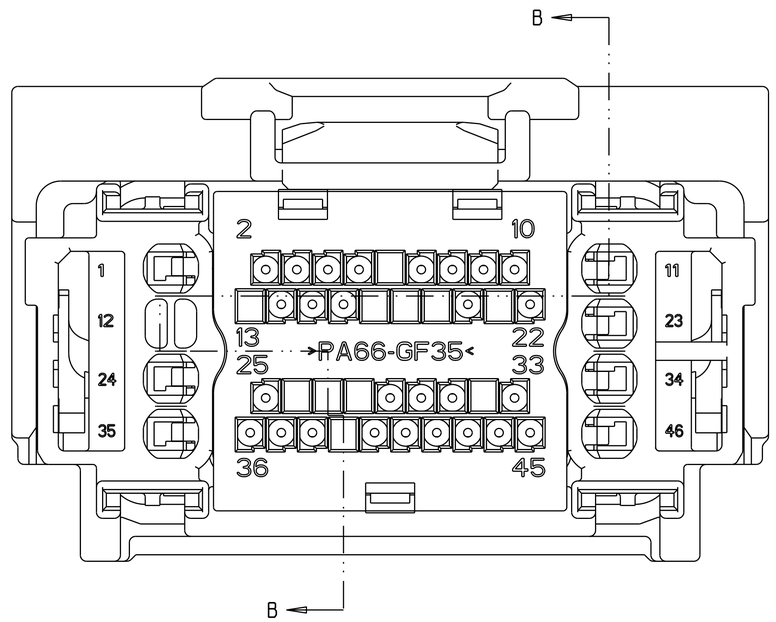


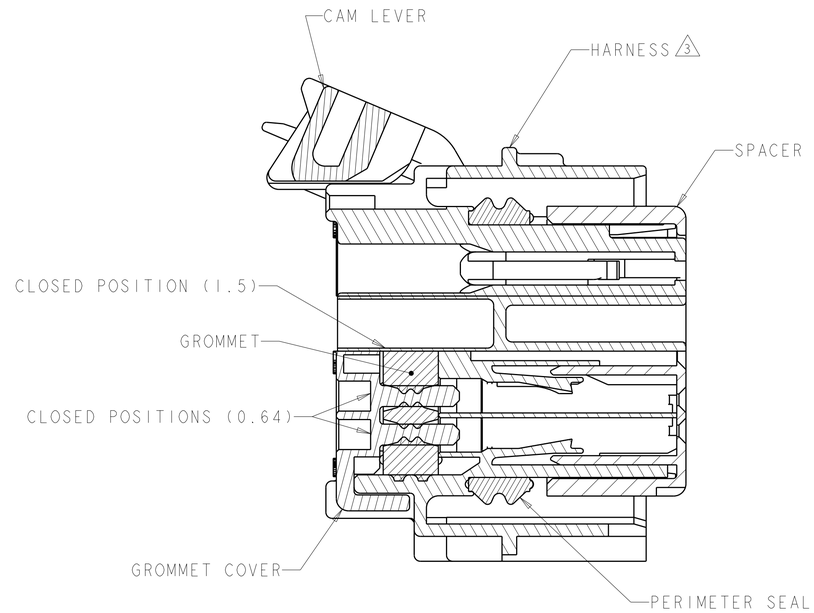


SECTION B-B

△1 MATERIAL:
HARNESS - 35% GLASS FILLED PA66, BLACK
ALT MAT'L: HARNESS - 30% GLASS FILLED sPS, BLACK
SPACER - 40% GLASS FILLED PPS+PA66, RED
ALT MAT'L: 30% GLASS FILLED sPS, RED
ALT MAT'L: 35% GLASS FILLED PA66, RED
COVER - 35% GLASS FILLED PA66, BLACK
ALT MAT'L: COVER - 30% GLASS FILLED LCP, BLACK
CAM LEVER - 35% GLASS FILLED NYLON, GRAY
GROMMET - SILICONE, BROWN
PERIMETER SEAL - SILICONE, GREEN

2. CAM LEVER AND SPACER ARE SHIPPED IN PRE-LATCH POSITION.

△3 SEE PINOUT CHART ON SHEETS 2, 3 AND 4 FOR CLOSED CIRCUIT CONFIGURATIONS.

△4 CAVITIES WITH A NUMERIC SYMBOL INDICATES CLOSED TERMINAL LOCATIONS.
BLANK CAVITIES INDICATE OPEN TERMINAL HOLE LOCATIONS.

△3 SEE PINOUT CHARTS

PART NUMBER

THIS DRAWING IS A CONTROLLED DOCUMENT FOR TYCO ELECTRONICS CORPORATION. IT IS SUBJECT TO CHANGE AND THE CONTROLLING ENGINEERING ORGANIZATION SHOULD BE CONTACTED FOR THE LATEST REVISION.

| | | |
|---|---|---|
| DWN | R VESTAL | 01AUG2003 |
| CHK | D STRAUSSER | 01AUG2003 |
| APVD | D STRAUSSER | 01AUG2003 |

DIMENSIONS: mm

TOLERANCES UNLESS OTHERWISE SPECIFIED:
0 PLC ±-
1 PLC ±0.3
2 PLC ±0.10
3 PLC ±-
4 PLC ±-
ANGLES ±1°

MATERIAL: SEE TABLE
FINISH: SEE TABLE

PRODUCT SPEC: -
APPLICATION SPEC: -
WEIGHT: -

Tyco Electronics
Tyco Electronics
Harrisburg, PA 17105-3608

NAME: 46 WAY PCM CONNECTOR HARNESS ASSEMBLY

| SIZE | CAGE CODE | DRAWING NO | RESTRICTED TO |
|---|---|---|---|
| A1 | 00779 | C-1438082 | - |

CUSTOMER DRAWING | SCALE 4:1 | SHEET 1 OF 5 | REV S11

AMP 4805 REV 31MAR2000

Pro/ENGINEER DRAWING

THIS DRAWING IS UNPUBLISHED. RELEASED FOR PUBLICATION 20
© COPYRIGHT 20 BY TYCO ELECTRONICS CORPORATION. ALL RIGHTS RESERVED.

| LOC | DIST |
|---|---|
| FX | 00 |

REVISIONS

| P | LTR | DESCRIPTION | DATE | DWN | APVD |
|---|---|---|---|---|---|
| | - | SEE SHEET 1 | - | - | - |

| 46 | 45 | 44 | 43 | 42 | 41 | 40 | 39 | 38 | 37 | 36 | 35 | 34 | 33 | 32 | 31 | 30 | 29 | 28 | 27 | 26 | 25 | 24 | 23 | 22 | 21 | 20 | 19 | 18 | 17 | 16 | 15 | 14 | 13 | 12 | 11 | 10 | 9 | 8 | 7 | 6 | 5 | 4 | 3 | 2 | 1 | PART NUMBER | FORD PART NUMBER |
|---|---|---|---|---|---|---|---|---|---|---|---|---|---|---|---|---|---|---|---|---|---|---|---|---|---|---|---|---|---|---|---|---|---|---|---|---|---|---|---|---|---|---|---|---|---|---|---|
| | 45 | | 43 | | | | 39 | | 37 | 36 | 35 | | | | 31 | | | | | | | 24 | | | | | | 18 | 17 | 16 | | 14 | 13 | 12 | | | 9 | | 7 | 6 | | | | 2 | 1 | 9-1438082-7 | 2LIT-14A464-SD-051 |
| | | | | 42 | | | | | | | | | | | | | | | | | | | | | | 20 | | 18 | | | 15 | 14 | | | 11 | 10 | | 8 | 7 | | | 4 | 3 | 2 | 1 | 9-1438082-6 | 2LIT-14A464-SD-050 |
| | | | | 42 | | | | | | | | | | | | | | | | | | | | | | 20 | | 18 | | | | | | | 11 | 10 | | | | | | | | | 1 | 9-1438082-5 | 2LIT-14A464-SD-049 |
| | | | | 42 | | | | | | | | | | | | | | | | | | | | | | 20 | | 18 | | | | | | | 11 | 10 | | | | | | | | 2 | 1 | 9-1438082-4 | 2LIT-14A464-SD-048 |
| | | | | | | | | | | | 35 | | | | | | | | 27 | | | | | | | | | | | | | | | | | | | | | | | | | | | | 9-1438082-3 | 2LIT-14A464-SD-047 |
| | 45 | | 43 | | | | | | | 36 | 35 | | | 32 | 31 | | | | | | | 24 | | | 21 | | 19 | 18 | 17 | 16 | | 14 | | 12 | | | | | 7 | 6 | | | | | 1 | 9-1438082-1 | 2LIT-14A464-SD-046 |
| 46 | | | | | | | | | | | | | | | 31 | | | | | | | | | | | | | | | | | | | | | | | | | | | | | | | | 9-1438082-0 | 2LIT-14A464-SD-045 |
| | | | | | | | | | | | | | | | 31 | | | | | | | 24 | | | | | | | | 16 | | | | | | | 8 | | | | | 3 | 2 | | 8-1438082-9 | 2LIT-14A464-SD-044 |
| | | | | | | | | | | | | | | | | | | | 27 | | | | | | | | | | | | | | | | | | | | | | | | | | | | 8-1438082-8 | 2LIT-14A464-SD-043 |
| | 45 | 44 | 43 | 42 | | 40 | | 38 | 37 | 36 | | | 33 | | 31 | | 29 | | | | | 24 | | 22 | | 20 | | 18 | 17 | 16 | 15 | | | | | | 9 | 8 | | | | 3 | | | 8-1438082-7 | 2LIT-14A464-SD-042 |
| | 45 | 44 | 43 | 42 | | 40 | | 38 | 37 | 36 | | | 33 | | 31 | | 29 | | | | | 24 | | 22 | 21 | 20 | 19 | 18 | 17 | 16 | 15 | | | | | | 9 | 8 | | 6 | | | 2 | | 8-1438082-6 | 2LIT-14A464-SD-041 |
| 46 | | | | | | | | | | | | | | | 31 | | | | | | | | | | | | | | | | | | | | | | 9 | | | 6 | | | 3 | | 8-1438082-5 | 2LIT-14A464-SD-040 |
| | | | 43 | 42 | | | 39 | | 37 | | | | | | | | | | | | | | | | | 20 | 19 | 18 | | | | | | | 11 | 10 | 9 | | | | | | | 2 | 1 | 8-1438082-4 | 2LIT-14A464-SD-039 |
| | | | 43 | | | | | | | | | | | | 31 | | 29 | | | | | | | | | | | 18 | | | | | | | | | | | | | | | | | | 8-1438082-3 | 2LIT-14A464-SD-038 |
| | 45 | 44 | 43 | 42 | | 40 | | 38 | 37 | 36 | | | 33 | | 31 | | 29 | | | | | 24 | | 22 | 21 | 20 | | 18 | 17 | 16 | 15 | | | | | | 9 | 8 | | | | | 2 | | 8-1438082-0 | 2LIT-14A464-SD-037 |
| | 45 | | 43 | | | | | | | 36 | 35 | | | | 31 | | | | | | | 24 | | | | | | | | 16 | | 14 | | 12 | | | | | 7 | 6 | | | | 2 | 1 | 7-1438082-9 | 2LIT-14A464-SD-036 |
| | 45 | | 43 | | | | | | | 36 | 35 | | | | 31 | | | | | | | 24 | | | 21 | | 19 | | | 16 | | 14 | | 12 | | | | | 7 | 6 | | | | 2 | 1 | 7-1438082-8 | 2LIT-14A464-SD-035 |
| | | | 43 | 42 | | | 39 | 38 | 37 | | | | | 32 | | | | 28 | | | | | | | | | 19 | 18 | 17 | 16 | | | | | | 10 | 9 | | | | | | | | | 7-1438082-5 | 2LIT-14A464-SD-034 |
| | 45 | 44 | 43 | 42 | | 40 | | 38 | 37 | 36 | | | 33 | | 31 | | 29 | | | | | 24 | | 22 | 21 | 20 | | 18 | 17 | 16 | 15 | | | | | | 9 | 8 | | 6 | | | 2 | | 7-1438082-4 | 2LIT-14A464-SD-033 |
| | 45 | 44 | 43 | 42 | | 40 | | 38 | 37 | 36 | | | 33 | | 31 | | | | | | | 24 | | 22 | 21 | 20 | | 18 | 17 | 16 | 15 | | | | | | 9 | 8 | | 6 | | | 2 | | 7-1438082-3 | 2LIT-14A464-SD-032 |
| | | | | | | 40 | | | | | | | | | | | 29 | | | | | | | | | | | | | | | | | | | | 9 | | | | | | | | 6-1438082-6 | 2LIT-14A464-SD-031 |
| | | | | | | | | | | | | | | | | | | | 27 | | | | | | | | | | | | | | | 12 | | | | | | | 6 | | | | | 6-1438082-3 | 2LIT-14A464-SD-030 |
| | | | | | | | | | | | | | | | | | | | 27 | | | | | | | | | | | | | | | | | | | | | | 6 | | 4 | | | | 6-1438082-2 | 2LIT-14A464-SD-029 |
| | | | | | | | | | | | | | | | | | | | 27 | | | | | | | | | | | | | | | | | | | | | | 6 | | | | | | 6-1438082-1 | 2LIT-14A464-SD-028 |
| | | | | | | | | | | | | | | | | | 29 | 28 | | | 25 | | | | 21 | | | 18 | | 16 | | | | | | | | | | | 6 | 5 | | | | | 5-1438082-6 | 2LIT-14A464-SD-027 |
| | | | | | | | | | | | | | | | | | 29 | 28 | | | 25 | | | | 21 | | | | | 16 | | | | | | | | | | | 6 | 5 | | | | | 5-1438082-5 | 2LIT-14A464-SD-026 |
| | | | | | | | | | | | | | | | | 30 | 29 | | | | | | | | 21 | | | 18 | | 16 | | | | | | | | | | | | 5 | | | | | 5-1438082-2 | 2LIT-14A464-SD-025 |
| | | | 43 | 42 | | | 39 | | 37 | | | | | | | | | | | | | | | | | 20 | 19 | 18 | 17 | | 15 | 14 | | | 11 | 10 | 9 | 8 | 7 | | | 4 | 3 | 2 | 1 | 5-1438082-0 | 2LIT-14A464-SD-024 |
| | | | | 42 | | | | | | | | | | | | | | | | | | | | | | | | | | | 15 | 14 | | | 11 | 10 | 9 | 8 | 7 | | | 4 | 3 | | 1 | 4-1438082-9 | 2LIT-14A464-SD-023 |
| | | | 43 | 42 | | | 39 | | 37 | | | | | | | | | | | | | | | | | 20 | 19 | 18 | 17 | | | | | | 11 | 10 | 9 | | | | | | | 2 | 1 | 4-1438082-8 | 2LIT-14A464-SD-022 |
| | | | | 42 | | | | | | | | | | | | | | | | | | | | | | | | | | | | | | | 11 | 10 | 9 | | | | | | | | 1 | 4-1438082-7 | 2LIT-14A464-SD-021 |
| | | | 43 | 42 | | | 39 | | 37 | | | | | | | | | | | | | | 23 | | | 20 | 19 | 18 | 17 | | | | | | 11 | 10 | 9 | | | | | | | 2 | | 4-1438082-2 | 2LIT-14A464-SD-020 |
| | 45 | | 43 | | | | | | | 36 | 35 | | | | 31 | | | | | | | 24 | | | | | | 18 | 17 | 16 | | 14 | | 12 | | | | | 7 | 6 | | | | 2 | 1 | 4-1438082-0 | 2LIT-14A464-SD-019 |
| | | | 43 | 42 | | | 39 | | 37 | | | | | | | | | | | | | | 23 | | | 20 | 19 | 18 | 17 | | 15 | 14 | | | 11 | 10 | 9 | 8 | 7 | | | 4 | 3 | 2 | | 3-1438082-8 | 2LIT-14A464-SD-018 |
| | | | | 42 | | | | | | | | | | | | | | | | | | | 23 | | | | | | | | 15 | 14 | | | 11 | 10 | 9 | 8 | 7 | | | 4 | 3 | | | 3-1438082-7 | 2LIT-14A464-SD-017 |
| | | | 43 | 42 | | | 39 | | 37 | | | | | | | | | | | | | | 23 | | | 20 | 19 | 18 | 17 | 16 | | | | | 11 | 10 | 9 | | | | | | | 2 | | 3-1438082-6 | 2LIT-14A464-SD-016 |
| | | | | 42 | | | | | | | | | | | | | | | | | | | 23 | | | | | | | | | | | | 11 | 10 | 9 | | | | | | | | | 3-1438082-5 | 2LIT-14A464-SD-015 |
| | 45 | | 43 | | | | 39 | | 37 | 36 | 35 | | | | 31 | | | | | | | 24 | | | 21 | | 19 | 18 | 17 | 16 | | 14 | 13 | 12 | | | 9 | | 7 | 6 | | | | 2 | 1 | 3-1438082-4 | 2LIT-14A464-SD-014 |
| | 45 | | 43 | | | | 39 | | 37 | 36 | 35 | | 33 | | 31 | | | | | | 25 | 24 | | | 21 | | 19 | 18 | 17 | 16 | | 14 | 13 | 12 | | | 9 | | 7 | 6 | | | | 2 | 1 | 3-1438082-3 | 2LIT-14A464-SD-013 |
| | 45 | | 43 | | | | | | | 36 | 35 | | | | 31 | | | | | | | 24 | | | 21 | | 19 | 18 | 17 | 16 | | 14 | | 12 | | | | | 7 | 6 | | | | 2 | 1 | 3-1438082-2 | 2LIT-14A464-SD-012 |
| | | | | 42 | | | | | | | | | | | | | | | | | | | | | | | | | | | 15 | 14 | 13 | | | 10 | 9 | 8 | 7 | | | 4 | 3 | | | 3-1438082-1 | 2LIT-14A464-SD-011 |
| | | | 43 | 42 | | | 39 | | 37 | | | | | | | | | | | | | | | | | 20 | 19 | 18 | 17 | | | | 13 | | | 10 | 9 | | | | | | | 2 | | 3-1438082-0 | 2LIT-14A464-SD-010 |
| | | | | 42 | | | | | | | | | | | | | | | | | | | | | | | | | | | | | 13 | | | 10 | 9 | | | | | | | | | 2-1438082-9 | 2LIT-14A464-SD-009 |
| | | | 43 | 42 | | | 39 | | 37 | | | | | | | | | | | | | | | | | 20 | 19 | 18 | 17 | | 15 | 14 | 13 | | | 10 | 9 | 8 | 7 | | | 4 | 3 | 2 | | 2-1438082-5 | 2LIT-14A464-SD-008 |
| | 45 | | | | | | 39 | | 37 | 36 | 35 | | 33 | | | | | | | | 25 | 24 | | | 21 | | 19 | 18 | 17 | 16 | | 14 | 13 | 12 | | | 9 | | 7 | 6 | | | | 2 | 1 | 2-1438082-3 | 2LIT-14A464-SD-007 |
| | 45 | | | | | | 39 | | 37 | 36 | 35 | | | | | | | | | | | 24 | | | 21 | | 19 | 18 | 17 | 16 | | 14 | 13 | 12 | | | 9 | | 7 | 6 | | | | 2 | 1 | 2-1438082-2 | 2LIT-14A464-SD-006 |
| | 45 | | | | | | | | | 36 | 35 | | 33 | | | | | | | | 25 | 24 | | | 21 | | 19 | 18 | 17 | 16 | | 14 | | 12 | | | | | 7 | 6 | | | | 2 | 1 | 1-1438082-9 | 2LIT-14A464-SD-005 |
| | 45 | | | | | | | | | 36 | 35 | | | | | | | | | | | 24 | | | 21 | | 19 | 18 | 17 | 16 | | 14 | | 12 | | | | | 7 | 6 | | | | 2 | 1 | 1-1438082-8 | 2LIT-14A464-SD-004 |
| | 45 | | | | | | | | | | 35 | | | | | | | | | | | 24 | | | 21 | | 19 | 18 | 17 | 16 | | 14 | | 12 | | | | | 7 | 6 | | | | 2 | 1 | 1-1438082-1 | 2LIT-14A464-SD-003 |
| | | | | | | | | | | | | | | | | | 29 | 28 | | | | | | | 21 | | | | | 16 | | | | | | | | | | | 5 | | | | | 1438082-6 | 2LIT-14A464-SD-002 |
| | | | | | | | | | | | 35 | | | | | | | | | | | 24 | | | 21 | | 19 | 18 | 17 | | | | | 12 | | | | | | | 6 | | | | | 1 | 1438082-5 | 2LIT-14A464-SD-001 |
| | | | | | | | | | | | | | | | | | | | | | | | | | | | | | | | | | | | | | | | | | | | | | | 1438082-1 | 2LIT-14A464-SD-000 |

TERMINAL HOLE POSITION

PIN-OUT CHART KEYING OPTION "A" 4

THIS DRAWING IS A CONTROLLED DOCUMENT FOR TYCO ELECTRONICS CORPORATION. IT IS SUBJECT TO MANDATORY COMPLIANCE BY ALL WITHIN THIS ORGANIZATION. SHOULD BE CONTACTED FOR THE LATEST REVISION.

DIMENSIONS: mm

TOLERANCES UNLESS OTHERWISE SPECIFIED:
0 PLC ±-
1 PLC ±0.3
2 PLC ±0.10
3 PLC ±-
4 PLC ±-
ANGLES ±1°

MATERIAL - - -
FINISH - - -

DWN R. VESTAL 01AUG2003
CHK D. STRAUSSER 01AUG2003
APVD D. STRAUSSER 01AUG2003
PRODUCT SPEC -
APPLICATION SPEC -
WEIGHT -

Tyco Electronics
Tyco Electronics
Harrisburg, PA 17105-3608

NAME
# 46 WAY PCM CONNECTOR HARNESS ASSEMBLY

| SIZE | CAGE CODE | DRAWING NO | RESTRICTED TO |
|---|---|---|---|
| A1 | 00779 | C-1438082 | - |

CUSTOMER DRAWING | SCALE 4:1 | SHEET 2 OF 5 | REV S11

THIS DRAWING IS UNPUBLISHED. RELEASED FOR PUBLICATION 20
© COPYRIGHT 20 BY TYCO ELECTRONICS CORPORATION. ALL RIGHTS RESERVED.

| LOC | DIST |
|---|---|
| FX | 00 |

REVISIONS

| P | LTR | DESCRIPTION | DATE | DWN | APVD |
|---|---|---|---|---|---|
| | - | SEE SHEET 1 | - | - | - |

| 46 | 45 | 44 | 43 | 42 | 41 | 40 | 39 | 38 | 37 | 36 | 35 | 34 | 33 | 32 | 31 | 30 | 29 | 28 | 27 | 26 | 25 | 24 | 23 | 22 | 21 | 20 | 19 | 18 | 17 | 16 | 15 | 14 | 13 | 12 | 11 | 10 | 9 | 8 | 7 | 6 | 5 | 4 | 3 | 2 | 1 | PART NUMBER | FORD PART NUMBER |
|---|---|---|---|---|---|---|---|---|---|---|---|---|---|---|---|---|---|---|---|---|---|---|---|---|---|---|---|---|---|---|---|---|---|---|---|---|---|---|---|---|---|---|---|---|---|---|---|
| | | 44 | | | | | | | | | 35 | | | 32 | | | | | | | | | | 22 | | | | | | | | | | 12 | | | 9 | | 7 | 6 | | | | | | 1 | 6-1438735-7 | 2LIT-14A464-SD-086 |
| | | 44 | | | | | | | | | 35 | | | 32 | | | | | | | | | | | | | | | | | | | | 12 | | | 9 | | 7 | 6 | | | | | | 1 | 6-1438735-3 | 2LIT-14A464-SD-085 |
| | | | | | | | | | | | 35 | | | | | | | | | | | | | | | | | | | | | | | | | | | | | | | | | | | | 6-1438735-2 | 2LIT-14A464-SD-084 |
| | | | 43 | 42 | | 40 | 39 | | 37 | | | | | | | | 29 | | | | | | | | | 20 | | 18 | | | 15 | 14 | | | 11 | 10 | 9 | 8 | 7 | | | 4 | 3 | | 1 | 6-1438735-1 | 2LIT-14A464-SD-083 |
| | 45 | | 43 | | | | | 38 | | 36 | | | | | 31 | | | | | | 25 | 24 | | | | | | 18 | 17 | 16 | | 14 | | 12 | | | | | 7 | 6 | | | | 2 | 1 | 5-1438735-0 | 2LIT-14A464-SD-082 |
| | 45 | | 43 | | | | | 38 | | 36 | | | | | 31 | | | | | | 25 | 24 | | | | | | | | 16 | | 14 | | 12 | | | | | 7 | 6 | | | | 2 | 1 | 4-1438735-9 | 2LIT-14A464-SD-081 |
| | 45 | | 43 | | | | | 38 | | 36 | | | | 32 | 31 | | | | | | 25 | 24 | | | 21 | | 19 | 18 | 17 | 16 | | 14 | | 12 | | | | | 7 | 6 | | | | | | 1 | 4-1438735-8 | 2LIT-14A464-SD-080 |
| | 45 | | 43 | | | | 39 | 38 | 37 | 36 | | | | | 31 | | | | | | 25 | 24 | | | | | | 18 | 17 | 16 | | 14 | 13 | 12 | | | 9 | | 7 | 6 | | | | | 2 | 1 | 4-1438735-7 | 2LIT-14A464-SD-079 |
| | | | | 42 | | | | | | | | | | | | | | | | | | | | | | 20 | | 18 | | | | | 13 | | 11 | 10 | | | | | | | | | 2 | 1 | 3-1438735-8 | 2LIT-14A464-SD-078 |
| | | | | 42 | | | | | | | | | | | | | | | | | | | | | | 20 | | 18 | | | | | 13 | | 11 | 10 | | | | | | | | | | 1 | 3-1438735-7 | 2LIT-14A464-SD-077 |
| | 45 | | 43 | | | | 39 | 38 | 37 | 36 | | | | | 31 | | | | | | 25 | 24 | | | 21 | 20 | 19 | 18 | 17 | | | 14 | 13 | 12 | | | 9 | | | | | | | | 2 | 1 | 3-1438735-6 | 2LIT-14A464-SD-076 |
| | 45 | | 43 | | | | | 38 | | 36 | | | | | 31 | | | | | | 25 | 24 | | | 21 | 20 | 19 | 18 | 17 | | | 14 | | 12 | | | | | | | | | | | 2 | 1 | 3-1438735-5 | 2LIT-14A464-SD-075 |
| | | | 43 | 42 | | 40 | 39 | | 37 | | | | | | | | 29 | | | | | | | | | 20 | | 18 | | | 15 | 14 | | | 11 | 10 | 9 | 8 | 7 | | | 4 | 3 | 2 | 1 | 3-1438735-3 | 2LIT-14A464-SD-074 |
| | 45 | | 43 | | | | 39 | 38 | 37 | 36 | | | | | 31 | | | | | | 25 | 24 | | | | 20 | 19 | 18 | 17 | | | 14 | 13 | 12 | | | 9 | | | | | | | | 2 | 1 | 3-1438735-2 | 2LIT-14A464-SD-073 |
| | 45 | | 43 | | | | | 38 | | 36 | | | | | 31 | | | | | | 25 | 24 | | | 21 | 20 | 19 | 18 | 17 | 16 | | 14 | | 12 | | | | | 7 | | | | | | 2 | 1 | 3-1438735-1 | 2LIT-14A464-SD-072 |
| | 45 | | 43 | | | | 39 | 38 | 37 | 36 | | | | | 31 | | | | | | 25 | 24 | | | 21 | 20 | 19 | 18 | 17 | 16 | | 14 | 13 | 12 | | | 9 | | 7 | | | | | | 2 | 1 | 3-1438735-0 | 2LIT-14A464-SD-071 |
| | 45 | | 43 | | | | | 38 | | 36 | | | | | 31 | | | | | | 25 | 24 | | | 21 | 20 | 19 | | | 16 | | 14 | | 12 | | | | | 7 | | | | | | 2 | 1 | 2-1438735-9 | 2LIT-14A464-SD-070 |
| | 45 | | 43 | | | | 39 | 38 | 37 | 36 | | | | | 31 | | | | | | 25 | 24 | | | 21 | 20 | 19 | | | 16 | | 14 | 13 | 12 | | | 9 | | 7 | | | | | | 2 | 1 | 2-1438735-8 | 2LIT-14A464-SD-069 |
| | 45 | | 43 | | | | | 38 | | 36 | | | | | 31 | | | | | | 25 | 24 | | | | 20 | 19 | 18 | 17 | | | 14 | | 12 | | | | | | | | | | | 2 | 1 | 2-1438735-6 | 2LIT-14A464-SD-068 |
| | | | | | | | | | | | | | 33 | | | | | | | | | | | | | | | | | | | | 13 | | | | | | | | 6 | 5 | | | | | 2-1438735-5 | 2LIT-14A464-SD-067 |
| | 45 | 44 | 43 | 42 | | 40 | | 38 | 37 | 36 | | | 33 | | 31 | | | | | | | 24 | | 22 | 21 | 20 | | 18 | 17 | 16 | 15 | | | | | | 9 | 8 | | | | | | | 2 | | 2-1438735-4 | 2LIT-14A464-SD-066 |
| | | | 43 | | | | | | | | | | | | 31 | | 29 | | | | | | | | | | | 18 | | | | | | | | | | 8 | | | | | | | 2 | | 2-1438735-1 | 2LIT-14A464-SD-065 |
| | 45 | | 43 | | | | | 38 | | 36 | 35 | | | | 31 | | | | | | 25 | 24 | | | 21 | | | | | 16 | | 14 | | 12 | | | | | 7 | 6 | | | | 2 | 1 | 2-1438735-0 | 2LIT-14A464-SD-064 |
| | 45 | | 43 | | | | 39 | 38 | 37 | 36 | 35 | | | | 31 | | | | | | 25 | 24 | | | | | | 18 | 17 | 16 | | 14 | 13 | 12 | | | 9 | | 7 | 6 | | | | 2 | 1 | 1-1438735-9 | 2LIT-14A464-SD-063 |
| | 45 | | 43 | | | | | 38 | | 36 | 35 | | | 32 | 31 | | | | | | 25 | 24 | | | 21 | | 19 | 18 | 17 | 16 | | 14 | | 12 | | | | | 7 | 6 | | | | | | 1 | 1-1438735-8 | 2LIT-14A464-SD-062 |
| | 45 | | 43 | | | | | 38 | | 36 | 35 | | | | 31 | | | | | | 25 | 24 | | | | | | | | 16 | | 14 | | 12 | | | | | 7 | 6 | | | | 2 | 1 | 1-1438735-7 | 2LIT-14A464-SD-061 |
| | 45 | | 43 | | | | | 38 | | 36 | 35 | | | | 31 | | | | | | 25 | 24 | | | 21 | | 19 | | | 16 | | 14 | | 12 | | | | | 7 | 6 | | | | 2 | 1 | 1-1438735-6 | 2LIT-14A464-SD-060 |
| | 45 | | 43 | | | | | 38 | | 36 | 35 | | | | 31 | | | | | | 25 | 24 | | | | | | 18 | 17 | 16 | | 14 | | 12 | | | | | 7 | 6 | | | | 2 | 1 | 1-1438735-5 | 2LIT-14A464-SD-059 |
| | 45 | | 43 | | | | 39 | 38 | 37 | 36 | 35 | | | | 31 | | | | | | 25 | 24 | | | 21 | | 19 | 18 | 17 | 16 | | 14 | 13 | 12 | | | 9 | | 7 | 6 | | | | 2 | 1 | 1-1438735-4 | 2LIT-14A464-SD-058 |
| | 45 | | 43 | | | | | 38 | | 36 | 35 | | | | 31 | | | | | | 25 | 24 | | | 21 | | 19 | 18 | 17 | 16 | | 14 | | 12 | | | | | 7 | 6 | | | | 2 | 1 | 1-1438735-3 | 2LIT-14A464-SD-057 |
| | | | | 42 | | | | | 37 | | | | | | | | | | | | | | | | | 20 | | 18 | | | 15 | 14 | | | 11 | 10 | 9 | 8 | 7 | | | 4 | 3 | 2 | 1 | 1-1438735-2 | 2LIT-14A464-SD-056 |
| | 45 | | 43 | | | | | | | 36 | 35 | | | | 31 | | | | | | | 24 | | | 21 | | 19 | | | 16 | | 14 | | 12 | | | | | 7 | 6 | | | | | | 1 | 1-1438735-1 | 2LIT-14A464-SD-055 |
| | | | | | | | | | | | 35 | | | | | | | | 27 | | | | | | | | | | | | | | | | | | | | | | | | | 3 | | | 1-1438735-0 | 2LIT-14A464-SD-054 |
| | | | 43 | | | | | | | | | | | | 31 | | 29 | | | | | | | | | | | 18 | | | | | | | | | 9 | 8 | | | | | | | 2 | | 1438735-9 | 2LIT-14A464-SD-053 |
| | | | | | | | | | | | 35 | | | | | | | | 27 | | | | | | | | | | | | | | | | | | | | 7 | | | | | | | | 1438735-8 | 2LIT-14A464-SD-052 |

TERMINAL HOLE POSITION

PIN-OUT CHART KEYING OPTION "A" (4)

THIS DRAWING IS A CONTROLLED DOCUMENT FOR TYCO ELECTRONICS CORPORATION. IT IS SUBJECT TO CHANGE AND THE CONTROLLING ENGINEERING ORGANIZATION SHOULD BE CONTACTED FOR THE LATEST REVISION.

DIMENSIONS: mm

TOLERANCES UNLESS OTHERWISE SPECIFIED:
0 PLC ±-
1 PLC ±0.3
2 PLC ±0.10
3 PLC ±-
4 PLC ±-
ANGLES ±3°

MATERIAL - -
FINISH - -

| | | |
|---|---|---|
| DWN | R. VESTAL | 01AUG2003 |
| CHK | D. STRAUSSER | 01AUG2003 |
| APVD | D. STRAUSSER | 01AUG2003 |
| PRODUCT SPEC | - | |
| APPLICATION SPEC | - | |
| WEIGHT | - | |

Tyco Electronics
Tyco Electronics
Harrisburg, PA 17105-3608

NAME: 46 WAY PCM CONNECTOR HARNESS ASSEMBLY

| SIZE | CAGE CODE | DRAWING NO | RESTRICTED TO |
|---|---|---|---|
| A1 | 00779 | C-1438082 | - |

CUSTOMER DRAWING

| SCALE | SHEET | OF | REV |
|---|---|---|---|
| 4:1 | 3 | 5 | S11 |

THIS DRAWING IS UNPUBLISHED. RELEASED FOR PUBLICATION 20
© COPYRIGHT 20 BY TYCO ELECTRONICS CORPORATION. ALL RIGHTS RESERVED.

| LOC | DIST |
|---|---|
| FX | 00 |

REVISIONS

| P | LTR | DESCRIPTION | DATE | DWN | APVD |
|---|---|---|---|---|---|
| | - | SEE SHEET 1 | - | - | - |

| 46 | 45 | 44 | 43 | 42 | 41 | 40 | 39 | 38 | 37 | 36 | 35 | 34 | 33 | 32 | 31 | 30 | 29 | 28 | 27 | 26 | 25 | 24 | 23 | 22 | 21 | 20 | 19 | 18 | 17 | 16 | 15 | 14 | 13 | 12 | 11 | 10 | 9 | 8 | 7 | 6 | 5 | 4 | 3 | 2 | 1 | PART NUMBER | FORD PART NUMBER |
|---|---|---|---|---|---|---|---|---|---|---|---|---|---|---|---|---|---|---|---|---|---|---|---|---|---|---|---|---|---|---|---|---|---|---|---|---|---|---|---|---|---|---|---|---|---|---|---|
| | | 44 | 43 | 42 | 41 | | | 38 | | | | | | | | | | | | 26 | | | | | | | | | | | | | | | | | | | 7 | | 5 | | | | | 9-1438082-9 | 2LIT-14A464-TD-044 |
| | | 44 | | | | | | 38 | | | | | | | | | | | | 26 | | | | | | | | | | | | | | | | | | | 7 | | | | | | | 9-1438082-8 | 2LIT-14A464-TD-043 |
| | | | | | | 40 | 39 | 38 | | | 35 | 34 | | | | | | | | | | 24 | | | 21 | | | 18 | | 16 | 15 | | 13 | 12 | | | 9 | 8 | 7 | | 5 | | | | | 9-1438082-2 | 2LIT-14A464-TD-042 |
| 46 | | | 43 | 42 | | 40 | | | | | 35 | 34 | | | 31 | | | 28 | | | | 24 | | | 21 | | 19 | | | | | | | 12 | | | 9 | | | | 5 | 4 | | | 1 | 8-1438082-2 | 2LIT-14A464-TD-041 |
| | | | | | | 40 | 39 | 38 | | | 35 | 34 | | | | | | | | | | 24 | | | 21 | | | 18 | | 16 | 15 | | 13 | 12 | | | | 8 | 7 | | 5 | | | | | 8-1438082-1 | 2LIT-14A464-TD-040 |
| | | | | | | | | | | | 35 | | | | | | | | 27 | | | | | | | | | | | | | | | | | | 9 | | | 6 | | | 3 | | | 7-1438082-7 | 2LIT-14A464-TD-039 |
| | | | 43 | 42 | | | 39 | 38 | 37 | | | | | 32 | | | | 28 | | | | | | | | | 19 | 18 | 17 | 16 | | | | | | | 10 | 9 | | | | | | | | 7-1438082-6 | 2LIT-14A464-TD-038 |
| | | | 43 | 42 | | 40 | | | | | 35 | | | | | | | 28 | | | | 24 | | | 21 | | 19 | | | | | | | 12 | | | | | | | | 5 | 4 | | | 1 | 7-1438082-2 | 2LIT-14A464-TD-037 |
| | | | 43 | 42 | | | | | | | 35 | | | | | | | | | | | 24 | | | 21 | | 19 | | | | | | | 12 | | | | | | | | 5 | 4 | | | 1 | 7-1438082-1 | 2LIT-14A464-TD-036 |
| | | | 43 | 42 | | | 39 | 38 | 37 | | | | | | | | | 28 | | | | | | | | | 19 | 18 | 17 | 16 | | | 13 | | | 10 | 9 | | | | | | | | | 7-1438082-0 | 2LIT-14A464-TD-035 |
| | | | 43 | 42 | | | 39 | 38 | 37 | | | | | | | | | 28 | | | | | | | | | 19 | 18 | 17 | 16 | | | | | | 10 | 9 | | | | | | | | | 6-1438082-9 | 2LIT-14A464-TD-034 |
| | | 44 | | 42 | | | | 38 | | | | | | | | | | | | 26 | | | | | | | | | | | | | | | | | | | 7 | | | | | | | | 6-1438082-8 | 2LIT-14A464-TD-033 |
| | | | 43 | 42 | | | 39 | 38 | 37 | | | | | 32 | | | | 28 | | | | | | | | | 19 | 18 | 17 | 16 | | | 13 | | | 10 | 9 | | | | | | | | | 6-1438082-7 | 2LIT-14A464-TD-032 |
| | | 44 | | 42 | | | | 38 | | | | | | | | | | | 27 | 26 | | | | 22 | | | | | | | | | | | | | | | | | | | | | | | 6-1438082-5 | 2LIT-14A464-TD-031 |
| | | 44 | | 42 | | | | 38 | | | | | | | | | | | | 26 | | | | | | | | | | | | | | | | | | | | | | | | | | | 6-1438082-4 | 2LIT-14A464-TD-030 |
| | | | 43 | 42 | | | | 38 | 37 | | | | | 32 | | | | | | | | | | | | | 19 | 18 | 17 | 16 | | | | | | 10 | 9 | | | | | | | | | 6-1438082-0 | 2LIT-14A464-TD-029 |
| | | | 43 | 42 | | | 39 | 38 | 37 | | | | | 32 | | | | | | | | | | | | | 19 | 18 | 17 | 16 | | | 13 | | | 10 | 9 | | | | | | | | | 5-1438082-9 | 2LIT-14A464-TD-028 |
| | | | 43 | 42 | | | | 38 | 37 | | | | | 32 | | | | | | | | | | | | | 19 | 18 | 17 | 16 | | | | | | 10 | 9 | | | | | | | | | 5-1438082-8 | 2LIT-14A464-TD-027 |
| | | | 43 | 42 | | | 39 | 38 | | | | | | | | | | 28 | | | | | | | | | 19 | 18 | 17 | 16 | | | | | | 10 | 9 | | | | | | | | | 5-1438082-7 | 2LIT-14A464-TD-026 |
| 46 | 45 | | 43 | | | | | | | | | 34 | 33 | 32 | 31 | | | | 27 | | | | | 22 | 21 | 20 | 19 | 18 | | 16 | 15 | 14 | 13 | 12 | | 10 | 9 | 8 | 7 | | | | | | 1 | 5-1438082-4 | 2LIT-14A464-TD-025 |
| | | 44 | | 42 | | | | 38 | | | | | | | | | | | | | | | | | | | | | | | | | | | | | | | | | | | 3 | | | 5-1438082-3 | 2LIT-14A464-TD-024 |
| | | | | | | 40 | 39 | | | | 35 | 34 | | | | | | | | | | | | | 21 | | | 18 | | 16 | 15 | | 13 | | | | 9 | 8 | 7 | | | | | | | 5-1438082-1 | 2LIT-14A464-TD-023 |
| 46 | 45 | 44 | 43 | | 41 | 40 | | | | | | 34 | 33 | 32 | 31 | | 29 | | 27 | | | | | 22 | 21 | 20 | 19 | 18 | | 16 | 15 | 14 | 13 | 12 | | 10 | 9 | 8 | 7 | | | | | | 1 | 4-1438082-6 | 2LIT-14A464-TD-022 |
| | | 44 | | 42 | | | | 38 | | | | | | | | 30 | | | 27 | 26 | | | | 22 | | | | | | | | | | | | | | | | | | | | | | | 4-1438082-5 | 2LIT-14A464-TD-021 |
| | | 44 | | 42 | | | | 38 | | | | | | | | 30 | | | | | | | | | | | | | | | | | | | | | | | | | | | 3 | | | 4-1438082-4 | 2LIT-14A464-TD-020 |
| | | 44 | | 42 | | | | 38 | | | | | | | | 30 | | | | 26 | | | | | | | | | | | | | | | | | | | | | | | | | | | 4-1438082-3 | 2LIT-14A464-TD-019 |
| 46 | 45 | | 43 | | | | | | | | | 34 | 33 | 32 | 31 | | | | 27 | | | | | | 21 | 20 | 19 | 18 | | 16 | 15 | 14 | 13 | 12 | | 10 | 9 | 8 | 7 | | | | | | 1 | 4-1438082-1 | 2LIT-14A464-TD-018 |
| | | | | | | 40 | 39 | | | | 35 | 34 | | | | | | | | | | | | | 21 | | | 18 | | 16 | 15 | | 13 | | | | 9 | 8 | 7 | | 5 | | | | | 3-1438082-9 | 2LIT-14A464-TD-017 |
| | | 44 | | 42 | | | | 38 | 37 | | | | | | | 30 | | | 27 | 26 | | | | 22 | | | | | | | | | | | | | 9 | | | | | | | | | 2-1438082-8 | 2LIT-14A464-TD-016 |
| | | 44 | | 42 | | | | 38 | 37 | | | | | | | 30 | | | | | | | | | | | | | | | | | | | | | 9 | | | | | | | | | 2-1438082-7 | 2LIT-14A464-TD-015 |
| | | 44 | | 42 | | | | 38 | 37 | | | | | | | 30 | | | | 26 | | | | | | | | | | | | | | | | | 9 | | | | | | | | | 2-1438082-6 | 2LIT-14A464-TD-014 |
| | | | 43 | 42 | | | 39 | 38 | 37 | | | | 33 | 32 | | | | 28 | 27 | 26 | | | | 22 | 21 | 20 | 19 | 18 | 17 | 16 | | | 13 | | | 10 | | | | | | | | | | 2-1438082-4 | 2LIT-14A464-TD-013 |
| 46 | 45 | 44 | 43 | | | | | | | | | 34 | 33 | 32 | 31 | | | | 27 | | | | | 22 | 21 | 20 | 19 | 18 | | | 15 | 14 | 13 | 12 | | 10 | 9 | 8 | 7 | | | | | | 1 | 2-1438082-1 | 2LIT-14A464-TD-012 |
| 46 | 45 | 44 | 43 | | | | | | | | | 34 | 33 | 32 | 31 | | | | 27 | | | | | 22 | 21 | 20 | 19 | 18 | | 16 | 15 | 14 | 13 | 12 | | 10 | 9 | 8 | 7 | | | | | | 1 | 2-1438082-0 | 2LIT-14A464-TD-011 |
| | | | 43 | 42 | | | 39 | 38 | 37 | | | | | | | | | 28 | | | | | | | | | 19 | 18 | 17 | 16 | | | | | | 10 | | | | | | | | | | 1-1438082-7 | 2LIT-14A464-TD-010 |
| | | | 43 | 42 | | | 39 | 38 | 37 | | | | | 32 | | | | 28 | 27 | 26 | | | | | 21 | 20 | 19 | 18 | 17 | 16 | | | 13 | | | 10 | | | | | | | | | | 1-1438082-6 | 2LIT-14A464-TD-009 |
| | | | 43 | 42 | | | 39 | 38 | 37 | | | | | 32 | | | | 28 | | | | | | | | | 19 | 18 | 17 | 16 | | | 13 | | | 10 | | | | | | | | | | 1-1438082-5 | 2LIT-14A464-TD-008 |
| | | | 43 | 42 | | | | 38 | 37 | | | | | 32 | | | | | | | | | | | | | 19 | 18 | 17 | 16 | | | | | | 10 | | | | | | | | | | 1-1438082-4 | 2LIT-14A464-TD-007 |
| 46 | 45 | 44 | 43 | | | | | | | | | 34 | 33 | 32 | 31 | | | | 27 | | | | | 22 | 21 | 20 | 19 | 18 | | | 15 | 14 | 13 | 12 | | 10 | 9 | 8 | 7 | | | | | | 1 | 1-1438082-3 | 2LIT-14A464-TD-006 |
| 46 | 45 | 44 | 43 | | | | | | | | | 34 | 33 | 32 | 31 | | | | 27 | | | | | 22 | 21 | 20 | 19 | 18 | | 16 | 15 | 14 | 13 | 12 | | 10 | 9 | 8 | 7 | | | | | | 1 | 1-1438082-2 | 2LIT-14A464-TD-005 |
| | | | 43 | 42 | | | 39 | 38 | | | | | | | | | | 28 | | | | | | | | | | 18 | 17 | 16 | | | | | | 10 | | | | | | | | | | 1438082-9 | 2LIT-14A464-TD-004 |
| | | | | | | | | | | | | | | 32 | | | | | | | | | | | | | | | | | | | | | | | | | | | | | | | | | 1438082-8 | 2LIT-14A464-TD-003 |
| | | | | | | | | | | | | 34 | 33 | 32 | 31 | | | | 27 | | | | | 22 | 21 | 20 | 19 | 18 | | 16 | 15 | 14 | 13 | 12 | | 10 | 9 | 8 | 7 | | | | | | 1 | 1438082-7 | 2LIT-14A464-TD-002 |
| | | | | | | | | | | | | 34 | 33 | 32 | 31 | | | | 27 | | | | | 22 | 21 | 20 | 19 | 18 | | | 15 | 14 | 13 | 12 | | 10 | 9 | 8 | 7 | | | | | | 1 | 1-1438082-0 | 2LIT-14A464-TD-001 |
| | | | | | | | | | | | | | | | | | | | | | | | | | | | | | | | | | | | | | | | | | | | | | | 1438082-2 | 2LIT-14A464-TD-000 |
| TERMINAL HOLE POSITION | | | | | | | | | | | | | | | | | | | | | | | | | | | | | | | | | | | | | | | | | | | | | | | |

PIN-OUT CHART KEYING OPTION "B" (4)

THIS DRAWING IS A CONTROLLED DOCUMENT FOR TYCO ELECTRONICS CORPORATION. IT IS SUBJECT TO CHANGE AND THE CONTROLLING ENGINEERING ORGANIZATION SHOULD BE CONTACTED FOR THE LATEST REVISION.

DIMENSIONS: mm

TOLERANCES UNLESS OTHERWISE SPECIFIED:
0 PLC ±-
1 PLC ±0.3
2 PLC ±0.10
3 PLC ±-
4 PLC ±-
ANGLES ±1°

MATERIAL - -

FINISH - -

DWN R. VESTAL 01AUG2003
CHK D. STRAUSSER 01AUG2003
APVD D. STRAUSSER 01AUG2003

PRODUCT SPEC -

APPLICATION SPEC -

WEIGHT -

CUSTOMER DRAWING

Tyco Electronics
Tyco Electronics
Harrisburg, PA 17105-3608

NAME
46 WAY PCM
CONNECTOR HARNESS ASSEMBLY

| SIZE | CAGE CODE | DRAWING NO | RESTRICTED TO |
|---|---|---|---|
| A1 | 00779 | C-1438082 | - |

SCALE 4:1 SHEET 4 OF 5 REV S11

THIS DRAWING IS UNPUBLISHED. RELEASED FOR PUBLICATION 20
© COPYRIGHT 20 BY TYCO ELECTRONICS CORPORATION. ALL RIGHTS RESERVED.

| LOC | DIST |
|---|---|
| FX | 00 |

REVISIONS

| P | LTR | DESCRIPTION | DATE | DWN | APVD |
|---|---|---|---|---|---|
| | - | SEE SHEET 1 | - | - | - |

| 46 | 45 | 44 | 43 | 42 | 41 | 40 | 39 | 38 | 37 | 36 | 35 | 34 | 33 | 32 | 31 | 30 | 29 | 28 | 27 | 26 | 25 | 24 | 23 | 22 | 21 | 20 | 19 | 18 | 17 | 16 | 15 | 14 | 13 | 12 | 11 | 10 | 9 | 8 | 7 | 6 | 5 | 4 | 3 | 2 | 1 | PART NUMBER | FORD PART NUMBER |
|---|---|---|---|---|---|---|---|---|---|---|---|---|---|---|---|---|---|---|---|---|---|---|---|---|---|---|---|---|---|---|---|---|---|---|---|---|---|---|---|---|---|---|---|---|---|---|---|
| | 45 | 44 | 43 | 42 | 41 | | | 38 | | | | | | | | | | | 27 | | | | | | | | 19 | | | | | | | | | | | | 7 | | 5 | | | | | | 7-1438735-7 | 2LIT-14A464-TD-086 |
| | | 44 | | 42 | | | | 38 | | | | | | | | | | | 27 | | | | | | | | | | | | | | | | | | | | 7 | | 5 | | | | | | 7-1438735-6 | 2LIT-14A464-TD-085 |
| | 45 | 44 | 43 | 42 | 41 | | | 38 | | | | | | | | | | | | | | | | | | | 19 | | | | | | | | | | | | 7 | | 5 | 4 | | | | | 7-1438735-5 | 2LIT-14A464-TD-084 |
| | | 44 | | 42 | | | | 38 | | | | | | | | | | | | | | | | | | | 19 | | | | | | | | | | | | 7 | | 5 | 4 | | | | | 7-1438735-4 | 2LIT-14A464-TD-083 |
| | | 44 | 43 | 42 | 41 | | | 38 | | | | | | | | | | | | | | | | | | | | | | | | | | | | | | | 7 | | 5 | 4 | | | | | 7-1438735-3 | 2LIT-14A464-TD-082 |
| | | 44 | | 42 | | | | 38 | | | | | | | | | | | 27 | | | | | 22 | | | | | | | | | | | | | | | 7 | | 5 | 4 | | | | | 7-1438735-2 | 2LIT-14A464-TD-081 |
| | | 44 | | 42 | | | | 38 | | | | | | | | | | | | | | | | | | | | | | | | | | | | | | | 7 | | 5 | 4 | | | | | 7-1438735-1 | 2LIT-14A464-TD-080 |
| | | | 43 | 42 | | | | | | | | | | | | | | | | 26 | | | | | | | | | | | | | | | | | | | 7 | 6 | | 4 | 3 | | | | 7-1438735-0 | 2LIT-14A464-TD-079 |
| | | | | | | | | | | | | | | | | | | | | 26 | | | | | | | | | | | | | | | | | | | 7 | 6 | | | 3 | | | | 6-1438735-9 | 2LIT-14A464-TD-078 |
| | | 44 | 43 | 42 | | | | | | | | | | | | | | | | 26 | | | | | | | 19 | | | | | | | | | | | | 7 | 6 | | 4 | | | | | 6-1438735-8 | 2LIT-14A464-TD-077 |
| | 45 | 44 | 43 | 42 | 41 | | | 38 | | | | | | | | | | | | | | | | | | | 19 | | | | | | | | | | | | 7 | | 5 | | | | | | 6-1438735-6 | 2LIT-14A464-TD-076 |
| | | 44 | | 42 | | | | 38 | | | | | | | | | | | | | | | | | | | 19 | | | | | | | | | | | | 7 | | 5 | | | | | | 6-1438735-5 | 2LIT-14A464-TD-075 |
| | | 44 | 43 | 42 | 41 | | | 38 | | | | | | | | | | | | | | | | | | | 19 | | | | | | | | | | | | 7 | | 5 | | | | | | 6-1438735-4 | 2LIT-14A464-TD-074 |
| | | 44 | | | | | | 38 | | | | | | | | | | | 27 | | | | | 22 | | | 19 | | | | | | | | | | | 8 | | 6 | | | | | | 6-1438735-0 | 2LIT-14A464-TD-073 |
| | | 44 | | | | | | 38 | | | | | | | | | | | 27 | | | | | 22 | | | 19 | | | | | | | | | | | 8 | 7 | 6 | | | | | | 5-1438735-9 | 2LIT-14A464-TD-072 |
| | | 44 | | | | | | | | | | | | | | | | | | 26 | | | | 22 | | | 19 | | | | | | | | | | | | | 6 | | | | | | 5-1438735-8 | 2LIT-14A464-TD-071 |
| | | 44 | | | | | | | | | | | | | | | | | | 26 | | | | 22 | | | 19 | | | | | | | | | | | | 7 | 6 | | | | | | 5-1438735-7 | 2LIT-14A464-TD-070 |
| | | 44 | | | | | | 38 | | | | | | | | | | | 27 | 26 | | | | 22 | | | 19 | | | | | | | | | | | | | 6 | | | | | | 5-1438735-6 | 2LIT-14A464-TD-069 |
| | | 44 | | | | | | 38 | | | | | | | | | | | 27 | 26 | | | | 22 | | | 19 | | | | | | | | | | | | 7 | 6 | | | | | | 5-1438735-5 | 2LIT-14A464-TD-068 |
| | | 44 | | | | | | | | | | | | | | | | | | 26 | | | | | | | 19 | | | | | | | | | | | | 7 | 6 | | | | | | 5-1438735-4 | 2LIT-14A464-TD-067 |
| | | 44 | | | | | | | | | | | | | | | | | | 26 | | | | | | | 19 | | | | | | | | | | | | | 6 | | | | | | 5-1438735-3 | 2LIT-14A464-TD-066 |
| | | | 43 | 42 | | | | | | | | | | | | | | | | 26 | | | | | | | | | | | | | | | | | | | 7 | 6 | | 4 | | | | | 5-1438735-2 | 2LIT-14A464-TD-065 |
| | | | | | | | | | | | | | | | | | | | | 26 | | | | | | | | | | | | | | | | | | | 7 | 6 | | | | | | | 5-1438735-1 | 2LIT-14A464-TD-064 |
| | | 44 | | 42 | | | | 38 | | | | | | | | | | | 27 | | | | | 22 | | | | | | | | | | | | | | | 7 | | 5 | | | | | | 4-1438735-6 | 2LIT-14A464-TD-063 |
| | | 44 | | 42 | | | | 38 | | | | | | | | | | | | | | | | | | | | | | | | | | | | | | | 7 | | 5 | | | | | | 4-1438735-5 | 2LIT-14A464-TD-062 |
| | | 44 | | 42 | | | | 38 | | | | | | | | | | | 27 | 26 | | | | 22 | | | 19 | | | | | | | | | | | 8 | | 6 | | | | | | 4-1438735-4 | 2LIT-14A464-TD-061 |
| | | 44 | | 42 | | | | 38 | | | | | | | | | | | 27 | 26 | | | | 22 | | | 19 | | | | | | | | | | | 8 | 7 | 6 | | | | | | 4-1438735-3 | 2LIT-14A464-TD-060 |
| | | 44 | | | | | | | | | | | | | | | | | | 26 | | | | | | | 19 | | | | | | | | | | | 8 | 7 | 6 | | | | | | 4-1438735-2 | 2LIT-14A464-TD-059 |
| | | 44 | | | | | | | | | | | | | | | | | | 26 | | | | | | | 19 | | | | | | | | | | | 8 | | 6 | | | | | | 4-1438735-1 | 2LIT-14A464-TD-058 |
| | | | 43 | 42 | | | | | | | | | | | | | | | | 26 | | | | | | | | | | | | | | | | | | | 8 | 7 | 6 | 5 | | | | | 4-1438735-0 | 2LIT-14A464-TD-057 |
| | | | | | | | | | | | | | | | | | | | | 26 | | | | | | | | | | | | | | | | | | | 8 | 7 | 6 | | | | | | 3-1438735-9 | 2LIT-14A464-TD-056 |
| 46 | 45 | 44 | 43 | | | | | | | | | 34 | 33 | 32 | 31 | | | | 27 | | 25 | | | | | 20 | | | | 16 | | 14 | 13 | 12 | | 10 | 9 | 8 | 7 | 6 | | | | | | 1 | 3-1438735-4 | 2LIT-14A464-TD-055 |
| 46 | 45 | | 43 | | | | | | | | | 34 | 33 | 32 | 31 | | | | 27 | | 25 | | | | | 20 | | | | 16 | | 14 | 13 | 12 | | 10 | 9 | 8 | 7 | 6 | | | | | | 1 | 2-1438735-7 | 2LIT-14A464-TD-054 |
| 46 | 45 | 44 | 43 | 42 | | 40 | | | | | 35 | 34 | 33 | 32 | 31 | | | 28 | | | | 24 | | | 21 | | 19 | | | | | | | 12 | | | 9 | | | | 5 | 4 | | | 1 | 2-1438735-3 | 2LIT-14A464-TD-053 |
| | 45 | 44 | 43 | 42 | | 40 | | | | | | | 33 | 32 | 31 | | | 28 | | | | | | | 21 | | 19 | | | | | | | | | | 9 | | | | 5 | 4 | | | | 2-1438735-2 | 2LIT-14A464-TD-052 |
| | | 44 | | 42 | | | | 38 | | | | | | | | | | | 27 | 26 | | | | 22 | | | | | | | | | | | | | | | 7 | | 5 | | | | | | 1438735-7 | 2LIT-14A464-TD-051 |
| | | | | | | 40 | 39 | 38 | | | 35 | 34 | | | | | | | | | | 24 | | | 21 | | | 18 | | | | | 13 | 12 | | | 9 | 8 | 7 | | 5 | | | | | | 1438735-6 | 2LIT-14A464-TD-050 |
| | | 44 | | 42 | | | | 38 | | | | | | | | | | | 27 | 26 | | | | 22 | | | | | | | | | | | | | | | | | 5 | | | | | | 1438735-5 | 2LIT-14A464-TD-049 |
| | | 44 | | 42 | | | | 38 | | | | | | | | | | | | 26 | | | | 22 | | | | | | | | | | | | | | | | | 5 | | | | | | 1438735-4 | 2LIT-14A464-TD-048 |
| | | 44 | | 42 | | | | 38 | | | | | | | | | | | | 26 | | | | | | | | | | | | | | | | | | | 7 | | 5 | | | | | | 1438735-3 | 2LIT-14A464-TD-047 |
| | | 44 | | 42 | | | | 38 | | | | | | | | | | | | 26 | | | | | | | | | | | | | | | | | | | | | 5 | | | | | | 1438735-2 | 2LIT-14A464-TD-046 |
| | | 44 | | | | | | 38 | | | | | | | | | 29 | 28 | | 26 | | | | | | | | | | | | | | | | | | | 7 | | | | 3 | | | | 1438735-1 | 2LIT-14A464-TD-045 |
| TERMINAL HOLE POSITION | | | | | | | | | | | | | | | | | | | | | | | | | | | | | | | | | | | | | | | | | | | | | | | |

PIN-OUT CHART KEYING OPTION "B" △4

THIS DRAWING IS A CONTROLLED DOCUMENT FOR TYCO ELECTRONICS CORPORATION. IT IS SUBJECT TO CHANGE AND THE CONTROLLING ENGINEERING ORGANIZATION SHOULD BE CONTACTED FOR THE LATEST REVISION.

DIMENSIONS: mm

TOLERANCES UNLESS OTHERWISE SPECIFIED:
0 PLC ±-
1 PLC ±0.3
2 PLC ±0.10
3 PLC ±-
4 PLC ±-
ANGLES ±1°

MATERIAL: SEE TABLE -
FINISH: SEE TABLE -

DWN A. HOLT 22OCT2007
CHK S. MANKARYOS 22OCT2007
APVD S. MANKARYOS 22OCT2007
PRODUCT SPEC -
APPLICATION SPEC -
WEIGHT -

Tyco Electronics
Tyco Electronics
Harrisburg, PA 17105-3608

NAME: 46 WAY PCM CONNECTOR HARNESS ASSEMBLY

| SIZE | CAGE CODE | DRAWING NO | RESTRICTED TO |
|---|---|---|---|
| A1 | 00779 | C-1438082 | - |

CUSTOMER DRAWING

| SCALE | SHEET | OF | REV |
|---|---|---|---|
| 4:1 | 5 | 5 | S11 |

# Mouser Electronics

Authorized Distributor

Click to View Pricing, Inventory, Delivery & Lifecycle Information:

TE Connectivity:

2-1438082-3