THIS DRAWING IS UNPUBLISHED. RELEASED FOR PUBLICATION 20
© COPYRIGHT 20 BY - ALL RIGHTS RESERVED.

REVISIONS					
P	LTR	DESCRIPTION	DATE	DWN	APVD
	H1	REVISED PER ECR-16-011494	22JUN2017	NK	CX

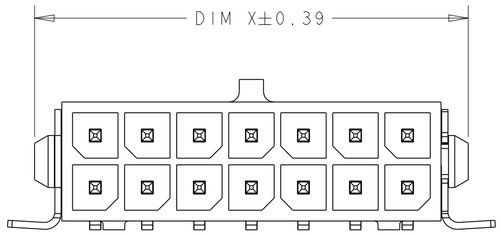

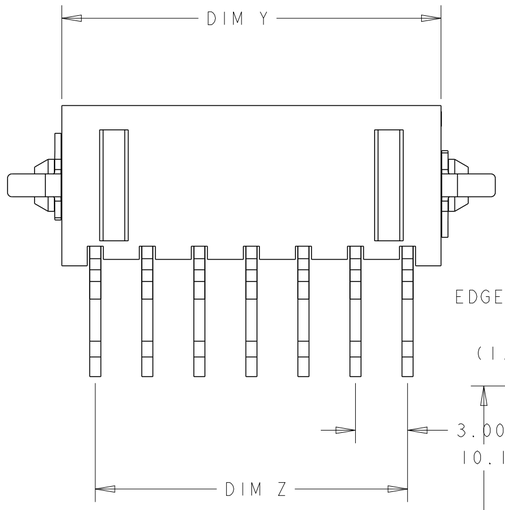

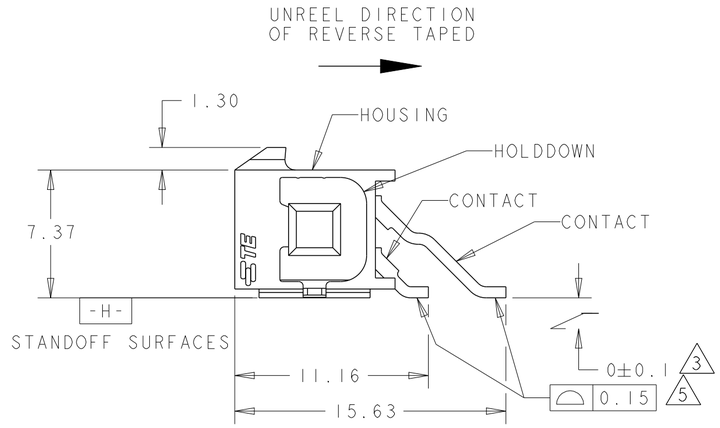

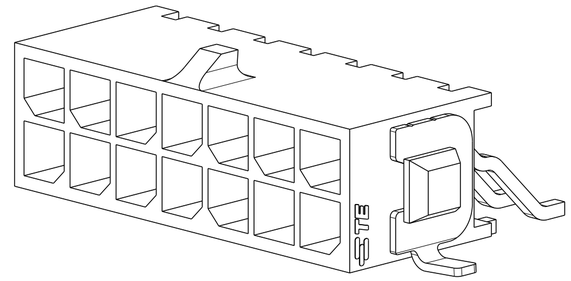

SCALE 5:1

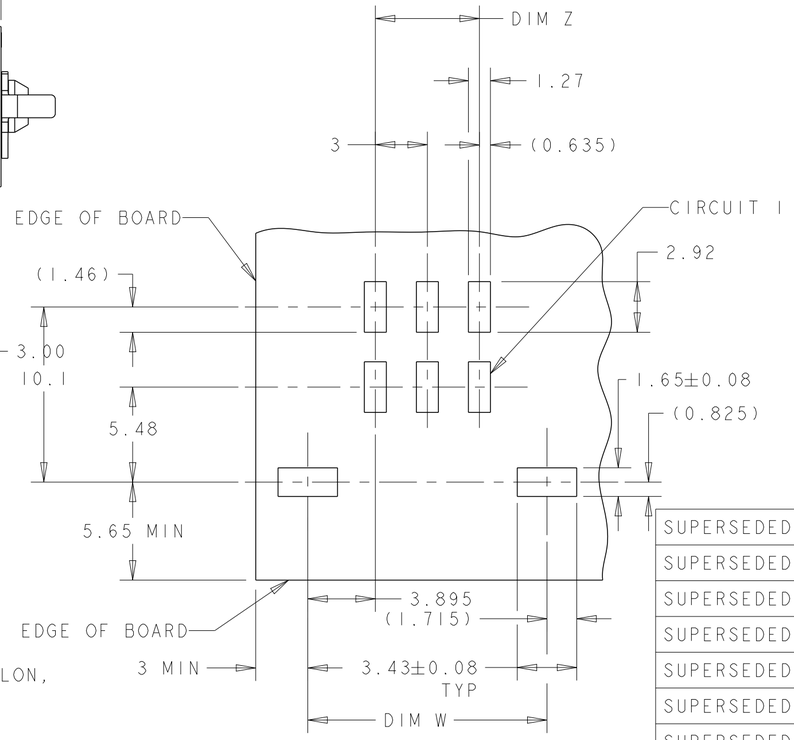

RECOMMENDED PCB LAYOUT (COMPONENT SIDE) 4

PART NUMBER	NO. OF POSN.	DIM X	DIM Z	DIM W	DIM Y	FINISH	PACKAGING
6-794629-8	8	16.00	9.00	16.00	12.86	6	REVERSE TAPED
6-794629-4	4	10.00	3.00	10.00	6.86	6	REVERSE TAPED
5-794629-4	24	40.00	33.00	40.00	36.86	6	TAPED
5-794629-2	22	37.00	30.00	37.00	33.86	6	TAPED
5-794629-0	20	34.00	27.00	34.00	30.86	6	TAPED
4-794629-8	18	31.00	24.00	31.00	27.86	6	TAPED
4-794629-6	16	28.00	21.00	28.00	24.86	6	TAPED
4-794629-4	14	25.00	18.00	25.00	21.86	6	TAPED
4-794629-2	12	22.00	15.00	22.00	18.86	6	TAPED
4-794629-0	10	19.00	12.00	19.00	15.86	6	TAPED
3-794629-8	8	16.00	9.00	16.00	12.86	6	TAPED
3-794629-6	6	13.00	6.00	13.00	9.86	6	TAPED
3-794629-4	4	10.00	3.00	10.00	6.86	6	TAPED
3-794629-2	2	7.00	-	7.79	3.86	6	LOOSE PIECE
~~2-794629-4~~	24	40.00	33.00	40.00	36.86	2	TAPED
~~2-794629-2~~	22	37.00	30.00	37.00	33.86	2	TAPED
~~2-794629-0~~	20	34.00	27.00	34.00	30.86	2	TAPED
~~1-794629-8~~	18	31.00	24.00	31.00	27.86	2	TAPED
~~1-794629-6~~	16	28.00	21.00	28.00	24.86	2	TAPED
~~1-794629-4~~	14	25.00	18.00	25.00	21.86	2	TAPED
~~1-794629-2~~	12	22.00	15.00	22.00	18.86	2	TAPED
~~1-794629-0~~	10	19.00	12.00	19.00	15.86	2	TAPED
~~794629-8~~	8	16.00	9.00	16.00	12.86	2	TAPED
~~794629-6~~	6	13.00	6.00	13.00	9.86	2	TAPED
~~794629-4~~	4	10.00	3.00	10.00	6.86	2	TAPED
~~794629-2~~	2	7.00	-	7.79	3.86	2	LOOSE PIECE
							SUPERSEDED BY 5-794629-4
							SUPERSEDED BY 5-794629-2
							SUPERSEDED BY 5-794629-0
							SUPERSEDED BY 4-794629-8
							SUPERSEDED BY 4-794629-6
							SUPERSEDED BY 4-794629-4
							SUPERSEDED BY 4-794629-2
							SUPERSEDED BY 4-794629-0
							SUPERSEDED BY 3-794629-8
							SUPERSEDED BY 3-794629-6
							SUPERSEDED BY 3-794629-4
							SUPERSEDED BY 3-794629-2

1 MATERIAL;
CONTACTS - BRASS.
HOUSING - UL 94V-0 RATED HIGH TEMP NYLON, COLOR; BLACK.
HOLDDOWNS - PHOSPHOR BRONZE.

2 PLATING;
CONTACTS - 0.76µm MINIMUM GOLD OVER 2.54µm MINIMUM NICKEL ON MATING AREA. 2.54µm TIN-LEAD MINIMUM OVER 2.54µm NICKEL MINIMUM ON SOLDER TAIL.
HOLDOWNS - 2.54µm TIN-LEAD.

3 DIMENSION APPLIES TO SOLDERTAIL SURFACES AND STANDOFF SURFACES.

4 RECOMMENDED PC BOARD THICKNESS OF 1.57.

5 ALL SOLDERTAILS AND HOLDDOWNS.

6 PLATING;
CONTACTS - 0.76µm MINIMUM GOLD OVER 2.54µm MINIMUM NICKEL ON MATING AREA. 2.54µm MATTE TIN MINIMUM OVER 2.54µm NICKEL MINIMUM ON SOLDER TAIL.
HOLDOWNS - 2.54µm MATTE TIN.

THIS DRAWING IS A CONTROLLED DOCUMENT.

DIMENSIONS: mm

TOLERANCES UNLESS OTHERWISE SPECIFIED:
0 PLC ±-
1 PLC ±-
2 PLC ±0.13
3 PLC ±-
4 PLC ±-
ANGLES ±-

MATERIAL 1

FINISH SEE TABLE

DWN K. WHITAKER 19MAR2003
CHK C. JONES 19MAR2003
APVD C. JONES 19MAR2003
PRODUCT SPEC -
APPLICATION SPEC -
WEIGHT -

TE Connectivity

NAME SURFACE MOUNT, RIGHT ANGLE, SURFACE MOUNT HOLDDOWN, ASSEMBLY, 30 GOLD HEADER, DUAL ROW, MICRO MATE-N-LOK™

SIZE	CAGE CODE	DRAWING NO	RESTRICTED TO
A2	00779	C-794629	-

CUSTOMER DRAWING SCALE 4:1 SHEET 1 OF 1 REV H1

1471-9 (3/13)

Mouser Electronics

Authorized Distributor

Click to View Pricing, Inventory, Delivery & Lifecycle Information:

TE Connectivity:

3-794629-2