© – TE Connectivity. All Rights Reserved.

REVISIONS					
P	LTR	DESCRIPTION	DATE	DWN	APVD
	K3	EC0-14-018192	27FEB2020	IT	SH

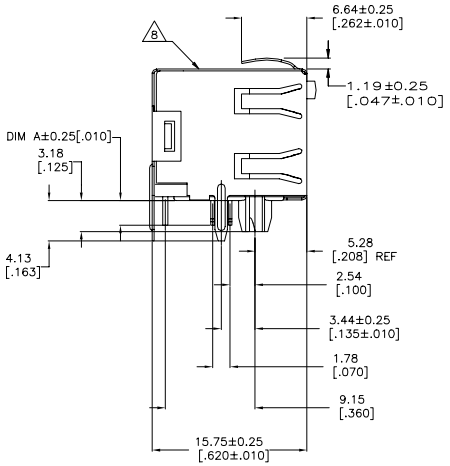

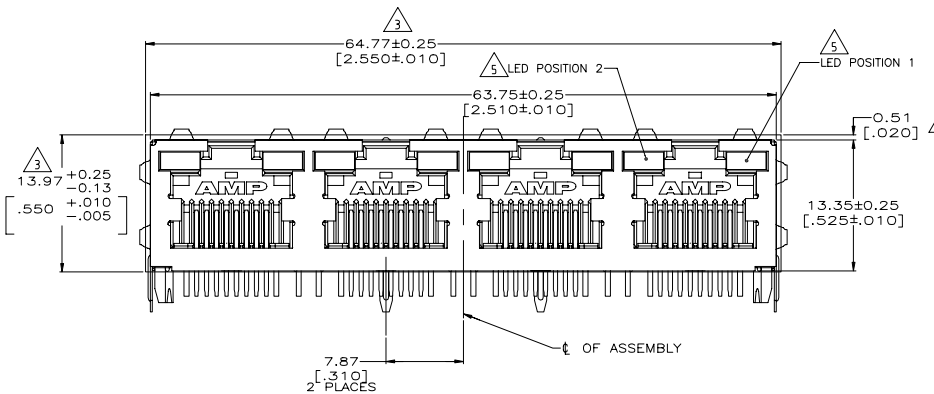

1. MATERIAL:
   HOUSING – HIGH TEMPERATURE THERMOPLASTIC, BLACK, UL94V-0.
   TERMINALS – 0.36[.014] THICK PHOS BRONZE PLATED WITH 3.81μm[.000150] MINIMUM THICK BRIGHT TIN LEAD IN SOLDER AREA. 1.27μm [.000050] MINIMUM GOLD IN LOCALIZED PLATE AREA. ENTIRE TERMINAL PLATED WITH 1.27μm [.000050] MINIMUM THICK NICKEL.
   SHIELD – 0.196[.0077] THICK COPPER ZINC ALLOY PREPLATED WITH 1.27μm[.000050] MINIMUM SATIN NICKEL WITH 2.03μm[.000080] MINIMUM TIN POST DIPPED ON PCB GROUND TABS.
   LIGHT EMITTING DIODE (LED) – DIFFUSED EPOXY LENS, 0.51 x 0.51[.020 x .020] CARBON STEEL WIREFRAME LEADS PLATED WITH 8.89μm[.000350] TIN/COPPER OVER 2.03μm[.000080] SILVER OVER 1.02μm[.000040] NICKEL UNDERPLATE OVER 2.03μm[.000080] COPPER UNDERPLATE.
2. JACK CAVITY CONFORMS TO FCC RULES AND REGULATIIONS PART 68, SUBPART F.
3. SUGGESTED PANEL OPENING DIMENSIONS.
4. SUGGESTED CLEARANCE BETWEEN TOP OF CONNECTOR AND TOP PANEL OPENING.
5. SEE TABLE FOR COLOR OF LEDS AND NUMBER REQUIRED.
6. THIS MODULAR JACK WITH INTEGRATED LED IS NOT IR REFLOW SOLDERING PROCESS COMPATIBLE.
7. OBSOLETE PARTS: OBSOLETE CIS STREAMLINING PER D.RENAUD/D.SINISI
8. MANUFACTURING DATE CODE:
   LOCATED APPROX. AS SHOWN.
   FIRST 2 DIGITS= LAST 2 DIGITS OF YEAR.
   NEXT 2 DIGITS= MANUFACTURING WORK WEEK.
   LAST DIGIT= DAY OF WEEK WITH SUNDAY=1.

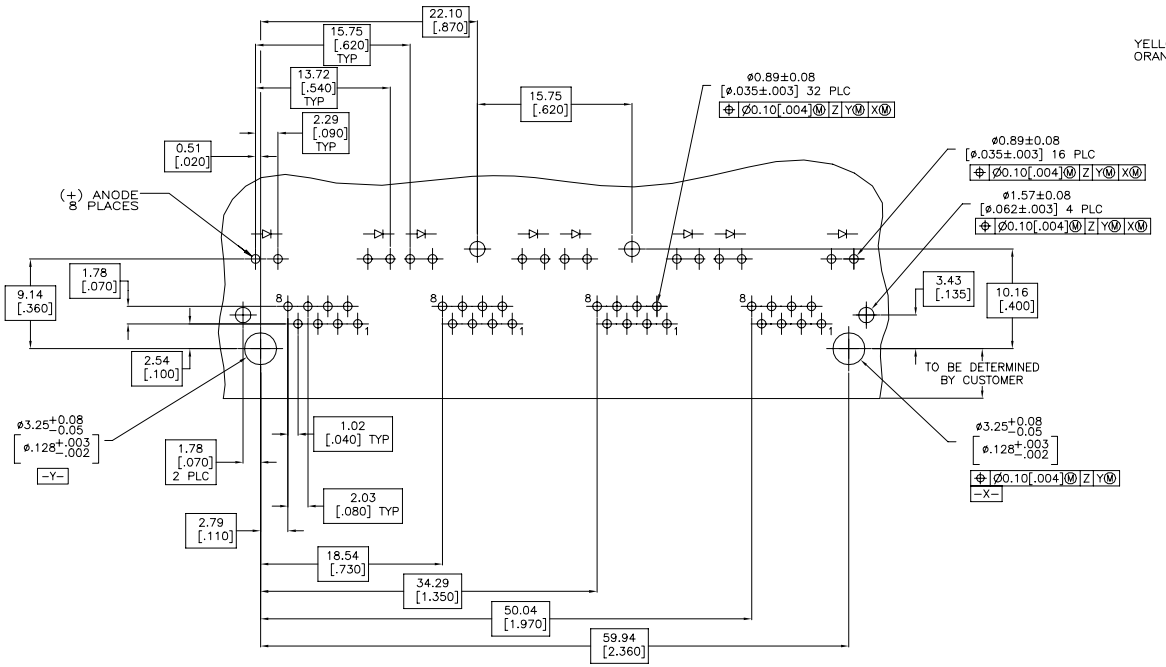

RECOMMENDED PRINTED CIRCUIT BOARD LAYOUT
(COMPONENT SIDE)

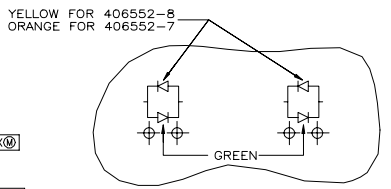

BI-COLOR LED CURRENT
DIAGRAM

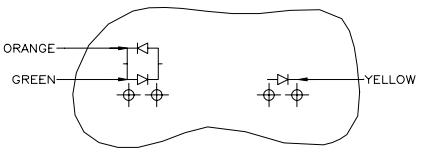

LED CURRENT DIAGRAM
406552-9 ONLY

	DIM A	SOLDERTAIL LENGTH	POSITION 2	POSITION 1	PART NUMBER
			INDICATOR COLOR FOR EACH HOUSING		
7 SUPERSEDED BY 1-5406552-4	.100		RED	GREEN	~~1-406552-4~~
SUPERSEDED BY 1-5406552-3	.100		GREEN/RED	GREEN/RED	~~1-406552-3~~
OBSOLETE	.120		YELLOW	GREEN	~~1-406552-1~~
7 SUPERSEDED BY 5406552-9	.100		GREEN/ORANGE	YELLOW	~~406552-9~~
	.100		GREEN/YELLOW	GREEN/YELLOW	406552-8
	.100		GREEN/ORANGE	GREEN/ORANGE	406552-7
OBSOLETE	.100		YELLOW	YELLOW	~~406552-6~~
	.100		GREEN	GREEN	406552-5
	.100		GREEN	YELLOW	406552-4
7 OBSOLETE	.100		YELLOW	–	~~406552-3~~
7 SUPERSEDED BY 5406552-2	.100		–	GREEN	~~406552-2~~
	.100		YELLOW	GREEN	406552-1

THIS DRAWING IS A CONTROLLED DOCUMENT.

DIMENSIONS: mm [INCHES]

TOLERANCES UNLESS OTHERWISE SPECIFIED: 0 PLC ± – ; 1 PLC ± – ; 2 PLC ± 0.25[.01] ; 3 PLC ± 0.13[.005] ; 4 PLC ± – ; ANGLES ± –

MATERIAL: SEE NOTE 1
FINISH: SEE NOTE 1

DRN T. SPRINKLE 23SEP97
CHK T. SPRINKLE 23SEP97
APVD M. DERSTINE 23SEP97
PRODUCT SPEC 108-1163-4
APPLICATION SPEC 114-2154
WEIGHT 0.000000
CUSTOMER DRAWING

TE Connectivity

NAME: INVERTED MODULAR JACK ASSEMBLY, 1X4, SHIELDED, PANEL GROUND, WITH LED

SIZE	CAGE CODE	DRAWING NO	RESTRICTED TO
A1	00779	C-406552	–

SCALE 4:1 SHEET 1 OF 1 REV K3

4805 (1/15)