THIS DRAWING IS UNPUBLISHED. RELEASED FOR PUBLICATION -
© COPYRIGHT - BY - ALL RIGHTS RESERVED.

Project No CA05-007 | LOC ES | DIST -

REVISIONS

P	LTR	DESCRIPTION	DATE	DWN	APVD
	0	NEW RELEASE	25OCT2005	A.Z	K.O
	A	REVISED ECO-13-010505	10APR13	J.L	I.Y

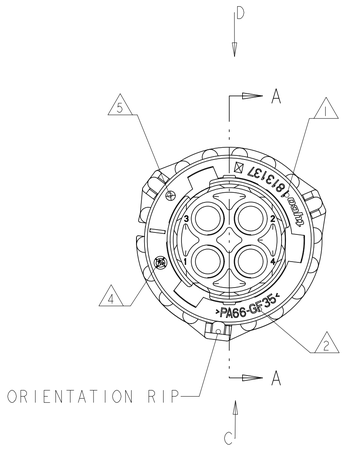

COUPLING RING IN PRE-LOCKED POSITION
(FITTING POSITION WITH PIN HOUSING)

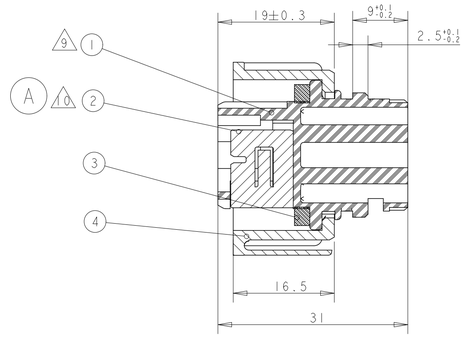

SECTION A-A

SECOND LOCKING DEVICE
IN PRE-LOCKED POSITION

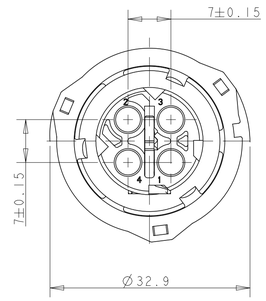

VIEW C
ROTATED

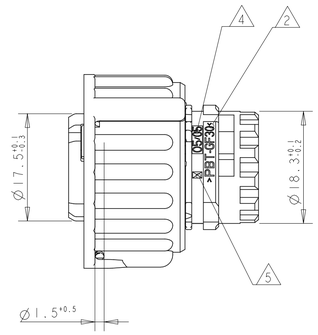

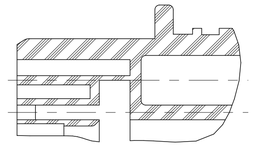

SECTION B-B

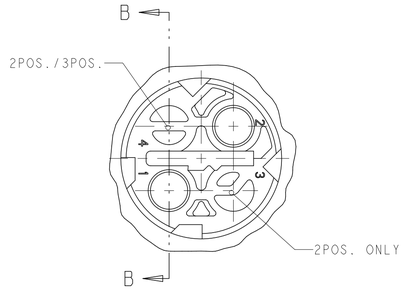

CLOSED CAVITY OF THE
2POS./3POS. SOCKET HOUSING

VIEW D
ROTATED

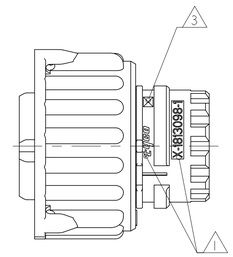

SECOND LOCKING DEVICE
IN LOCKED POSITION
10

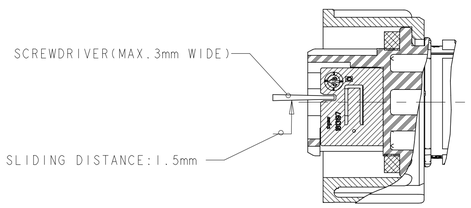

SECTION A-A

1	1	1	1	1	1	1	1	1	1	1	1	1	1	1	1	1	1	1	1	1	1	1	1	PA66-GF35	BLACK	COUPLING RING	4
1	1	1	1	1	1	1	1	1	1	1	1	1	1	1	1	1	1	1	1	1	1	1	1	SILICONE RUBBER	ORANGE	SEAL	3
													1	1	1	1	1	1	1	1	1	1	1	PA6/6T-GF25	YELLOW	SECOND LOCKING DEVICE	2
1													1											PBT-GF30	BLUE	2POS.SOCKET HOUSING(BLUE)	1
	1													1										PBT-GF30	BLUE	3POS.SOCKET HOUSING(BLUE)	1
		1													1									PBT-GF30	BLUE	4POS.SOCKET HOUSING(BLUE)	1
			1													1								PBT-GF30	GREEN	2POS.SOCKET HOUSING(GREEN)	1
				1													1							PBT-GF30	GREEN	3POS.SOCKET HOUSING(GREEN)	1
					1													1						PBT-GF30	GREEN	4POS.SOCKET HOUSING(GREEN)	1
						1													1					PBT-GF30	GREY	2POS.SOCKET HOUSING(GREY)	1
							1													1				PBT-GF30	GREY	3POS.SOCKET HOUSING(GREY)	1
								1													1			PBT-GF30	GREY	4POS.SOCKET HOUSING(GREY)	1
									1													1		PBT-GF30	BLACK	2POS.SOCKET HOUSING(BLACK)	1
										1													1	PBT-GF30	BLACK	3POS.SOCKET HOUSING(BLACK)	1
												1											1	PBT-GF30	BLACK	4POS.SOCKET HOUSING(BLACK)	1
8--3	8--2	8--1	7--3	7--2	7--1	6--3	6--2	6--1	5--3	5--2	5--1	4--3	4--2	4--1	3--3	3--2	3--1	2--3	2--2	2--1	1--3	1--2	1--1	MATERIAL	COLOR	DESCRIPTION	ITEM

NOTES:

1. TYCO LOGO AND TYCO NUMBER OF SINGLE PART
2. MATERIAL MARKING
3. REVISION OF THE MOULD
4. PRODUCTION DATE
5. CAVITY MARKING
6. FITS TO CONNECTORS ACC. TO DIN 72585/ISO 15170 FORM A AND B AND PIN-HOUSING 2-4POS. TYCO-PN 967402
7. FOR SUITABLE CONTACTS SEE DRAWING: TYCO-PN:1355065 MAX. WIRE THICKNESS:2.5qmm FLR FOR SUITABLE SEALS SEE DRAWING: TYCO-PN:1355070
8. BULK PACKING IN CARDBOARD BOX
9. CODING ACC.TO DIN 72585/ISO15170
10. (A) SECONDARY LOCK IS ONLY AVAILABLE FOR 1-1813099-X, 2-1813099-X, 3-1813099-X, 4-1813099-X. DETAIL SEE TABLE.

THIS DRAWING IS A CONTROLLED DOCUMENT.

DIMENSIONS: mm

TOLERANCES UNLESS OTHERWISE SPECIFIED: ALL GENERAL TOLERANCE ISO 8015

0-PLC	±0.2
1-PLC	±0.1
2-PLC	±0.01
3-PLC	±0.001
4-PLC	±0.0001
ANGLES	±1°00'

MATERIAL SEE TABLE -

FINISH - -

DWN	A.ZHANG	03JUN2005
CHK	R.ZHOU	25OCT2005
APVD	K.ODA	03NOV2005
PRODUCT SPEC	108-101006	
APPLICATION SPEC	114-18255-0	
WEIGHT	-	

TE Connectivity

NAME: 2.5mm SOCKET CONNECTOR,2-4POS WITH SECONDARY LOCKING -

SIZE	CAGE CODE	DRAWING NO	RESTRICTED TO
A1	00779	C-1813099	-

SCALE 2:1 | SHEET 1 OF 1 | REV A

4805 (3/11)

Mouser Electronics

Authorized Distributor

Click to View Pricing, Inventory, Delivery & Lifecycle Information:

TE Connectivity:

7-1813099-3