THIS DRAWING IS UNPUBLISHED. RELEASED FOR PUBLICATION DATE: - 2011
© COPYRIGHT 2011 - ALL RIGHTS RESERVED.

LOC	DIST
H	-

REVISIONS

P	LTR	DESCRIPTION	DATE	DWN	APVD
	H	ECR -13-008840	30AUG2013	SMT	RP

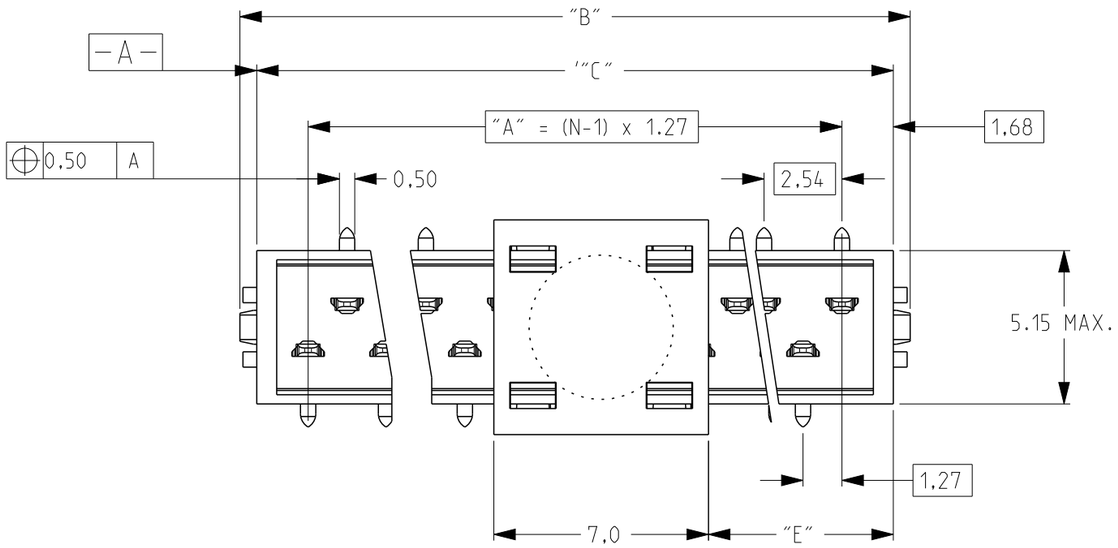

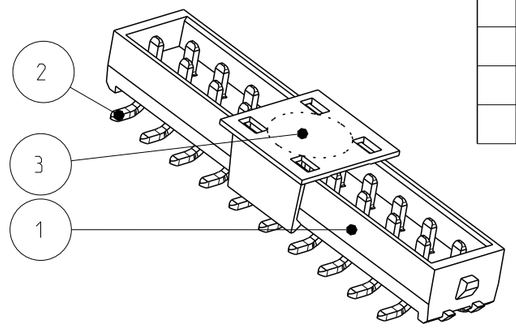

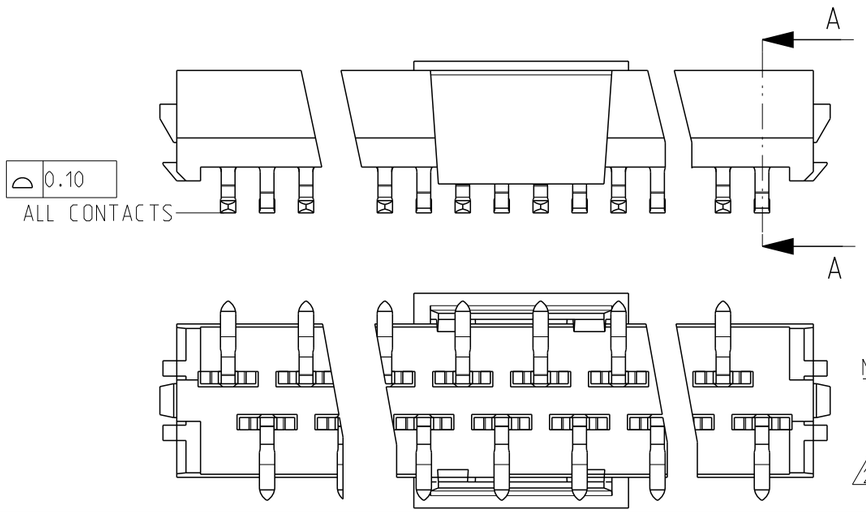

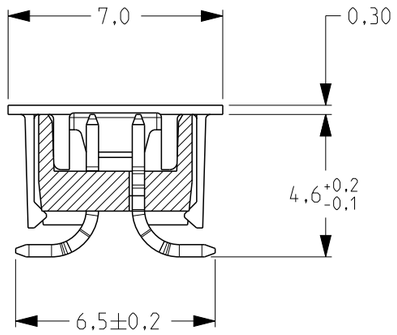

SECTION A-A

PACKAGING/REELING DIRECTION

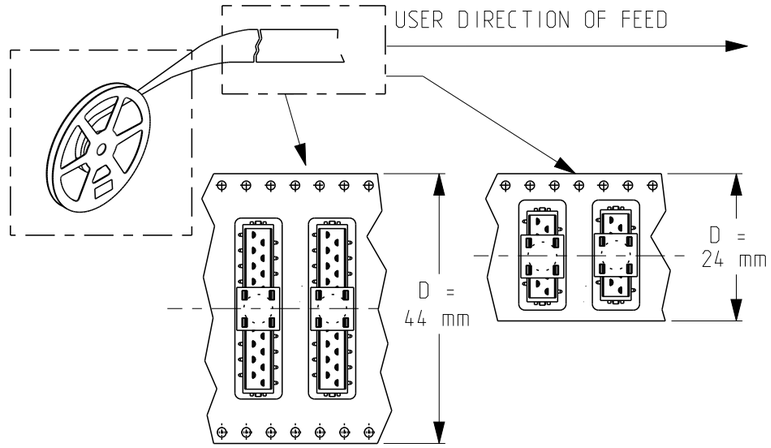

NOTES:

1 PACKAGING ACCORDING EIA-481/DIN IEC 286, REEL Ø380 mm

2 3 -5 µm TIN OVER 0.5 µm NICKEL PLATING.

NUMBER OF POSITIONS N	PN -WITHOUT VACUUM PICK AND PLACE FEATURE	PN -WITH VACUUM PICK AND PLACE FEATURE	"A"	"B"	"C"	TAPE WIDTH "D"	"E"
20	2-338728-0	9-338728-0	24.1	28.6	27.5	44	10.2
18	1-338728-8	8-338728-8	21.6	26.1	24.9	44	8.9
16	1-338728-6	8-338728-6	19.0	23.5	22.4	44	7.7
14	1-338728-4	8-338728-4	16.5	21.0	19.9	44	6.4
12	1-338728-2	8-338728-2	14.0	18.5	17.3	44	5.1
10	1-338728-0	8-338728-0	11.4	15.9	14.8	24	3.9
8	338728-8	7-338728-8	8.9	13.4	12.2	24	2.6
6	338728-6	7-338728-6	6.4	10.8	9.7	24	1.3
4	338728-4	7-338728-4	3.8	8.3	7.2	24	0.1

RECOMMENDED PCB LAY-OUT
TOP VIEW

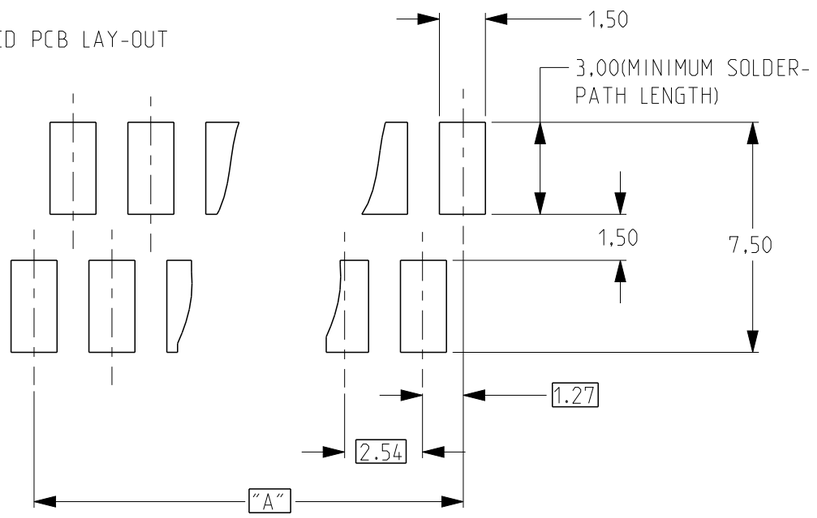

Item no	Description	Material	Finish
3	PICK AND PLACE FEATURE	PA 4.6, 30% GF, COLOR GREY	
2	CONTACT	TIN BRASS	2
1	HOUSING	Pa 4.6, 30% GF, COLOR: RED	

THIS DRAWING IS A CONTROLLED DOCUMENT.

DIMENSIONS: mm

TOLERANCES UNLESS OTHERWISE SPECIFIED:
0 PLC ±0.2
1 PLC ±0.1
2 PLC ±0.05
3 PLC ±0.01
4 PLC ±-
ANGLES ±-°-"

MATERIAL SEE TABLE
FINISH SEE TABLE

DWN M.Gosselink -
CHK -
APVD -
PRODUCT SPEC 108-19052
APPLICATION SPEC 114-13318
WEIGHT -

TE Connectivity

NAME Micro-MaTch Male On Board SMD connector

SIZE A3 | CAGE CODE 00779 | DRAWING NO C-338728 | RESTRICTED TO -

CUSTOMER DRAWING | SCALE 5:1 | SHEET 1 OF 1 | REV H

1470-19 (3/11)

Mouser Electronics

Authorized Distributor

Click to View Pricing, Inventory, Delivery & Lifecycle Information:

TE Connectivity:

7-338728-4