| SYMBOL DEFINITION | | | MISSING SYMBOLS |
|---|---|---|---|
| A DIMENSION WITHOUT AN INSPECTION REPORT SYMBOL ( ) DOES NOT REQUIRE INSPECTION. IT MAY BE CONTROLLED ON THE INDIVIDUAL COMPONENT DRAWING. | TOTAL NO OF INSPECTIONS REQUIRED | 43 | NO MISSING SYMBOL NUMBER |
| | LAST NO. USED | 39 | |

| DWG STATUS | | | | | ZONE | REVISION HISTORY | AUTH | DR | APVD 1 | APVD 2 |
|---|---|---|---|---|---|---|---|---|---|---|
| DATE | STG | REV | N/P | CHG | | | | | | |
| 01MY06 | R | F1 | - | - | | CLEARED REV COL, REDRAWN TO PD AND UPDATED MATING BLADE INFO | 279456 | EFS | JVM | WTM |

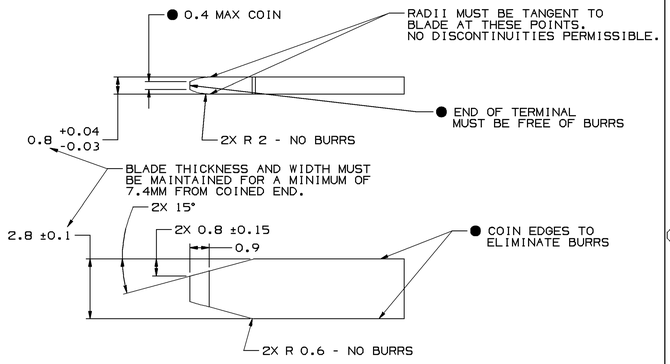


● THESE DIMENSIONS ARE CRITICAL TO THE MECHANICAL AND ELECTRICAL PERFORMANCE OF THE CONNECTION SYSTEM.

## MATERIAL SPECIFICATIONS

RECOMMENDED

BASE METAL - CDA-210, EXTRA SPRING TEMPER

* TIN PLATING (WHERE APPLICABLE TO 125°C MAX CONTINUOUS USAGE): 0.0050±0.0025 MM (200±100 μIN) ELECTROPLATED TIN.
* USAGE OF PLATING TYPES OTHER THAN RECOMMENDED MUST BE APPROVED BY DELPHI PACKARD ELECTRIC SYSTEMS ENGINEERING.

MINIMUMS

ELECTRICAL CONDUCTIVITY - ≥ 28% IACS AT 20°C. USE OF A MATERIAL WITH CONDUCTIVITY < 28% IACS MUST BE APPROVED BY PACKARD ELECTRIC MATERIALS ENGINEERING.

TENSILE STRENGTH - 420 - 475 MPa

UNDERPLATING FOR TIN PLATING - FOR BASE MATERIALS CONTAINING 10% OR MORE ZINC, AN UNDERPLATE OF COPPER 0.0025 MM (100 μIN) MINIMUM THICK IS REQUIRED.

PROCESSING LUBRICANT - ANY PROCESSING LUBRICANT REMAINING ON TERMINALS MUST NOT VARNISH OR DEGRADE THE ELECTRICAL PERFORMANCE OF THE CONNECTION UP TO A MAXIMUM TEMPERATURE OF 150°C. PROCESSING LUBRICANTS MUST BE APPROVED BY DELPHI PACKARD ELECTRIC SYSTEMS ENGINEERING.

## MATING BLADE INFORMATION

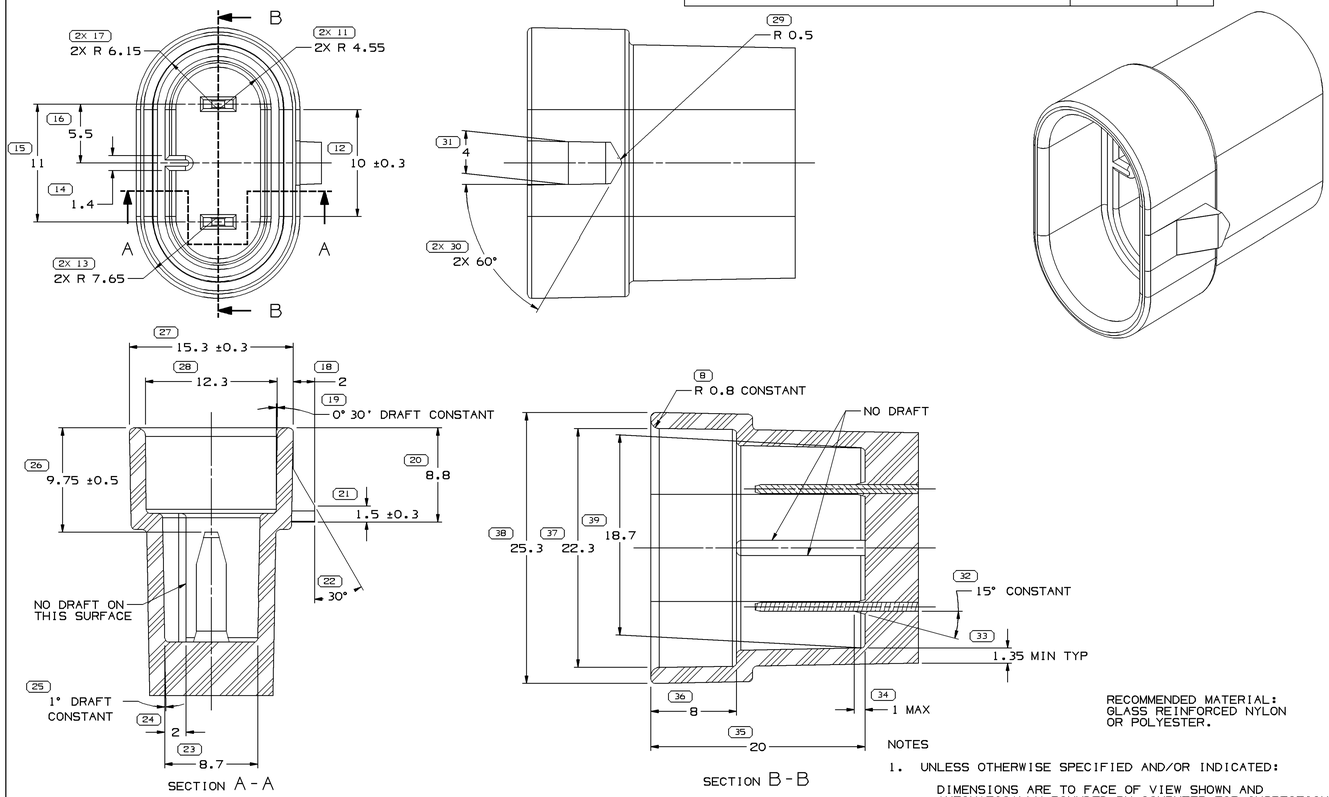


RECOMMENDED MATERIAL:
GLASS REINFORCED NYLON
OR POLYESTER.

NOTES

1. UNLESS OTHERWISE SPECIFIED AND/OR INDICATED:

   DIMENSIONS ARE TO FACE OF VIEW SHOWN AND AUTOMATICALLY ROUNDED BY COMPUTER FOR INSPECTION (SEE MATH MODEL FOR PRECISE DIMENSIONS). FOR ALL OTHER DIMENSIONS NOT SHOWN BUT REQUIRED FOR TOOL BUILD, SEE MATH MODEL FOR PRECISE TOOL PATH DATA.
   ALL RADII 0.4
   DRAFT IS 1° MAX ON ALL OUTSIDE SURFACES.
   LOCKING FEATURES ARE IDENTICAL.

2. SEALING SURFACES MUST BE FREE OF DEFECTS AND PARTING LINES.

MATING CONNECTOR INFORMATION

INSPECTION SYMBOLS SHOWN IN THESE VIEWS ARE FOR REFERENCE ONLY

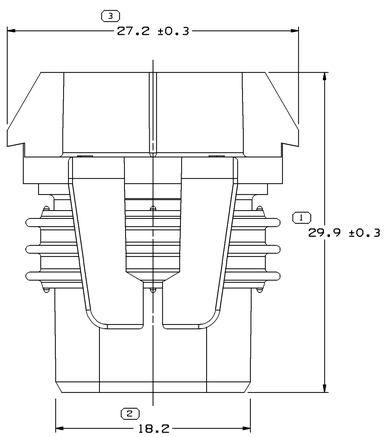


NOTES

1. UNLESS OTHERWISE SPECIFIED AND/OR INDICATED:

   DIMENSIONS ARE TO FACE OF VIEW SHOWN AND AUTOMATICALLY ROUNDED BY COMPUTER FOR INSPECTION (SEE MATH MODEL FOR PRECISE DIMENSIONS). FOR ALL OTHER DIMENSIONS NOT SHOWN BUT REQUIRED FOR TOOL BUILD, SEE MATH MODEL FOR PRECISE TOOL PATH DATA.

2. WHEN PARTS ARE SHIPPED, THEY MUST BE PACKED IN PLASTIC BAGS OR SHIPPING CONTAINERS MUST BE LINED WITH PLASTIC LINERS. BAGS OR LINERS MUST BE SEALED TO AVOID ENTRY OF FOREIGN MATTER.

3. SEALING CODE 3 - DESIGN WILL PASS SALT FOG AND IMMERSION TEST AFTER CONDITIONING AS SPECIFIED IN ESA-644 (WEATHER-PACK), ESA-710 (METRI-PACK), ESA-650 (UNDERHOOD MICRO-PACK), C-4006 (WORLD CONNECTOR), ETC. - WHEN MATED TO MATING PART OR EQUIVALENT

4. THIS PART IS NOT CONTROLLED FOR AUTOMATIC FEEDING.

5. REFERENCE MATING COMPONENTS OR EQUIVALENT:

   MATES TO HALOGEN HEAD LAMP BULB 9006-LOW BEAM.

6. THIS PART ACCEPTS THE FOLLOWING COMPONENTS OR EQUIVALENT:

   CAVITIES TO ACCEPT 12077411 TERMINAL OR EQUIVALENT.
   SECONDARY TERMINAL LOCK 12059185
   CABLE SEAL 12015323

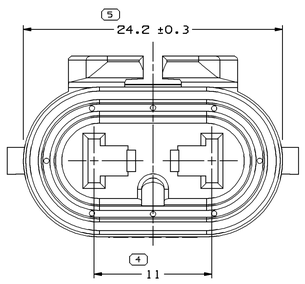


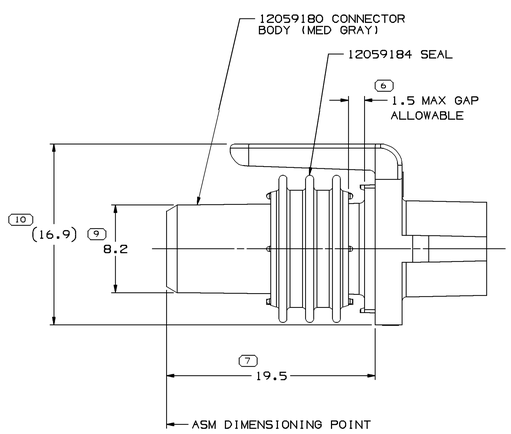


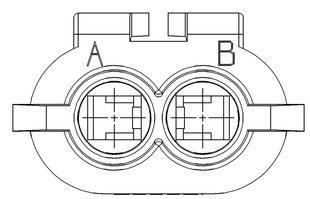


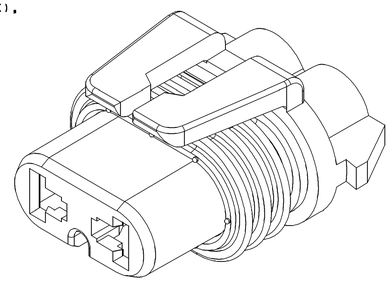

| DIMENSIONAL RANGE (MM) | | | | | | | | | | |
|---|---|---|---|---|---|---|---|---|---|---|
| FROM | > 0 | > 20 | > 30 | > 70 | >100 | >150 | >200 | >250 | >300 | |
| TO | 20 | 30 | 70 | 100 | 150 | 200 | 250 | 300 | 400 | |
| TOLERANCE UNLESS OTHERWISE SPECIFIED | | | | | | | | | | |
| ±0.15 | ±0.2 | ±0.3 | ±0.4 | ±0.5 | ±0.6 | ±0.8 | ±1 | ±1.2 | | |
| ANGULAR TOLERANCE ±2° | | | | | | | | | | |

(N/A) PROCESS SENSITIVE DIMENSION

DIMENSIONS ENCLOSED IN ( ) INDICATE REFERENCE DIMENSIONS AND NO TOLERANCE LIMITS ARE ESTABLISHED

THIRD ANGLE PROJECTION

DO NOT SCALE
USE MATH DATA

DWG TYPE: PART DRAWING

STYLE

VOLUME (CU³)

DISTR CODE

UNLESS OTHERWISE SPECIFIED

THIS DOCUMENT IS IN ACCORDANCE WITH ASME Y14.5M-1994 AS AMENDED BY THE GM GLOBAL DIMENSIONING AND TOLERANCING ADDENDUM-2001. SEPARATE PATTERNS OF FEATURES MAY BE DAMED SEPARATELY REGARDLESS OF DATUM REFERENCES.

ALL DIMENSIONS ARE IN MILLIMETERS

REFERENCE

DELPHI

DELPHI PACKARD ELECTRIC SYSTEMS
WARREN, OH

| | | DATE |
|---|---|---|
| DR | | |
| APVD1 | YERR L. BOZIS | 21MY85 |
| APVD2 | A. SWARTZ | 11JN85 |
| APVD3 | P. REEDY | 14JN85 |
| APVD4 | | |
| APVD5 | | |

SUBSTANCES OF CONCERN AND RECYCLED CONTENT PER DELPHI 10949001

MATERIAL: SEE DRAWING

DRAWING NAME: ASM CONN 2 F M/P 280 GRA MD SLD

DRAWING NUMBER: 12059181

| SIZE | SCALE | FRAME NO | SHEET NO | STG | REV | N/P |
|---|---|---|---|---|---|---|
| A0 | 5:1 | 1 OF 1 | 1 OF 1 | R | F1 | - |

Part: 12059181-CU501-S01 Date: 29-Jun-06 Time: 15:26
Dwg: 12059181-CU501-S01
Messages:

# Mouser Electronics

Authorized Distributor

Click to View Pricing, Inventory, Delivery & Lifecycle Information:

Aptiv:
12059181