DO NOT SCALE

PART NO. 1214 6132

ZONE	DATE	SYM	REVISION RECORD	AUTHORITY	DR	CK
	07MR07	D1	CREATED PART DRAWING	400743	JTZ	FRC

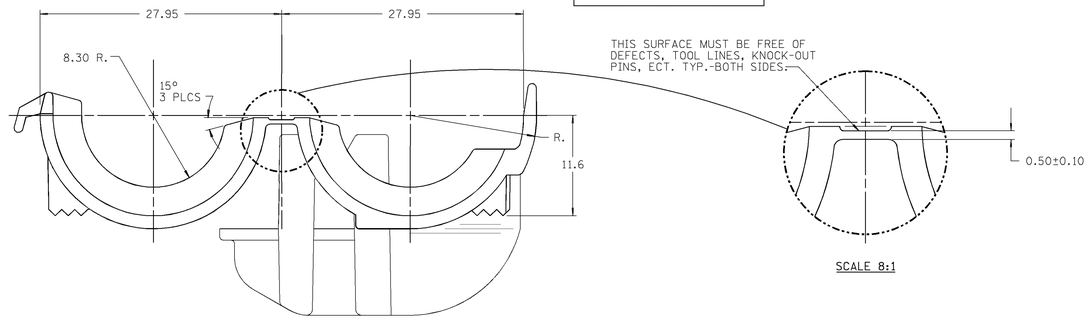

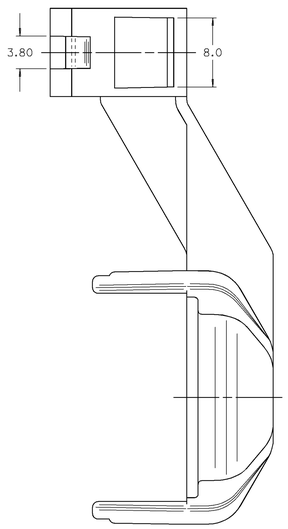

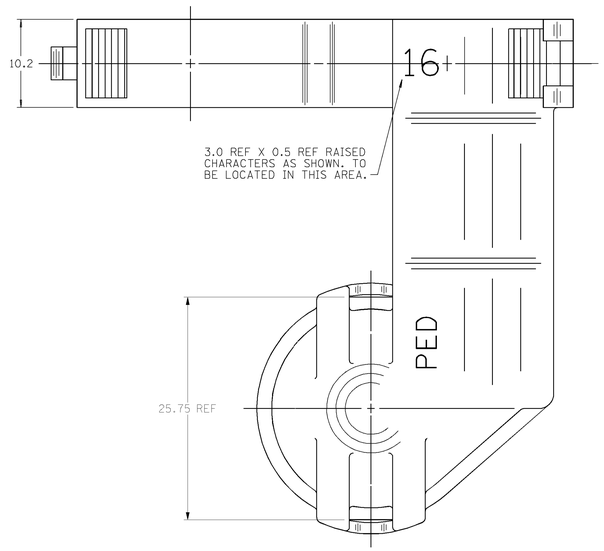

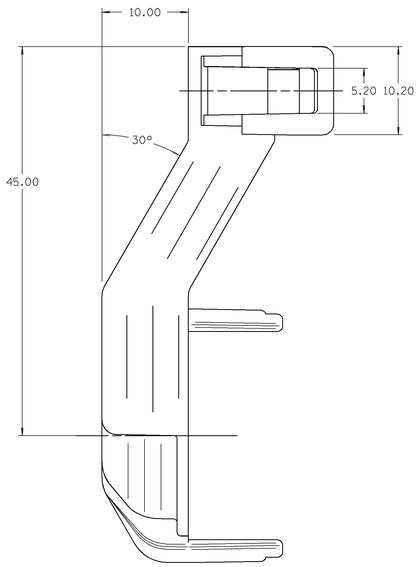

PART NO. 1214 6132

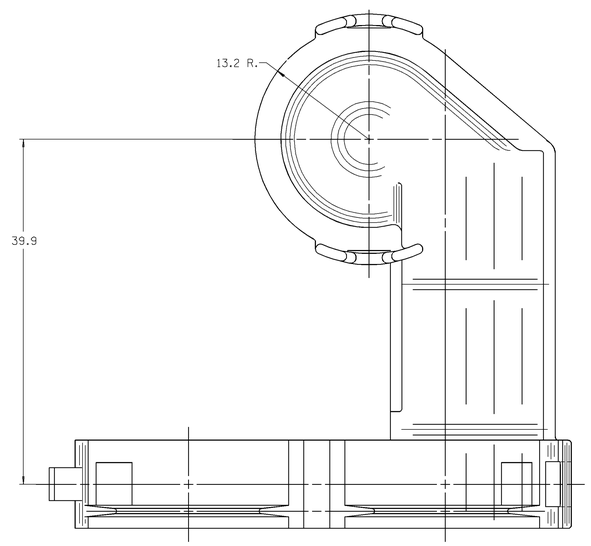

PART NO. 1214 6132

NOTES — 1. UNLESS OTHERWISE SPECIFIED AND/OR INDICATED:

DIMENSIONS ARE TO FACE OF VIEW SHOWN AND AUTOMATICALLY ROUNDED BY COMPUTER FOR INSPECTION (SEE MATH MODEL FOR PRECISE DIMENSIONS). FOR ALL OTHER DIMENSIONS NOT SHOWN BUT REQUIRED FOR TOOL BUILD, SEE MATH MODEL FOR PRECISE TOOL PATH DATA.

2. MATING CONNECTORS 12110721, 12110727, OR EQUIVALENT.
3. THIS PART ACCEPTS 16MM CONVOLUTED CONDUIT.
4. THIS PART IS SYMETRICAL ABOUT CENTERLINE, EXCEPT AS SHOWN.
5. SEALING CODE O.
6. THIS PART IS NOT CONTROLLED FOR AUTOMATIC FEEDING.
7. MATERIAL RECYCLING CODE PER ISO 11469. (2.3)X(0.1) CHARACTERS AS SHOWN TO BE LOCATED ON ANY EXTERIOR SURFACE. OPTIONAL CONSTRUCTION TO BE NO MATERIAL RECYCLING CODE.
8. (2.3)X(0.1) DELPHI CORPORATE BRAND TO BE LOCATED ON ANY EXTERIOR SURFACE, PREFERABLY VISIBLE AT FINAL ASSEMBLY. OPTIONAL CONSTRUCTION FOR EXISTING TOOLING MAY BE "PED".

PED/INTERGRAPH EMS

FILE SPEC: @@@@USER@@@@ DGN@SPECIFICATION@@@@@@@@@@@@ @@@@@SYTIME@@@@@@

THIRD ANGLE PROJECTION

METRIC
DIMENSIONS ARE IN MILLIMETERS UNLESS OTHERWISE SPECIFIED.

CODE NO. 6900

TOLERANCE UNLESS OTHERWISE SPECIFIED
DECIMALS: ONE PLACE ± 0.3, TWO PLACE ± 0.15
ANGULAR ± 2°

Q.C.-C-4004

DWG. DATE 022891	SCALE 4:1	DR. PABLO TRONCOSO	DATE 11APO7
EST. NO.		CK. FCO. RESENDIZ	DATE 12APO7
REFERENCE NO.		APPR. LAURA RODRIGUEZ	DATE 16APO7
		APPR.	DATE

MATERIAL SPEC. M3592001 PA66 HS IM BLK

NAME CLIP CONDUIT

PART NO. 1214 6132

SIZE E

PACKARD ELECTRIC DIVISION
GENERAL MOTORS CORPORATION
WARREN, OHIO

PACKARD ELECTRIC
SEIBASI
3CA

Mouser Electronics

Authorized Distributor

Click to View Pricing, Inventory, Delivery & Lifecycle Information:

Aptiv:
12146132