SYMBOL DEFINITION		
A DIMENSION WITHOUT AN INSPECTION REPORT SYMBOL ( ) DOES NOT REQUIRE INSPECTION. IT MAY BE CONTROLLED ON THE INDIVIDUAL COMPONENT DRAWING.	TOTAL NO OF INSPECTIONS REQUIRED	17
	LAST NO. USED	17

MISSING SYMBOLS
NO MISSING SYMBOL NUMBER

DWG STATUS DATE	STS	REV	N/P	CHG	ZONE	REVISION HISTORY	AUTH	DR	APVD 1	APVD 2
09JN03	R	01	-	-		ALL PARTS - RELEASED	241567	AMG	AMG	RF
24OC03	R	02	-	-		ADDED P/N 15326426, 15326427, & 15326427 TO CHART, OBSOLETED FOR P/N 15471367, 15471368, & 15471369. UPDATED BLANK VIEW	246088	LMB	LMB	RF
30MR04	R	03	-	-		15326426 - UPDATED PDM ATTRIBUTES	253027	MJM	MJM	LN
16AU04	R	04	-	-		ADDED TERMINAL I.D. NOTE; REMOVED "PXX" FROM GRAPHICS	258116	TSH	TSH	RF
11AP05	R	05	-	-		ALL ACTIVE PARTS - ADDED CABLE ID COLUMN TO CHART, ADDED NOTE #4	265764	DAD	DAD	RMF
16MY05	R	06	-	-		ALL ACTIVE PARTS - ADDED 2 COLUMNS TO CHART AND REMOVED MATING COMPONENTS NOTE ;15326426 - TYP CABLE SEAL WAS 12191226; ;15326427 - TYP CABLE SEAL WAS 12191227; ;15326428 - TYP CABLE SEAL WAS 12191229	268254	RH	RH	LN
21MR06	R	07	-	-		15326428 - UPDATED PDM ATTRIBUTES	278780	JBD	AUG	EJH
30MY06	R	08	-	-		ALL ACTIVE PARTS-UPDATED PDM ATTRIBUTES	281105	TLD	TLD	MJC
17AU07	R	09	-	-		ALL PARTS - MAT'L SIZE COLUMN REMOVED FROM CHART ; 13660125 - RELEASED	402047	EAJ	JVM	JAV
03DE07	R	10	-	-		13660125 - MATERIAL SPEC WAS M3666CN7	403115	RH	RH	RWR
07OC08	R	11	-	-		13722264 & 13722266 - WAS ON SHT "1"	406319	ACG	FKV	EJB
20OC08	R	12	-	-		13722264 & 13722266 - UPDATED MAT'L SPEC	406468	LVR	FKV	EJB
06NO08	R	13	-	-		ALL ACTIVE PARTS - UPDATED MAT'L CALL OUT	406685	RHG	JHP	RHG
25FE09	R	14	-	-		13722264 & 13722266 - WERE TYPE 501 AND REVISED TERMINAL FRONT BOX LABEL	407450	EFS	FKV	GER
17NO09	R	15	-	-		13794882 AND 13794883 - RELEASED	409486	JAR	JAR	GER
25FE10	R	16	-	-		13794882 & 13794883 - UPDATED MAT'L CALL OUT	410082	MAL	MAL	PGD
19MR10	R	17	-	-		ALL ACTIVE PARTS - UPDATED PDM ATTRIBUTES	410249	FRE	FRE	VMR
24MR10	R	18	-	-		ALL ACTIVE PARTS - ADDED TYP CABLE SEAL & TYP SEALING CAVITY TO CHART AND 13660125 - UPDATED MAT'L CALL OUT	410401	HRS	HRS	VMR
16AU10	R	19	-	-		ALL ACTIVE PARTS - UPDATED MAT'L DESC, ADDED "CONTAC TYPE" COLUMN, "CRIMP TYPE" COLUMN & "PLATING TYPE" NOTE	411637	HRS	HRS	VMR
24AU10	R	20	-	-		ALL ACTIVE PARTS - UPDATED PDM ATTRIBUTES	411755	HRS	HRS	VMR
30SE10	R	21	-	-		ALL ACTIVE PARTS - UPDATED PLATING NOTE	412114	AJP	JVM	VMR
23MY11	R	22	-	-		ALL ACTIVE PARTS - ADDED "MAT'L SIZE" COLUMNS	414345	JAR	JAR	VMR
15OC14	R	23	-	-		13722264, 13722266 & 13794882-83 - REVISED NOTE V ABOUT "TARNISH INFO" IN PLATING TYPE NOTE	427927	ABH	JVM	JSM

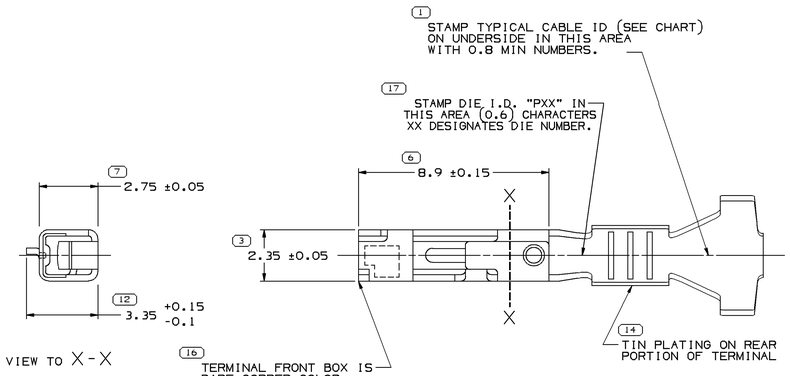

VIEW TO X-X

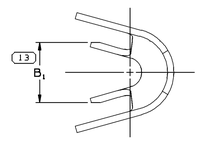

VIEW TO X-X

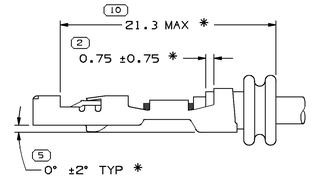

TWO RIB SEAL POSITION
AND TERMINAL/CABLE ALIGNMENT

SCALE 5:1

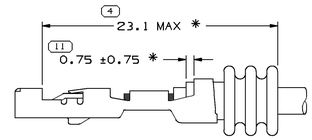

THREE RIB SEAL POSITION

SCALE 5:1

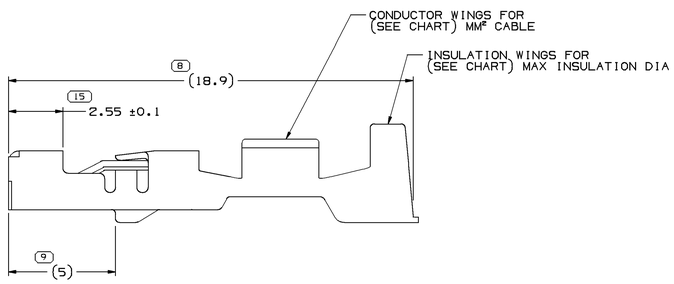

NOTES

1. UNLESS OTHERWISE SPECIFIED AND/OR INDICATED:

   DIMENSIONS ARE TO FACE OF VIEW SHOWN AND AUTOMATICALLY ROUNDED BY COMPUTER FOR INSPECTION. (SEE MATH MODEL FOR PRECISE DIMENSIONS.) FOR ALL OTHER DIMENSIONS NOT SHOWN BUT REQUIRED FOR TOOL BUILD, SEE MATH MODEL FOR PRECISE TOOL PATH DATA.

2. MATING TERMINAL MUST HAVE A PRECIOUS METAL (GOLD OR SILVER) CONTACT INTERFACE.

3. * DENOTES DIMENSIONS MADE AT CUT-OFF AND CRIMP DIE.

4. DO NOT PROBE, TEST OR OTHERWISE CONTACT THE INTERIOR REGION (THE SPRING OR ANY MOVING PART) OF THIS TERMINAL. SEVERE DAMAGE CAN OCCUR, COMPROMISING THE PERFORMANCE OF THE ELECTRICAL INTERFACE.

5. PLATING TYPE:

   I. MATE TIN ELECTROPLATE 1.9 - 7.0 MICROMETERS THICK WITH A NICKEL UNDERPLATE 0.13 - 0.25 MICROMETERS THICK.

   II. REFLOW TIN 1.9 - 3.3 MICROMETER THICK WITH A COPPER UNDERPLATE 0.5 MICROMETER TO 1.0 MICROMETER THICK.

   III. MATE TIN ELECTROPLATE 1.9 - 7.0 MICROMETERS THICK.

   IV. 1.27 MICROMETERS DIFFUSED GOLD PALLADIUM/SILVER ALLOY INLAY OVER 1.27 MICROMETERS THICK NICKEL UNDERLAY.

   V. SILVER 3.5 - 6.0 MICROMETERS THICK OVER 0.13 - 0.25 MICROMETERS THICK NICKEL UNDERPLATE.

   ◯ FOR TERMINALS PACKAGED & STORED IN THE APPROVED MANNER, TARNISH ON SILVER PLATED SURFACES WILL NOT AFFECT THE PERFORMANCE OF THE PART.

   PLATING TYPE INFORMATION SHOWN ABOVE IS REFERENCE ONLY, PLATING REQUIREMENTS ARE CONTAINED IN APPLICABLE MATERIAL SPECIFICATION.

PART NO	REV	N/P	PREFERRED MAT'L SIZE	ALTERNATIVE MAT'L SIZE	MAT'L DESCRIPTION	SIZE (MM²)	TYPICAL CABLE AWG	ID	DIA	TYPE	$B_1 \pm 0.2$	APPLICATION	TYPICAL CABLE SEAL OR EQUIVALENT	TYPICAL SEALING CAVITY CONFIG.	CONTACT AREA PLATING TYPE (SEE NOTE 5)	CRIMP AREA PLATING TYPE (SEE NOTE 5)
13794883	01	AH	0.3 X 26.71	0.3 X 27.38	BERYLLIUM COPPER ALLOY	0.75 - 0.8	18	18	2.02 - 1.7	502	2.65	SEALED (MINI)	15305351	3.2 X 4 OVAL	V	I
13794882	01	AH	0.3 X 26.71	0.3 X 27.38	BERYLLIUM COPPER ALLOY	0.35 - 0.5	20 OR 22	21	1.85 - 1.2	502	2.1	SEALED (MINI)	15366022	3.2 X 4 OVAL	V	I
13722266	01	AK	0.3 X 26.71	0.3 X 27.38	BERYLLIUM COPPER ALLOY	0.35 - 0.5	20 OR 22	21	1.85 - 1.2	502	2.1	SEALED (GT)	15366021	Ø 4 ROUND	V	I
13722264	01	AK	0.3 X 26.71	0.3 X 27.38	BERYLLIUM COPPER ALLOY	0.75 - 1	16 OR 18	17	2.25 - 1.7	502	2.65	SEALED (GT)	15366060	Ø 4 ROUND	V	I
13660125	01	AH	0.3 X 26.71	0.3 X 27.38	BERYLLIUM COPPER ALLOY	0.75 - 0.8	18	18	2.02 - 1.7	501	2.65	SEALED (MINI)	15305351	3.2 X 4 OVAL	II	II
15326428	04	AL	0.3 X 26.71	0.3 X 27.38	BERYLLIUM COPPER ALLOY	0.35 - 0.5	20 OR 22	21	1.85 - 1.2	501	2.1	SEALED (MINI)	15366022	3.2 X 4 OVAL	IV	III
15326427	04	AK	0.3 X 26.71	0.3 X 27.38	BERYLLIUM COPPER ALLOY	0.75 - 1	16 OR 18	17	2.25 - 1.7	501	2.65	SEALED (GT)	15366060	Ø 4 ROUND	IV	III
15326426	04	AL	0.3 X 26.71	0.3 X 27.38	BERYLLIUM COPPER ALLOY	0.35 - 0.5	20 OR 22	21	1.85 - 1.2	501	2.1	SEALED (GT)	15366021	Ø 4 ROUND	IV	III
~~15471368~~	01	-	0.3 X 26.71	0.3 X 27.38	BERYLLIUM COPPER ALLOY	0.75 - 1	16 OR 18	17	2.25 - 1.7	501	2.65	SEALED (GT)	12191227	Ø 4 ROUND	-	-
~~15471367~~	01	-	0.3 X 26.71	0.3 X 27.38	BERYLLIUM COPPER ALLOY	0.35 - 0.5	20 OR 22	21	1.85 - 1.2	501	2.1	SEALED (GT)	12191226	Ø 4 ROUND	-	-
15471370	02	AK	0.3 X 26.71	0.3 X 27.38	BERYLLIUM COPPER ALLOY	0.75 - 0.8	18	18	2.02 - 1.7	501	2.65	SEALED (MINI)	15305351	3.2 X 4 OVAL	IV	III
~~15471369~~	01	-	0.3 X 26.71	0.3 X 27.38	BERYLLIUM COPPER ALLOY	0.35 - 0.5	20 OR 22	21	1.85 - 1.2	501	2.1	SEALED (MINI)	12191229	3.2 X 4 OVAL	-	-

(13) PROCESS SENSITIVE DIMENSION

DIMENSIONS ENCLOSED IN ( ) INDICATE REFERENCE DIMENSIONS AND NO TOLERANCE LIMITS ARE ESTABLISHED

DIMENSIONAL RANGE (MM)		CHART D
FROM	0	> 12
TO	12	
TOLERANCE UNLESS OTHERWISE SPECIFIED	±0.1	±0.2
ANGULAR TOLERANCE ±2°		

A ⟍ LINE DRAWN THROUGH A PART NUMBER INDICATES THAT PHYSICAL PARTS ARE NOT AVAILABLE FOR ORDERING.

PART NUMBERS THAT DO NOT HAVE A LINE PRESENT INDICATE THAT PHYSICAL PARTS ARE AVAILABLE FOR ORDERING.

CONTACT DELPHI SALES TO ASSURE AVAILABILITY OF PARTS.

DWG TYPE: PART DRAWING

STYLE

VOLUME (CM³)

DISTR CODE

UNLESS OTHERWISE SPECIFIED

THIS DOCUMENT IS IN ACCORDANCE WITH ASME Y14.5M-1994 AS AMENDED BY ISO 8015:1985 GEOMETRIC DIMENSIONING AND TOLERANCING. ACCORDING TO ASME, REPEATED PATTERNS OF FEATURES MAY BE SHARED SEPARATELY REGARDLESS OF DATUM REFERENCES.

ALL DIMENSIONS ARE IN MILLIMETERS

REFERENCE

THIRD ANGLE PROJECTION

DO NOT SCALE

USE MATH DATA

NX

DELPHI

DELPHI PACKARD ELECTRICAL/ELECTRONIC ARCHITECTURE

WARREN, OH

COPYRIGHT 2003 DELPHI CORPORATION AND/OR ITS AFFILIATES. ALL RIGHTS RESERVED.
LAST MODIFIED 2004

THIS DRAWING IS THE PROPERTY OF DELPHI CORPORATION AND CONTAINS DELPHI CONFIDENTIAL INFORMATION. THE REPRODUCTION, DISTRIBUTION AND UTILIZATION OF THIS DOCUMENT OR ITS RELATED CAD MATH DATA, AS WELL AS COMMUNICATION OF ANY CONTENT TO OTHERS, WITHOUT EXPRESS AUTHORIZATION, IS PROHIBITED.

		DATE
DR		
APVD1	ANDRES MENDEZ	09JN03
APVD2	ANDRES MENDEZ	09JN03
APVD3	RICK FETCENKO	10JN03
APVD4		
APVD5		

SUBSTANCES OF CONCERN AND RECYCLED CONTENT PER DELPHI 10949001

MATERIAL: SEE CHART

DRAWING NAME: TAXI TERM F GT 150

DRAWING NUMBER: 12191815

SIZE	SCALE	FRAME NO	SHEET NO	STG	REV	N/P
A0	10:1	1 OF 1	5 OF	R	23	-

File: 12191815-CU201-005 Date: 25-Nov-14 Time: 11:43
User: 12191815 Message:

Mouser Electronics

Authorized Distributor

Click to View Pricing, Inventory, Delivery & Lifecycle Information:

Aptiv:
15471370