Apr.1.2020 Copyright 2020 HIROSE ELECTRIC CO., LTD. All Rights Reserved.
In case of consideration for using Automotive equipment / device which demand high reliability, kindly contact our sales window correspondents.

COUNT	DESCRIPTION OF REVISIONS	BY	CHKD	DATE	COUNT	DESCRIPTION OF REVISIONS	BY	CHKD	DATE
				. .					. .
				. .					. .
				. .					. .

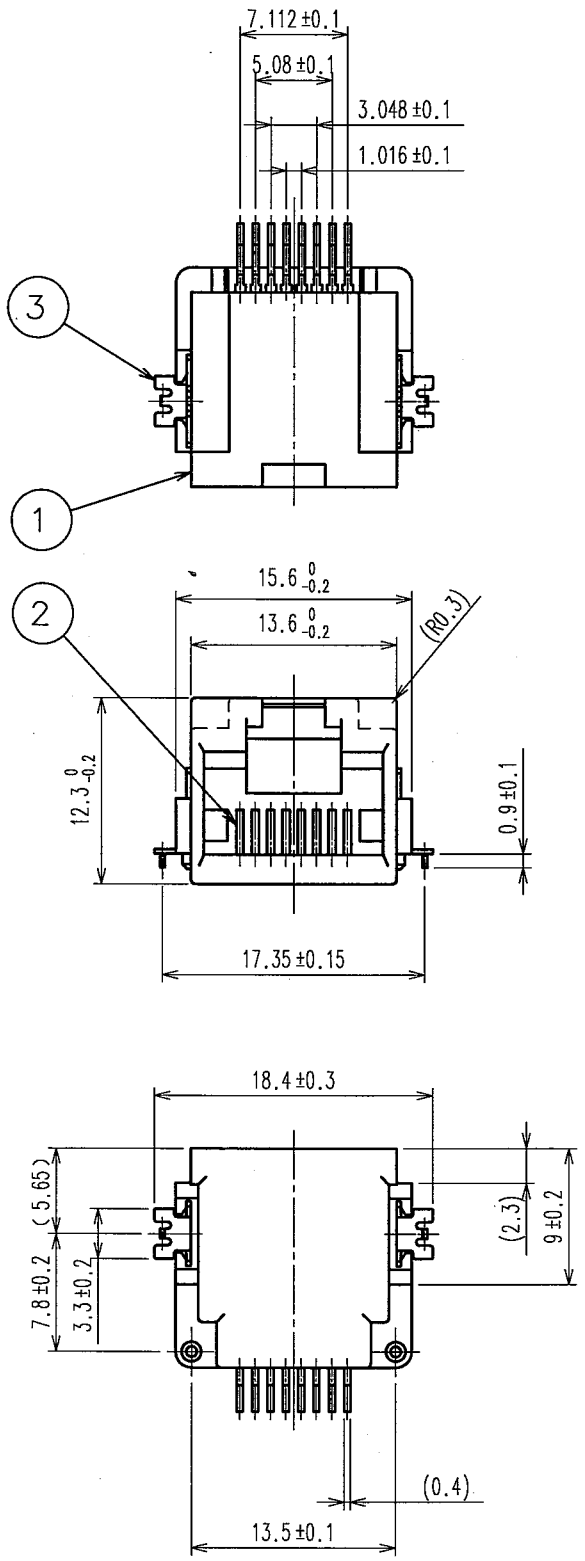

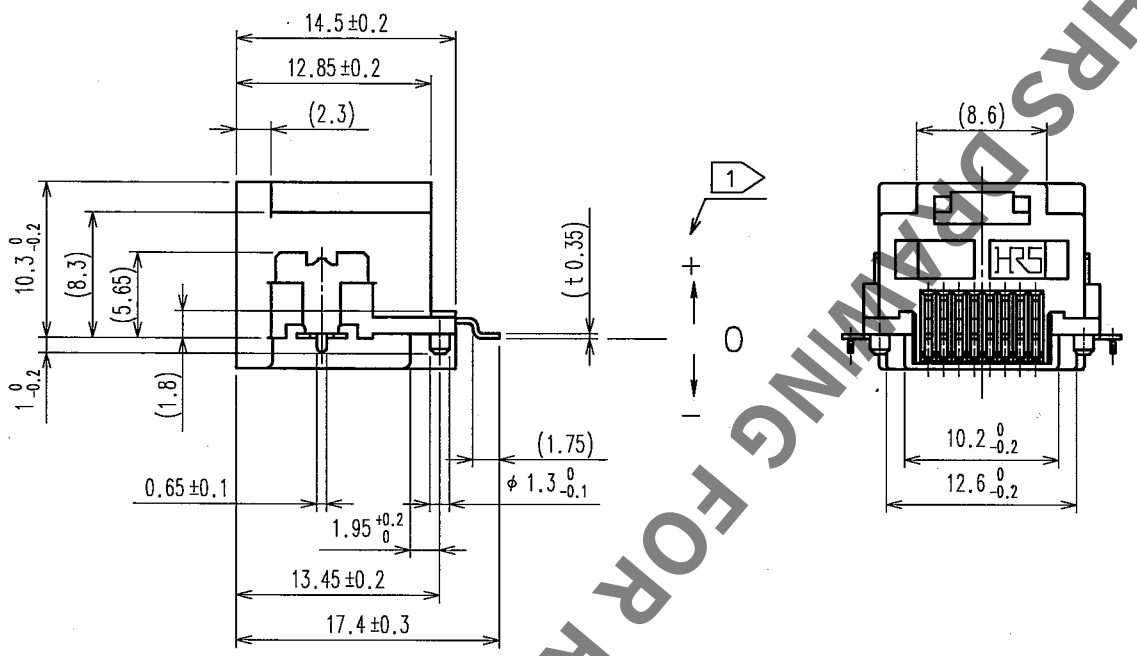

RECOMMENDED PCB PATTERN, MOUNTING SIDE(4:1)

t=1

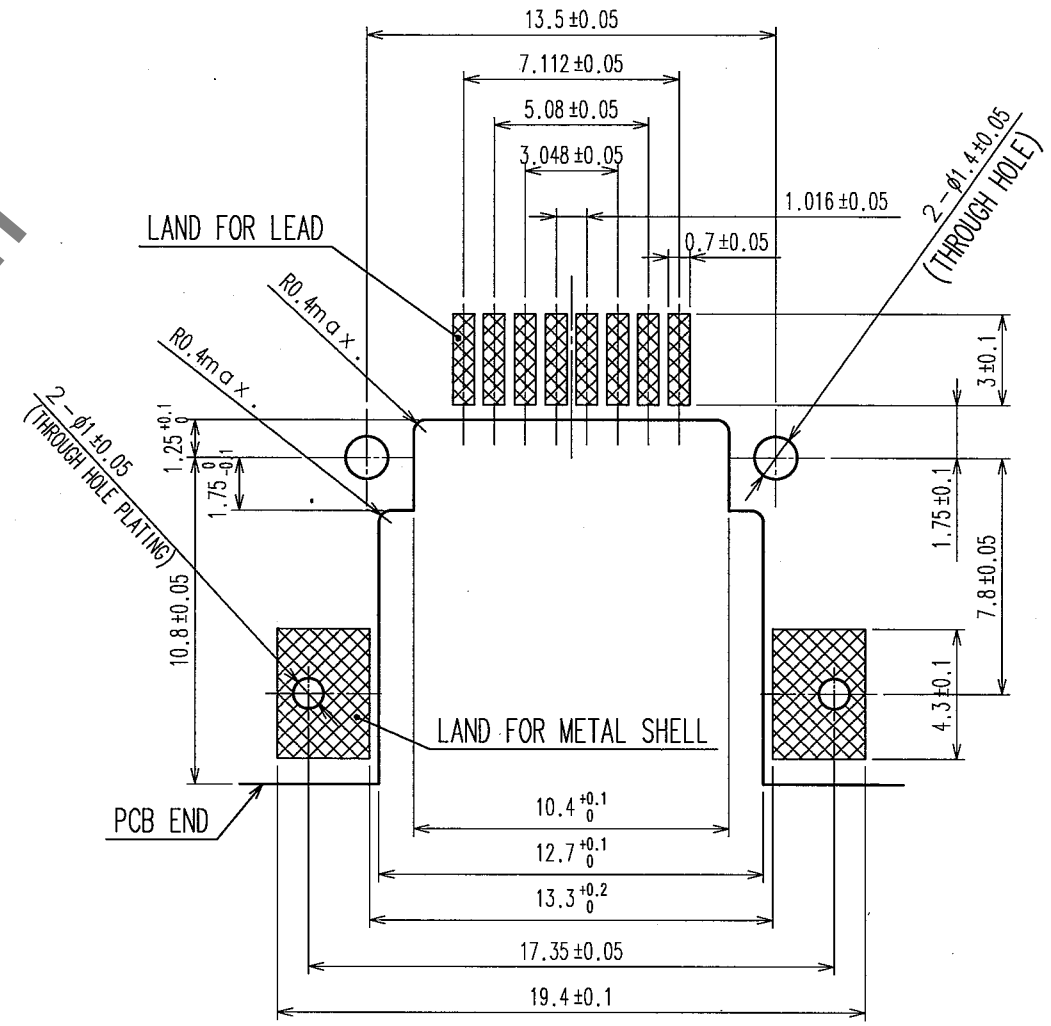

NOTE 1 THE CO-PLANARITY OF LEADS AND METAL SHELLS SHALL BE $0^{+0.05}_{-0.1}$.

SET MOUNTED EXAMPLE

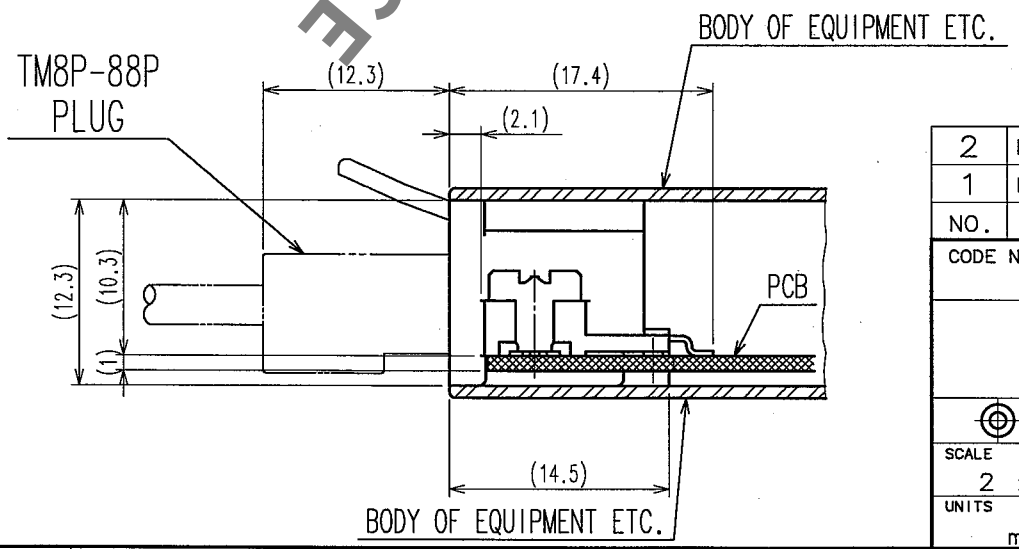

HRS DRAWING FOR REFERENCE

NO.	MATERIAL	FINISH, REMARKS	NO.	MATERIAL	FINISH, REMARKS
2	PHOSPHOR BRONZE	SELECTIVE GOLD PLATING 1.27μm			
1	PPS	(BLACK) UL94V-0	3	COPPER ALLOY	TIN PLATING 1μm

CODE NO.(OLD)	DRAWN	DESIGNED	CHECKED	APPROVED	RELEASED
	M. Itano '06·1·17	F. Inaguchi 06·1·17	Y. Enami 06·1·17	C. Miura '06·01·17	. .

SCALE 2 : 1	DRAWING NO. EDC3-122138-01	PART NO. TM18R-TO-88(50)
UNITS mm	HRS HIROSE ELECTRIC CO., LTD	CODE NO. CL222-2883-9-50 1/1

TO
Q1

FORM NO.2991