THIS DRAWING IS UNPUBLISHED. RELEASED FOR PUBLICATION -,- .
© COPYRIGHT 2011 BY TYCO ELECTRONICS CORPORATION. ALL RIGHTS RESERVED.

LOC	DIST
DW	—

REVISIONS

P	LTR	DESCRIPTION	DATE	DWN	APVD
	B	REVISED (ECR-12-008086) REVISED CAVITY DEPTH OF PACKAGE TO 7.0mm	02MAY'12	E.L.	W.K.

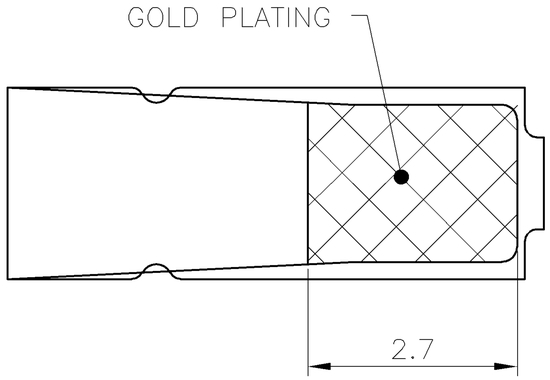

NOTES :

1. MATERIAL :
   COPPER ALLOY, 0.15±0.01MM THK
2. FINISH :
   GOLD FLASH PLATING ON THE CONTACT AREA.
   2.54um[100u"] MIN. MATTE-TIN PLATING ON THE FOOT AREA.
   1.27um[50u"] NICKEL UNDERPLATING OVERALL.
3. REFLOW SOLDER CAPABLE TO 260°C
   PER TE SPEC. 109-201, CONDITION B.

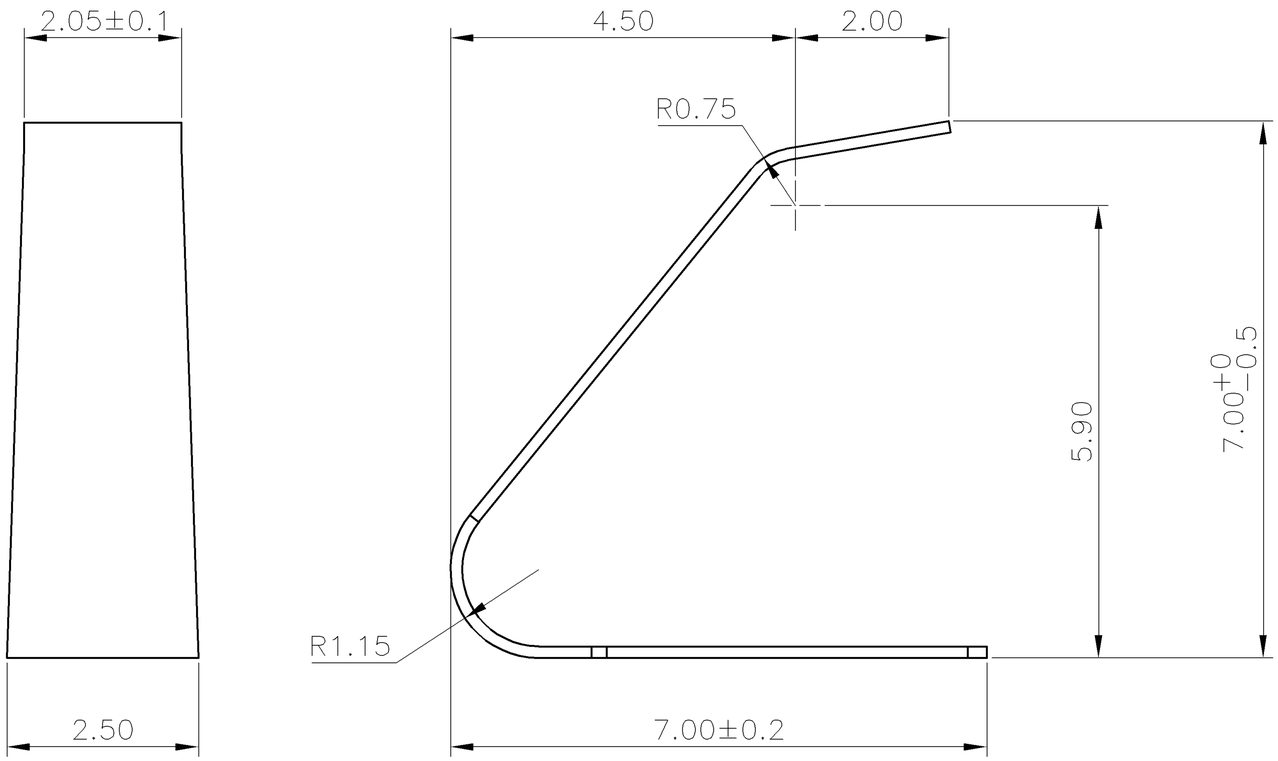

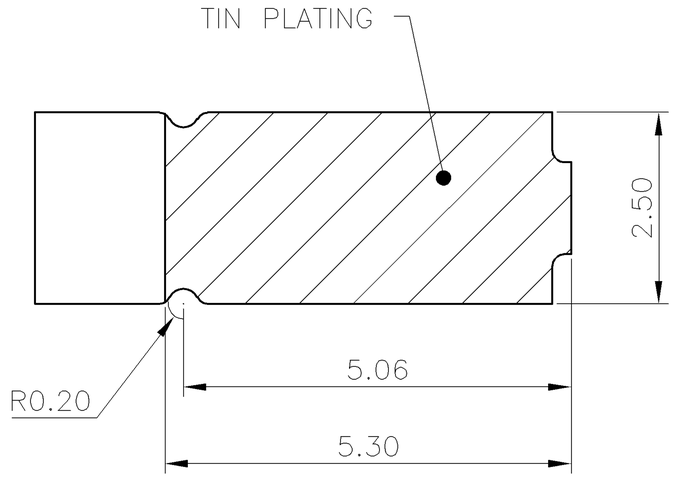

RECOMMENDED FOOT PRINT
REFERENCE ONLY

1734298-1
PART NUMBER

THIS DRAWING IS A CONTROLLED DOCUMENT.

DIMENSIONS: mm

TOLERANCES UNLESS OTHERWISE SPECIFIED:

0 PLC	± –
1 PLC	± 0.3
2 PLC	± 0.2
3 PLC	± 0.15
4 PLC	± –
ANGLES	± 3°

MATERIAL: SEE NOTE
FINISH: SEE NOTE

DWN E. LIU 24JUN2009
CHK S. CHIEN 24JUN2009
APVD W. KODAMA 24JUN2009
PRODUCT SPEC 108-57765
APPLICATION SPEC —
WEIGHT 0.0005 GRAMS

TE Connectivity

NAME: SHIELD FINGER 6525

SIZE	CAGE CODE	DRAWING NO	RESTRICTED TO
A3	00779	C-1734298	—

CUSTOMER DRAWING | SCALE — | SHEET 1 OF 2 | REV B

THIS DRAWING IS UNPUBLISHED. RELEASED FOR PUBLICATION -,- .
© COPYRIGHT 2011 BY TYCO ELECTRONICS CORPORATION. ALL RIGHTS RESERVED.

LOC	DIST
DW	—

REVISIONS

P	LTR	DESCRIPTION	DATE	DWN	APVD
		SEE SHEET 1.			

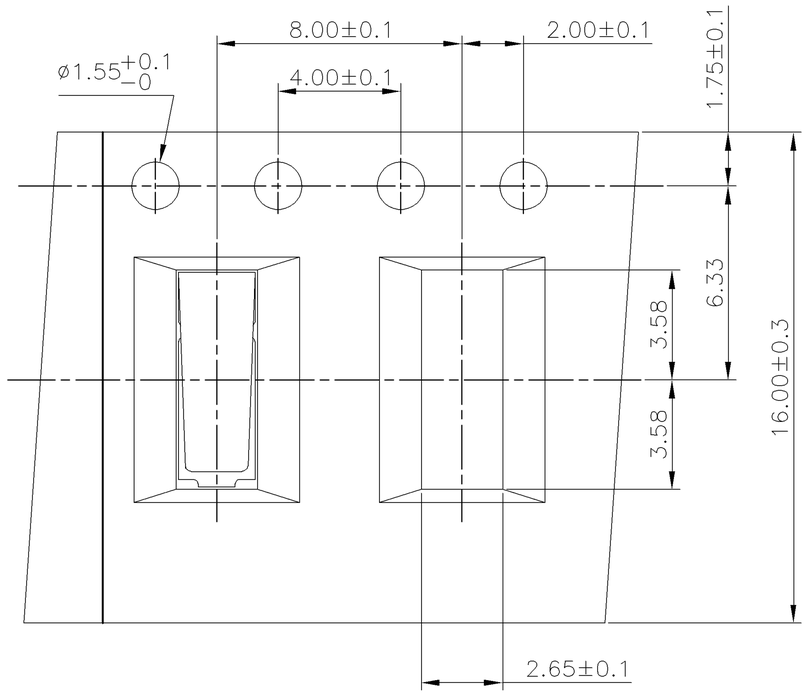

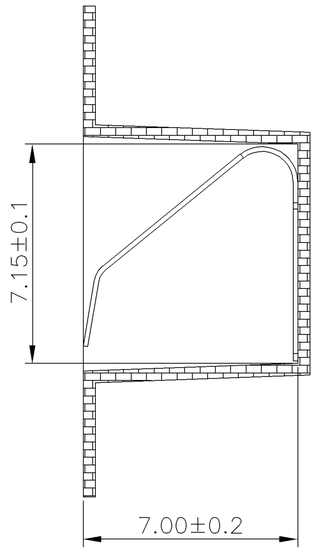

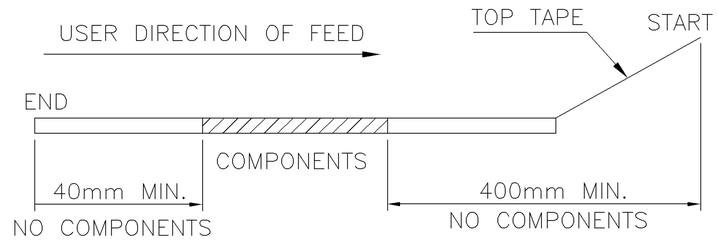

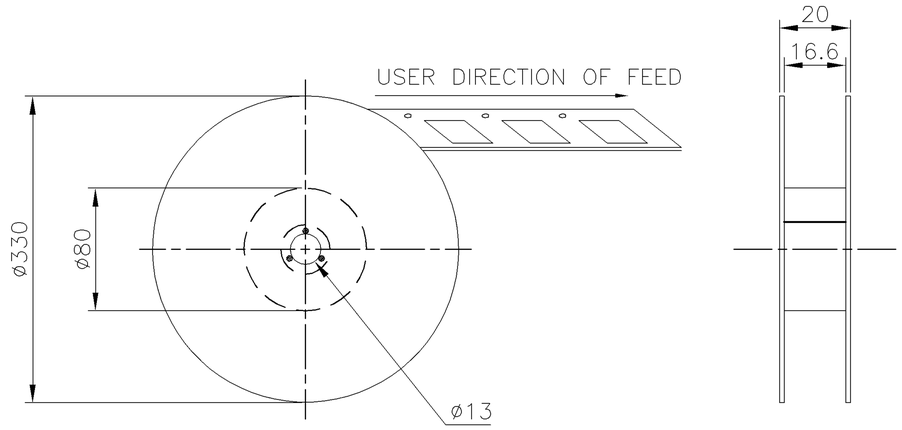

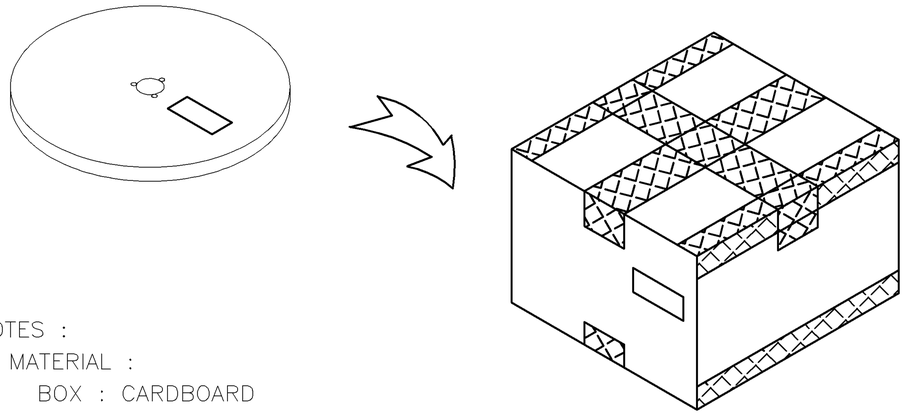

NOTES :
1. MATERIAL :
   BOX : CARDBOARD
   CARRIER TAPE : PS
   TOP TAPE : PET
   REEL : PS
2. DIMENSION :
   REEL : SEE DRAWING
   BOX : 345X345X240
3. QUANTITY : SEE TABLE
4. WEIGHT : SEE TABLE
5. PEELING RESISTANCE : 10g~70g
6. PEELING SPEED : 300mm/MINUTES

5.61Kg	0.062Kg	1200	10	12000 PCS
GROSS WEIGHT	NET WEIGHT	PCS/REEI	REEI /CARTON	QUANTITY

THIS DRAWING IS A CONTROLLED DOCUMENT.

DIMENSIONS: mm

TOLERANCES UNLESS OTHERWISE SPECIFIED:

0 PLC	± –
1 PLC	± 0.3
2 PLC	± 0.2
3 PLC	± 0.15
4 PLC	± –
ANGLES	± 3°

MATERIAL –

FINISH –

DWN –
CHK –
APVD –
PRODUCT SPEC –
APPLICATION SPEC –
WEIGHT –

TE Connectivity

NAME: SHIELD FINGER 6525

SIZE	CAGE CODE	DRAWING NO	RESTRICTED TO
A3	00779	C-1734298	—

CUSTOMER DRAWING | SCALE — | SHEET 2 OF 2 | REV B

Mouser Electronics

Authorized Distributor

Click to View Pricing, Inventory, Delivery & Lifecycle Information:

TE Connectivity:

1734298-1