SYMBOL DEFINITION		
A DIMENSION WITHOUT AN INSPECTION REPORT SYMBOL ( ) DOES NOT REQUIRE INSPECTION. IT MAY BE CONTROLLED ON THE INDIVIDUAL COMPONENT DRAWING.	TOTAL NO OF INSPECTIONS REQUIRED	38
	LAST NO. USED	20

MISSING SYMBOLS
NO MISSING SYMBOL NUMBER

DWG STATUS					ZONE	REVISION HISTORY	AUTH	DR	APVD 1	APVD 2
DATE	STG	REV	N/P	CHG						
29JL02	R	04	-	-		REDRAWN TO PD & MAT'L SPEC WAS R0064366	228504	RH	RCH	RC
10SE02	R	04	AA	-		4.75 +0.15/-0.35 WAS 4.75 +/-0.15	230162	RH	RCH	RC
12NO02	R	04	AB	-		REVISED LOCK GRAPHICS	233537	RH	RH	ET

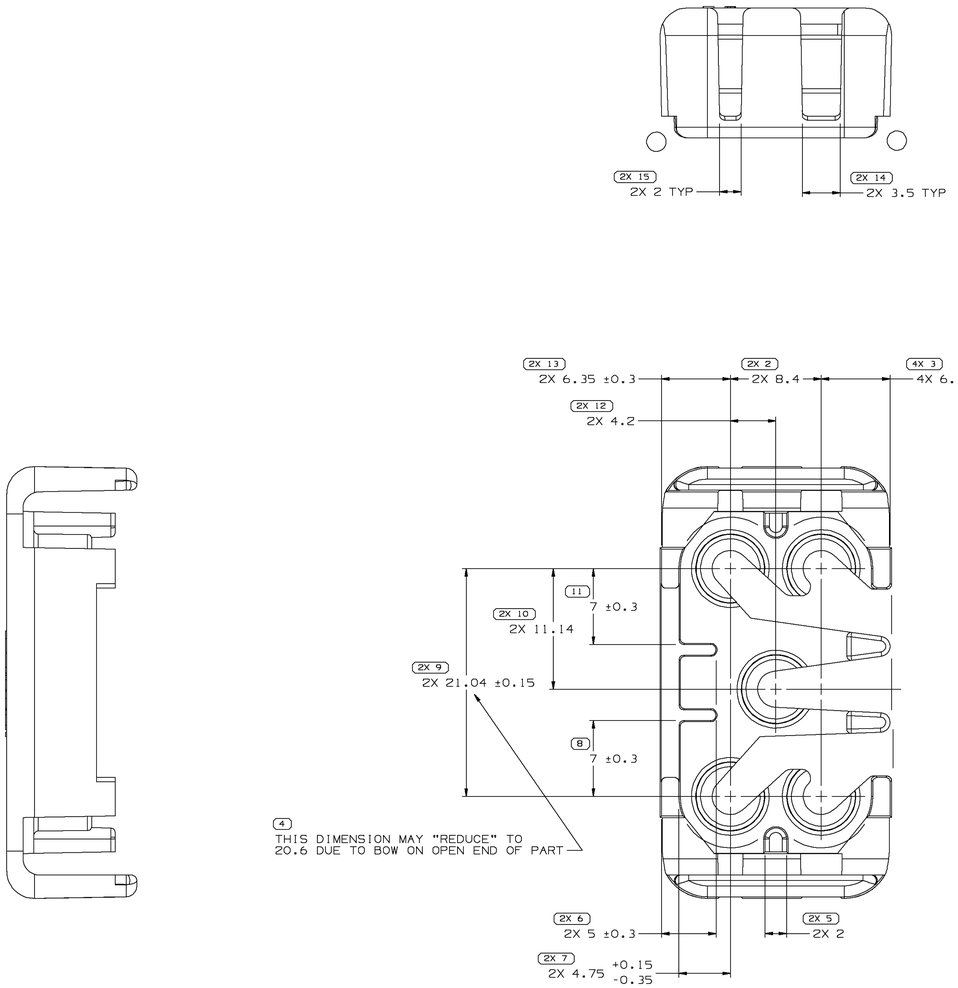

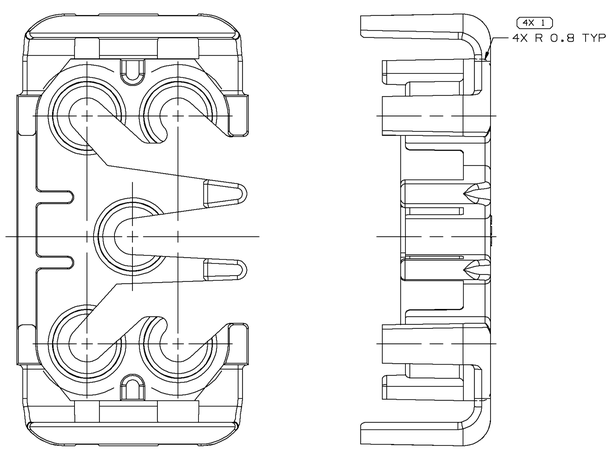

OPTIONAL CONSTRUCTION

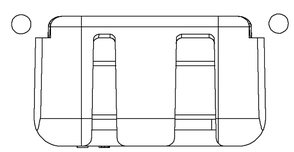

NOTES

1. UNLESS OTHERWISE SPECIFIED AND/OR INDICATED:
   DIMENSIONS ARE TO FACE OF VIEW SHOWN AND
   AUTOMATICALLY ROUNDED BY COMPUTER FOR INSPECTION
   (SEE MATH MODEL FOR PRECISE DIMENSIONS). FOR ALL
   OTHER DIMENSIONS NOT SHOWN BUT REQUIRED FOR TOOL
   BUILD, SEE MATH MODEL FOR PRECISE TOOL PATH DATA.
2. MATERIAL RECYCLING CODE >PA66< PER SAE J1344. (1)X(0.1) RAISED CHARACTERS AS SHOWN TO BE LOCATED ON ANY EXTERIOR SURFACE. OPTIONAL CONSTRUCTION TO BE NO MATERIAL RECYCLING CODE.
3. THIS PART IS NOT CONTROLLED FOR AUTOMATIC FEEDING.
4. MATING COMPONENTS OR EQUIVALENT:
   CONN & SEAL ASM 12052813
5. (1)X(0.1) RAISED DELPHI CORPORATE BRAND TO BE LOCATED ON ANY EXTERIOR SURFACE, PREFERABLY VISIBLE AT FINAL ASSEMBLY. OPTIONAL CONSTRUCTION TO BE "PED" OR NO LOGO.
6. MAX CABLE DIAMETER THAT WILL FIT PART IS 3.13.

(16) PROCESS SENSITIVE DIMENSION

DIMENSIONS ENCLOSED IN ( ) INDICATE REFERENCE DIMENSIONS AND NO TOLERANCE LIMITS ARE ESTABLISHED

R 0.1 MAX
R 0.2 MAX
SHARP CORNER TOLERANCE

DIMENSIONAL RANGE (MM) FROM	> 0 TO 20	> 20 30	> 30 70	> 70 100	>100 150	>150 200	>200 250	>250 300	>300 400
TOLERANCE UNLESS OTHERWISE SPECIFIED (CHART E1)	±0.15	±0.2	±0.3	±0.4	±0.5	±0.6	±0.8	±1	±1.2

ANGULAR TOLERANCE ±2°

THIRD ANGLE PROJECTION

DO NOT SCALE
USE MATH DATA

UNIGRAPHICS

DWG TYPE	
PART DRAWING	
STYLE	
VOLUME (CM³) 2.743	DISTR CODE D
ROUTING 6900	

UNLESS OTHERWISE SPECIFIED

THIS DOCUMENT IS IN ACCORDANCE WITH ASME Y14.5M-1994 AS AMENDED BY THE GM GLOBAL DIMENSIONING AND TOLERANCING ADDENDUM - 1997. ALL GEOMETRIC TOLERANCES AND RELATED DATUMS APPLY RFS. RULE #1(PERFECT FORM AT MMC) DOES NOT APPLY WHEN RELATIONSHIP BETWEEN FEATURES IS ESTABLISHED BY ORIENTATION OR LOCATION TOLERANCES. SIZE DATUMS (IF ANY) MAY BE GAGED SEPARATELY, REGARDLESS OF FUNCTIONAL REQUIREMENTS.
ALL DIMENSIONS ARE IN MILLIMETERS

REFERENCE

DELPHI

DELPHI PACKARD ELECTRIC SYSTEMS
WARREN, OH

		DATE
DR		
APVD1	R. HERMOSILLO	10SE02
APVD2	R. CHACON	10SE02
APVD3	R. CORZAS	12SE02
APVD4		
APVD5		

SUBSTANCES OF CONCERN AND RECYCLED CONTENT PER DELPHI 10949001

MATERIAL
M3592025 PA66 HS IM GRA MD

DRAWING NAME
TPA M/P 280

DRAWING NUMBER
12052816

SIZE	SCALE	FRAME NO	SHEET NO	STG	REV	N/P
A0	5:1	1 OF 1	1 OF 1	R	04	AB

Mouser Electronics

Authorized Distributor

Click to View Pricing, Inventory, Delivery & Lifecycle Information:

Aptiv:
12052816