THIS DRAWING IS UNPUBLISHED. RELEASED FOR PUBLICATION 20
© COPYRIGHT 20 BY TYCO ELECTRONICS CORPORATION, ALL RIGHTS RESERVED.

LOC	DIST
AP	-

REVISIONS

P	LTR	DESCRIPTION	DATE	DWN	APVD
	C	REDRAW/ADDED -2 EC 134/02	10AUG2002	CRM	PLF
	D	REDRAW BY EC 088/03	27MAR03	EGS	PLF
	E	REVISED BY EC - LE10-0152/04	02AUG2004	EJGS	PLF

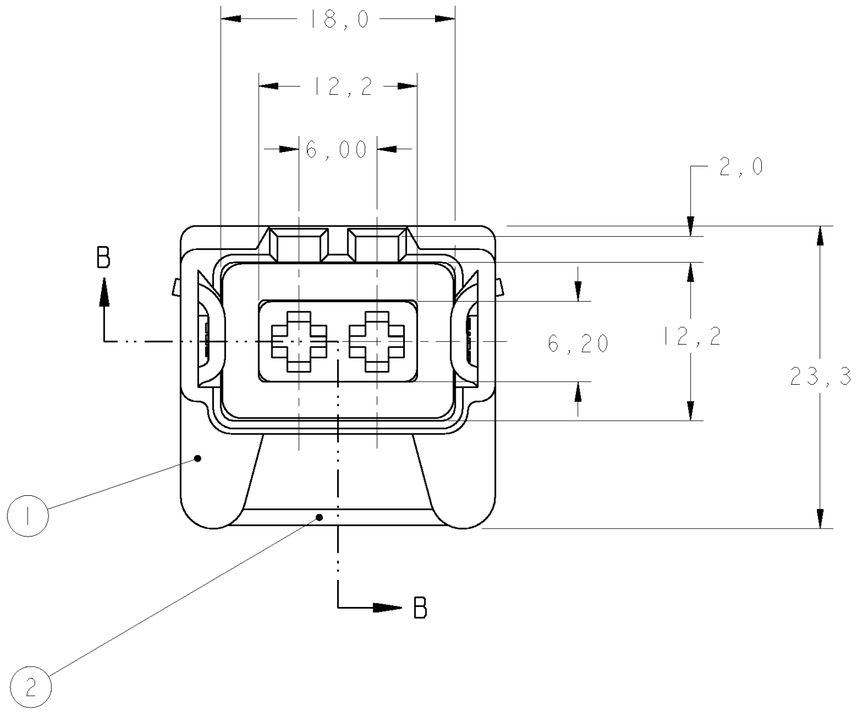

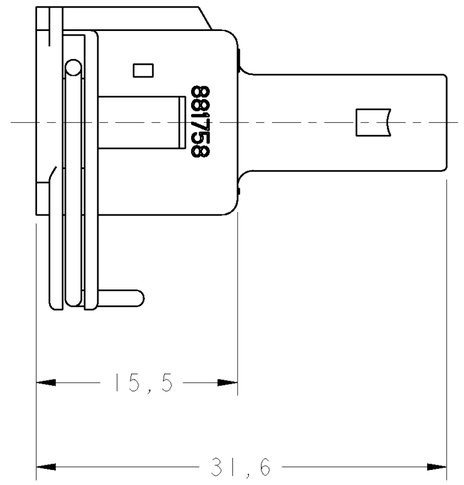

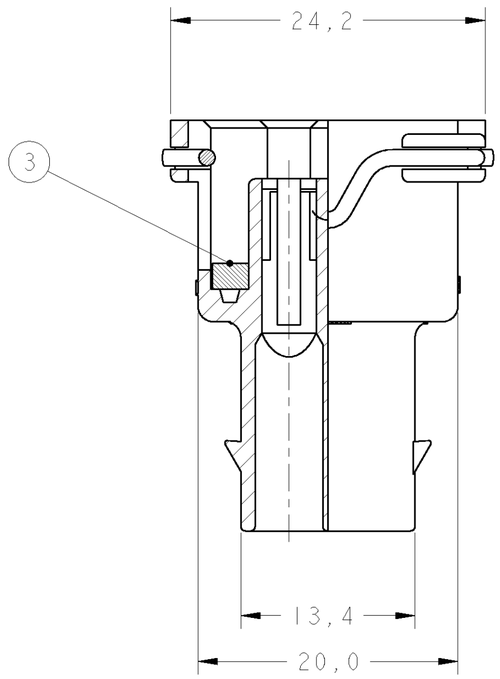

SECTION B-B

GRAVAÇÃO MARKING
LOGOTIPO AMP TYCO LOGO
CÓDIGO PAÍS PRODUTOR MANUFACTURER COUNTRY CODE
NÚMERO COMPONENTE AMP TYCO COMPONENT NUMBER
NÚMERO CAVIDADE CAVITY NUMBER
IDENTIFICAÇÃO CIRCUITO CIRCUIT IDENTIFICATION

1 -VER DESENHO DE CLIENTE RESTRITO VW.

1 -SEE RESTRICTED CUSTOMER DRAWING VW.

2 -VER DESENHO DE CLIENTE RESTRITO FORD

2 -SEE RESTRICTED CUSTOMER FORD

REQ. PER ASS'Y			ITEM	DESCRIPTION	MATERIAL	FINISH
	1		3	RUBBER SEAL	SILICONE	LARANJA / ORANGE
	1		2	SPRING	DIN 2076 Ø1,25	-
	1		1	HSG, 2 POSN, JR. POWER TIMER	P.A 6.6+33% G.F	PRETO / BLACK
2 -3	-2	-1 1				
881757						

THIS DRAWING IS A CONTROLLED DOCUMENT FOR TYCO ELECTRONICS CORPORATION. IT IS SUBJECT TO CHANGE AND THE CONTROLLING ENGINEERING ORGANIZATION SHOULD BE CONTACTED FOR THE LATEST REVISION.

DIMENSIONS: mm

TOLERANCES UNLESS OTHERWISE SPECIFIED:
0 PLC ±-
1 PLC ±0,3
2 PLC ±0,2
3 PLC ±-
4 PLC ±-
ANGLES ±-

MATERIAL -
FINISH -

DWN C. MENEGHIM 10AUG2002
CHK P.L.FARIA 10AUG2002
APVD L.W.PRADO 10AUG2002
PRODUCT SPEC -
APPLICATION SPEC -
WEIGHT -

tyco Electronics
TYCO ELECTRONICS do Brasil LTDA.
São Paulo , Brasil

NAME HOUSING, ASS'Y., 2 POSN., JUNIOR POWER TIMER -

SIZE	CAGE CODE	DRAWING NO	RESTRICTED TO
A2	00779	C-881757	-

CUSTOMER DRAWING
SCALE 3:1 SHEET 1 OF 1 REV E

AMP 1471-9 REV 31MAR2000

Pro/ENGINEER DRAWING

Mouser Electronics

Authorized Distributor

Click to View Pricing, Inventory, Delivery & Lifecycle Information:

TE Connectivity:
881757-1 881757-2