UNPLATED MATERIAL NUMBER	UNPLATED ENG. NUMBER	UNPLATED MAT. NO. ON TAPE	UNPLATED ENG. NO. ON TAPE	PLATED MATERIAL NUMBER	PLATED ENGINEERING NUMBER	PLATED MAT. NO. ON TAPE	PLATED ENG. NO ON TAPE	SEE DETAIL	STUD SIZE	WIRE RANGE	"S" ±.015/0.38	"L" ±.050/1.27	"W" ±.035/0.89	"C" ±.050/1.27	"B" ±.020/0.51	"T" ±.020/0.51
192210408	BCL-810	~~190820012~~	~~BCL-810T~~	192210223	BCL-810-PL	190820011	BCL-810-PLT	A	10/4.8mm	8 AWG/10mm²	.214/5.45	1.187/30.15	.438/11.13	.376/9.55	.185/4.70	.070/1.78
192210409	BCL-814	190820014	BCL-814T	192210224	BCL-814-PL	190820013	BCL-814-PLT	A	1/4"/M6	8 AWG/10mm²	.278/7.06	1.187/30.15	.438/11.13	.376/9.55	.185/4.70	.070/1.78
192210562	BCL-814-WP	---	---	192210563	BCL-814-WP-PL	---	---	---	1/4"/M6	8 AWG/10mm²	.278/7.06	1.313/33.35	.594/15.09	.422/10.72 L2	.185/4.70	.070/1.78
192210411	BCL-8516	~~190820017~~	~~BCL-8516T~~	192210225	BCL-8516-PL	---	---	A	5/16"/M8	8 AWG/10mm²	.340/8.63	1.187/30.15	.438/11.13	.376/9.55	.185/4.70	.070/1.78
192210482	BCL-8516-WP	---	---	192210483	BCL-8516-WP-PL	190820016	BCL-8516-PLT	B	5/16"/M8	8 AWG/10mm²	.340/8.63	1.313/33.35	.594/15.09	.422/10.72	.185/4.70	.070/1.78
192210410	BCL-838-WP	190820015	BCL-838-WPT	192210226	BCL-838-WP-PL	192210566	BCL-838-WP-PLT	B	3/8"/M9	8 AWG/10mm²	.400/10.16	1.313/33.35	.594/15.09	.422/10.72	.185/4.70	.070/1.78
192210481	BCL-838-XWP	---	---	192210484	BCL-838-XWP-PL	---	---	---	3/8"/M9	8 AWG/10mm²	.400/10.16	1.469/37.31	.766/19.46	.394/10.01	.185/4.70	.070/1.78
192210415	BCL-812-XWP	---	---	192210414	BCL-812-XWP-PL	---	---	---	1/2"/M12	8 AWG/10mm²	.520/13.21	1.469/37.31	.766/19.46	.394/10.01	.185/4.70	.070/1.78
192210425	BCL-610	---	---	192210424	BCL-610-PL	190820003	BCL-610-PLT	B	10/4.8mm	6 AWG/16mm²	.214/5.45	1.281/32.54	.438/11.13	.381/9.68 L2	.232/5.89	.075/1.90
192210406	BCL-614-WP	~~190820006~~	~~BCL-614T~~	192210227	BCL-614-WP-PL	190820005	BCL-614-PLT	B	1/4"/M6	6 AWG/16mm²	.278/7.06	1.406/35.72	.594/15.09	.427/10.85 L2	.232/5.89	.080/2.03
192210494	BCL-614	---	---	192210495	BCL-614 -PL	~~192210498~~	~~BCL-614T-PLT~~	B	1/4"/M6	6 AWG/16mm²	.278/7.06	1.281/32.54	.438/11.13	.381/9.68 L2	.232/5.89	.075/1.90
192210407	BCL-6516-WP	---	---	192210228	BCL-6516-WP-PL	190820009	BCL-6516-PLT	B	5/16"/M8	6 AWG/16mm²	.340/8.63	1.406/35.72	.594/15.09	.427/10.85 L2	.232/5.89	.080/2.03
192210493	BCL-6516	190820010	BCL-6516T	192210492	BCL-6516-PL	~~192210499~~	~~BCL-6516-PLT~~	B	5/16"/M8	6 AWG/16mm²	.340/8.63	1.281/32.54	.438/11.13	.381/9.68 L2	.232/5.89	.075/1.90
192210384	BCL-638-WP	~~190820008~~	~~BCL-638T~~	192210229	BCL-638-WP-PL	190820007	BCL-638-PLT	B	3/8"/M9	6 AWG/16mm²	.400/10.16	1.406/35.72	.594/15.09	.427/10.85 L2	.232/5.89	.080/2.03
192210569	BCL-638-XWP	---	---	192210568	BCL-638-XWP-PL	---	---	---	3/8"/M9	6 AWG/16mm²	.400/10.16	1.563/39.70	.766/19.46	.472/11.99 L2	.232/5.89	.080/2.03
192210417	BCL-612-XWP	---	---	192210416	BCL-612-XWP-PL	190820004	BCL-612-PLT	B	1/2"/M12	6 AWG/16mm²	.520/13.21	1.563/39.70	.766/19.46	.472/11.99 L2	.232/5.89	.080/2.03

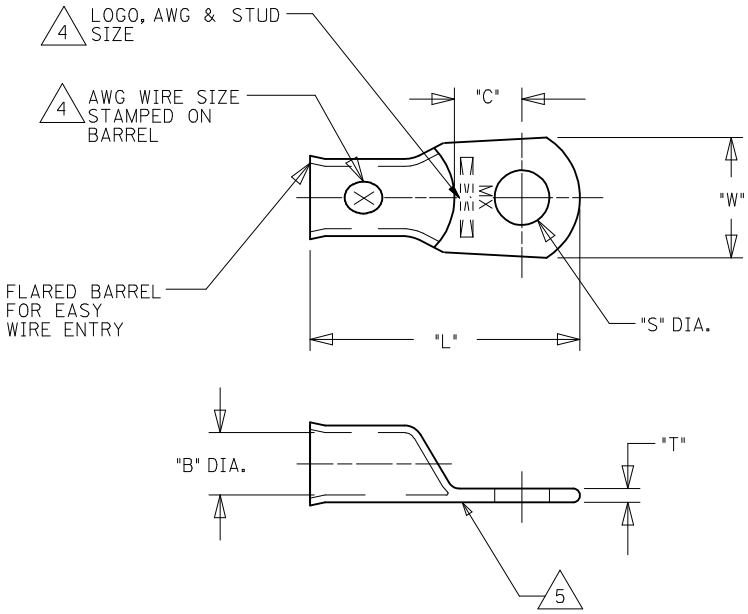

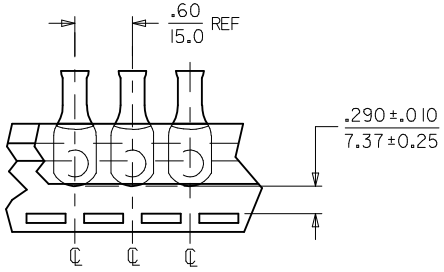

DETAIL A

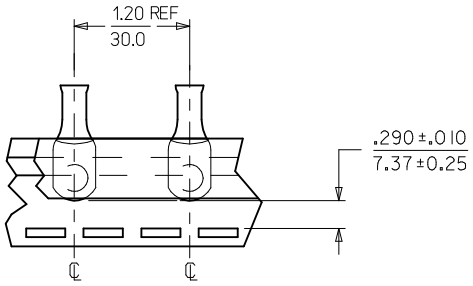

DETAIL B

SALES DRAWING

NOTES:
1. FOR INSPECTION SIGHT HOLE, PLEASE CONSULT FACTORY.
2. OTHER STUD SIZES MAY BE AVAILABLE, PLEASE CONSULT FACTORY.
3. MATERIAL: COPPER
   PLATING: TIN
4. MARKINGS CAN BE AT EITHER LOCATION SHOWN.
5. IF TONGUE IS TO BE BENT AT ANY ANGLE. IT MUST BE BENT AROUND A RADIUS ONE HALF THE TONGUE THICKNESS.
6. ALL PARTS ARE ROHS COMPLIANT.

CORRECTED "C" DIMS
EC NO: IPG2014-0913
DRWN:GROJAS01 2013/11/18
CHKD:JMACNEIL 2013/11/18
APPR:JMACNEIL 2013/12/01
DESCRIPTION
L2
REV

QUALITY SYMBOLS
▼=0
(C)=0

GENERAL TOLERANCES (UNLESS SPECIFIED)

	mm	INCH
4 PLACES	± ---	± ---
3 PLACES	± ---	± ---
2 PLACES	± ---	± ---
1 PLACE	± ---	± ---
ANGULAR ±---°		

DRAFT WHERE APPLICABLE MUST REMAIN WITHIN DIMENSIONS

DIMENSION STYLE: IN/MM
SCALE: ---
DESIGN UNITS: INCH
THIRD ANGLE PROJECTION

DRAWN BY	DMYRICK	DATE 2005/5/3
CHECKED BY	RDEROSS	DATE 2005/5/3
APPROVED BY	RDEROSS	DATE 2005/5/3

TITLE: EYELET STYLE COPPER TERMINALS 8 AND 6 AWG LUGS

molex MOLEX INCORPORATED

MATERIAL NO.: SEE CHART
DOCUMENT NO.: SD-19221-001
SHEET NO.: 1 OF 1
SIZE: C

THIS DRAWING CONTAINS INFORMATION THAT IS PROPRIETARY TO MOLEX INCORPORATED AND SHOULD NOT BE USED WITHOUT WRITTEN PERMISSION

Mouser Electronics

Authorized Distributor

Click to View Pricing, Inventory, Delivery & Lifecycle Information:

Molex:
19221-0751