THIS DRAWING IS UNPUBLISHED. RELEASED FOR PUBLICATION -,- .
© COPYRIGHT - By - ALL RIGHTS RESERVED.

REVISIONS

P	LTR	DESCRIPTION	DATE	DWN	APVD
	R4	REVISED PER ECO-12-017913	10OCT12	KH	MZ
	S	REVISED PER ECO-17-013721	16NOV2017	RS	MZ

PIN # REF	LENGTH	STYLE	FREE DIA	(LH)	NUM LOUV	PLATING (NOTE)	MAT'L (NOTE)	MAT'L THK	REF		
[.062]	--	A	[.09]	[.016]	7	UNPL	12	0.12[.005]	05018	5-192044-0	OBSOLETE
[.062]	--	A	[.09]	[.016]	8	7-2	12	0.10[.004]	05069	4-192044-9	
[.062]	--	A	[.09]	[.016]	8	UNPL	12	0.10[.004]	05107	4-192044-8	19
[.062]	--	A	[.09]	[.018]	7	4-2	12	0.10[.004]	05111	4-192044-7	OBSOLETE
[.062]	--	A	[.09]	[.018]	7	UNPL	12	0.10[.004]	05110	4-192044-6	OBSOLETE
[.047]	--	A	[.09]	[.016]	7	7-2	12	0.12[.005]	05006	4-192044-5	19
[.062]	--	A	[.09]	[.016]	6	3-2	12	0.12[.005]	05005	4-192044-4	
[.040]	--	A	[.09]	[.015]	6	7-2	12	0.12[.005]	05004	4-192044-3	OBSOLETE 19
[.032]	--	A	[.06]	[.020]	4	UNPL	13	0.12[.005]	05041	4-192044-2	OBSOLETE 17
[.030]	--	A	[.06]	[.018]	4	3-2	12	0.12[.005]	05039	4-192044-1	
[.030]	--	A	[.06]	[.018]	4	1-2	12	0.12[.005]	05033	4-192044-0	OBSOLETE
[.030]	--	A	[.06]	[.018]	4	UNPL	12	0.12[.005]	05030	3-192044-9	19
NOT AVAILABLE		C	--	[.027]	3	3-2	12	0.12[.005]	05003	3-192044-8	OBSOLETE 17
--	--	C	--	[.027]	73	1-2	14	0.10[.004]	05152	3-192044-7	OBSOLETE
--	--	C	--	[.027]	73	UNPL	14	0.10[.004]	05161	3-192044-6	
--	--	C	--	[.022]	21	1-2	12	0.12[.005]	05169	3-192044-5	
--	--	C	--	[.022]	21	UNPL	12	0.12[.005]	05168	3-192044-4	
--	--	C	--	[.022]	17	UNPL	12	0.12[.005]	--	3-192044-3	
--	--	C	--	[.022]	17	5-6	12	0.12[.005]	05127	3-192044-2	
--	--	C	--	[.022]	13	1-2	12	0.12[.005]	05136	3-192044-1	
--	15 [72]	C	--	[.022]	--	4-2	12	0.10[.004]	05116	3-192044-0	
--	15 [144]	C	--	[.022]	--	UNPL	12	0.10[.004]	05117	2-192044-9	
--	[72]	C	--	[.022]	--	1-2	12	0.10[.004]	05181	2-192044-8	
SUPERSEDED BY 193792-2									05159	2-192044-7	19
SUPERSEDED BY 193792-1									05158	2-192044-6	
--	NOTE 14	C	--	[.022]	--	3-2	12	0.15[.006]	05001	2-192044-5	
--	NOTE 14	C	--	[.022]	--	UNPL	12	0.15[.006]	05150	2-192044-4	
--	NOTE 14	C	--	[.018]	--	1-2	12	0.15[.006]	05000	2-192044-3	
--	NOTE 14	C	--	[.018]	--	UNPL	12	0.15[.006]	05058	2-192044-2	
--	NOTE 14	C	--	[.022]	--	3-2	12	0.12[.005]	05035	2-192044-1	
SUPERSEDED BY 1-192044-9									05095	2-192044-0	
--	NOTE 14	C	--	[.022]	--	1-2	12	0.12[.005]	05063	1-192044-9	18
--	NOTE 14	C	--	[.022]	--	UNPL	12	0.12[.005]	05037	1-192044-8	OBSOLETE
--	NOTE 14	C	--	[.018]	--	3-2	12	0.12[.005]	05036	1-192044-7	
--	NOTE 14	C	--	[.018]	--	1-2	12	0.12[.005]	05080	1-192044-6	
--	NOTE 14	C	--	[.018]	--	UNPL	12	0.12[.005]	05034	1-192044-5	
--	NOTE 14	C	--	[.022]	--	UNPL	14	0.12[.005]	05139	1-192044-4	
--	NOTE 14	C	--	[.022]	--	UNPL	14	0.10[.004]	05142	1-192044-3	19
NOT AVAILABLE										17 1-192044-2	OBSOLETE
NOT AVAILABLE										17 1-192044-1	
NOT AVAILABLE										17 1-192044-0	
NOT AVAILABLE										17 192044-9	
NOT AVAILABLE										17 192044-8	
NOT AVAILABLE										17 192044-7	
NOT AVAILABLE										17 192044-6	
NOT AVAILABLE										17 192044-5	
NOT AVAILABLE										17 192044-4	
NOT AVAILABLE										17 192044-3	
NOT AVAILABLE										17 192044-2	
NOT AVAILABLE										17 192044-1	

1471-9 (1/15)

1 FINISH-SILVER PLATE 200| IN THICK MIN.

2 FINISH-NICKEL PLATE 40 | IN THICK MIN.

3 FINISH-GOLD PLATE 10 | IN THICK MIN.

4 FINISH-GOLD PLATE 20 | IN THICK MIN.

5 FINISH-GOLD PLATE 80 | IN THICK MIN.

6 FINISH-NICKEL PLATE 50 | IN THICK MIN.

7 FINISH-GOLD PLATE 50 | IN THICK MIN.

8 FINISH-NICKEL PLATE 100 | IN THICK MIN.

9 FINISH-TIN PLATE 200| IN THICK MIN.

10 NOT USED.

11 PLATING NOTES ARE TO BE INTERPRETED AS FOLLOWS, 6-8 AS 6 OVER 8.

12 MATERIAL: CDA17200 BeCu.

13 MATERIAL-STAINLESS STEEL.

14 PRODUCT IS SOLD BY THE FOOT.

15 COIL TO 3 INCH INSIDE DIAMETER.

16 MATERIAL: CDA 17410 BeCu.

17 OBSOLETE PART NUMBER

18 MATERIAL CERTIFICATION REQUIRED.

19 OBSOLETE PARTS: OBSOLETE CIS STREAMLINING PER D.RENAUD/D.SINISI

THIS DRAWING IS A CONTROLLED DOCUMENT.

DIMENSIONS: INCHES

TOLERANCES UNLESS OTHERWISE SPECIFIED:
0 PLC ± -
1 PLC ± -
2 PLC ± .02
3 PLC ± .010
4 PLC ± -
ANGLES ± -

MATERIAL: SEE TABLE

FINISH: SEE TABLE

DWN RA JAYNE 12-13/91
CHK J.TURNER 08-04-93
APVD S. SIEGRIST 8/5/93
PRODUCT SPEC —
APPLICATION SPEC —
WEIGHT —

TE Connectivity

NAME CONTACT BAND,FEMALE

SIZE A2 | CAGE CODE 00779 | DRAWING NO C-192044 | RESTRICTED TO —

CUSTOMER DRAWING | SCALE NTS | SHEET 1 OF 2 | REV S

192044

THIS DRAWING IS UNPUBLISHED. RELEASED FOR PUBLICATION -,- .
© COPYRIGHT - By - ALL RIGHTS RESERVED.

REVISIONS

P	LTR	DESCRIPTION	DATE	DWN	APVD
	-	SEE SHEET 1	-	-	-

FREE DIA	(LH)	STYLE	LENGTH	MATING	NUM LOUV	PLATING (NOTE)	MAT'L (NOTE)	MAT'L THK	REF	PART NO.	
[.20]	[.022]	A	--	[.157]	18	3-2	12	0.12[.005]	05013	9-192044-9	OBSOLETE 19
[.20]	[.022]	A	--	[.157]	18	1-2	12	0.12[.005]	05130	9-192044-8	
[.20]	[.022]	A	--	[.157]	18	UNPL	12	0.12[.005]	05131	9-192044-7	
[.20]	[.018]	A	--	[.152]	16	7-2	12	0.15[.006]	05012	9-192044-6	
[.20]	[.018]	A	--	[.150]	16	7-2	12	0.12[.005]	05011	9-192044-5	
[.19]	[.018]	A	--	[.143]	17	3-2	12	0.12[.005]	05098	9-192044-4	
[.19]	[.018]	A	--	[.143]	17	1-2	12	0.12[.005]	05188	9-192044-3	
[.19]	[.018]	A	--	[.143]	17	UNPL	12	0.12[.005]	05153	9-192044-2	
[.16]	[.015]	--	--	[.125]	14	3-2	12	0.15[.006]	05010	9-192044-1	
[.16]	[.015]	--	--	[.125]	14	1-2	12	0.15[.006]	05057	9-192044-0	
[.15]	[.015]	A	--	[.125]	14	UNPL	12	0.15[.006]	05154	8-192044-9	
[.15]	[.015]	A	--	[.125]	13	UNPL	12	0.15[.006]	05047	8-192044-8	
[.15]	[.022]	A	--	[.125]	13	UNPL	13	0.12[.005]	05026	8-192044-7	
SUPERSEDED BY 193670-4									05183	8-192044-6	OBSOLETE 19
[.16]	[.015]	A	--	[.125]	14	7-2	12	0.12[.005]	05109	8-192044-5	
[.16]	[.015]	A	--	[.125]	14	3-2	12	0.12[.005]	05060	8-192044-4	
[.16]	[.015]	A	--	[.125]	14	1-2	12	0.12[.005]	05061	8-192044-3	
[.16]	[.015]	A	--	[.125]	14	UNPL	12	0.12[.005]	05062	8-192044-2	OBSOLETE 19
[.16]	[.018]	A	--	[.125]	14	4-2	12	0.10[.004]	05132	8-192044-1	
[.16]	[.018]	A	--	[.125]	14	8	12	0.10[.004]	05149	8-192044-0	OBSOLETE 19
[.16]	[.018]	A	--	[.125]	14	UNPL	12	0.10[.004]	05070	7-192044-9	
SUPERSEDED BY 7-192044-9									05068	7-192044-8	
[.20]	[.018]	A	--	[.125]	14	UNPL	12	0.07[.003]	05079	7-192044-7	
SUPERSEDED BY 8-192044-4									--	7-192044-6	
[.06]	[.022]	A	--	[.030]	4	3-2	12	0.10[.004]	05009	7-192044-5	
[.06]	[.022]	A	--	[.030]	4	UNPL	12	0.10[.004]	05008	7-192044-4	
[.13]	[.018]	A	--	[.094]	11	UNPL	12	0.15[.006]	05053	7-192044-3	
[.14]	[.016]	A	--	[.093]	12	3-2	12	0.12[.005]	05126	7-192044-2	OBSOLETE
[.14]	[.016]	A	--	[.093]	12	3-2	12	0.12[.005]	05160	7-192044-1	OBSOLETE 19
[.14]	[.016]	A	--	[.093]	12	1-2	12	0.12[.005]	05128	7-192044-0	OBSOLETE 19
[.14]	[.016]	A	--	[.093]	12	UNPL	12	0.12[.005]	05125	6-192044-9	
[.12]	[.022]	A	--	[.080]	10	8	12	0.20[.008]	05173	6-192044-8	
[.12]	[.022]	A	--	[.080]	10	7-2	12	0.20[.008]	05124	6-192044-7	
[.12]	[.022]	A	--	[.080]	10	3-2	12	0.20[.008]	05007	6-192044-6	OBSOLETE 19
[.12]	[.022]	A	--	[.080]	10	UNPL	12	0.20[.008]	05044	6-192044-5	OBSOLETE 19
[.12]	[.021]	A	--	[.080]	9	3-2	12	0.12[.005]	05179	6-192044-4	
[.12]	[.021]	A	--	[.080]	9	UNPL	12	0.12[.005]	05180	6-192044-3	OBSOLETE 19
[.12]	[.018]	A	--	[.080]	9	7-2	12	0.10[.004]	05172	6-192044-2	
[.12]	[.018]	A	--	[.080]	9	4-2	12	0.10[.004]	05112	6-192044-1	
[.12]	[.018]	A	--	[.080]	9	1-2	12	0.10[.004]	05118	6-192044-0	
[.12]	[.018]	A	--	[.080]	9	UNPL	12	0.10[.004]	05108	5-192044-9	OBSOLETE 19
[.09]	[.020]	A	--	[.065]	8	UNPL	13	0.12[.005]	05031	5-192044-8	OBSOLETE 17
[.09]	[.020]	A	--	[.062]	7	UNPL	13	0.12[.005]	05023	5-192044-7	OBSOLETE 19
[.09]	[.015]	A	--	[.062]	8	3-2	12	0.12[.005]	05042	5-192044-6	
[.09]	[.015]	A	--	[.062]	8	1-2	12	0.12[.005]	05059	5-192044-5	OBSOLETE
[.09]	[.015]	A	--	[.062]	8	--	12	0.12[.005]	05056	5-192044-4	OBSOLETE 19
[.09]	[.015]	A	--	[.062]	8	UNPL	12	0.12[.005]	05104	5-192044-3	
[.09]	[.016]	A	--	[.062]	8	UNPL	12	0.12[.005]	05105	5-192044-2	
[.09]	[.016]	A	--	[.062]	7	6-2	12	0.12[.005]	05106	5-192044-1	

1471-9 (1/15)

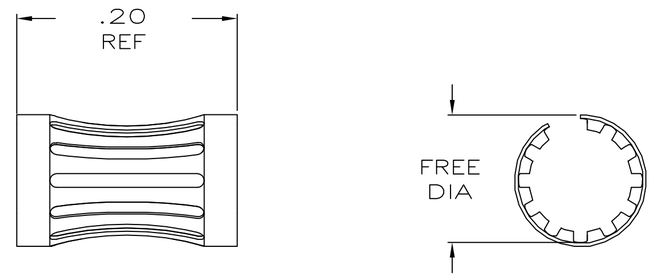

STYLE A

(FEMALE)

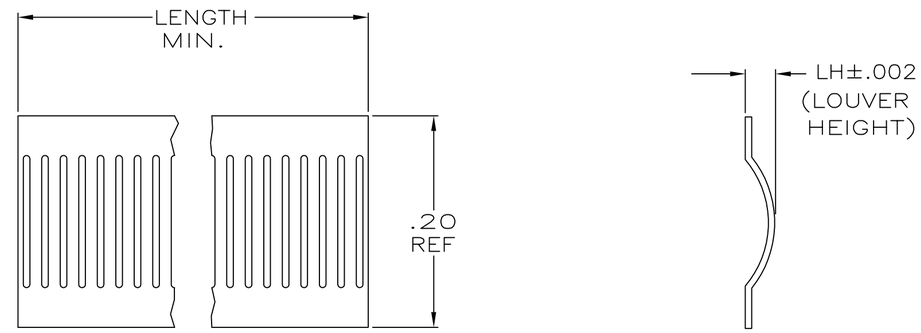

STYLE C

(STRIP)

192044

THIS DRAWING IS A CONTROLLED DOCUMENT.

DIMENSIONS: INCHES

TOLERANCES UNLESS OTHERWISE SPECIFIED:
0 PLC ± -
1 PLC ± -
2 PLC ± .02
3 PLC ± .010
4 PLC ± -
ANGLES ± -

MATERIAL: SEE TABLE

FINISH: SEE TABLE

DWN RA JAYNE 12-13/91
CHK J.TURNER 08-04-93
APVD S. SIEGRIST 8/5/93
PRODUCT SPEC —
APPLICATION SPEC —
WEIGHT —

TE Connectivity

NAME: CONTACT BAND,FEMALE

SIZE A2 | CAGE CODE 00779 | DRAWING NO C-192044 | RESTRICTED TO —

CUSTOMER DRAWING | SCALE NTS | SHEET 2 OF 2 | REV S

Mouser Electronics

Authorized Distributor

Click to View Pricing, Inventory, Delivery & Lifecycle Information:

TE Connectivity:

5-192044-5