THIS DRAWING IS UNPUBLISHED. RELEASED FOR PUBLICATION - , - .
© COPYRIGHT - By - ALL RIGHTS RESERVED.

LOC	DIST
AD	00

REVISIONS

P	LTR	DESCRIPTION	DATE	DWN	APVD
	C6	REVISED PER ECR-12-010110	04JUNE12	W.W	C.W

9 OBSOLETE PARTS: OBSOLETE CIS STREAMLINING PER D.RENAUD/D.SINISI

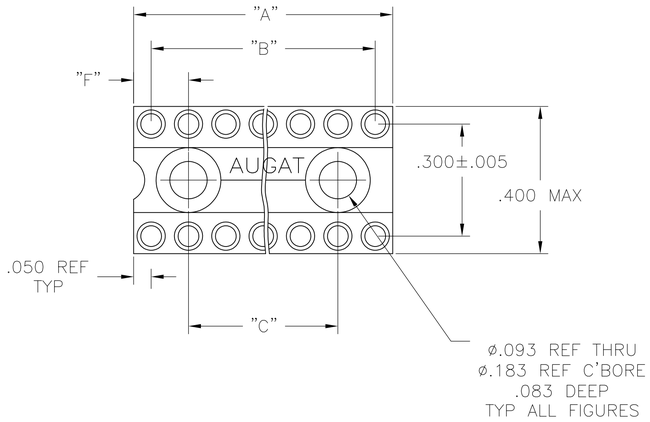

FIG. 1

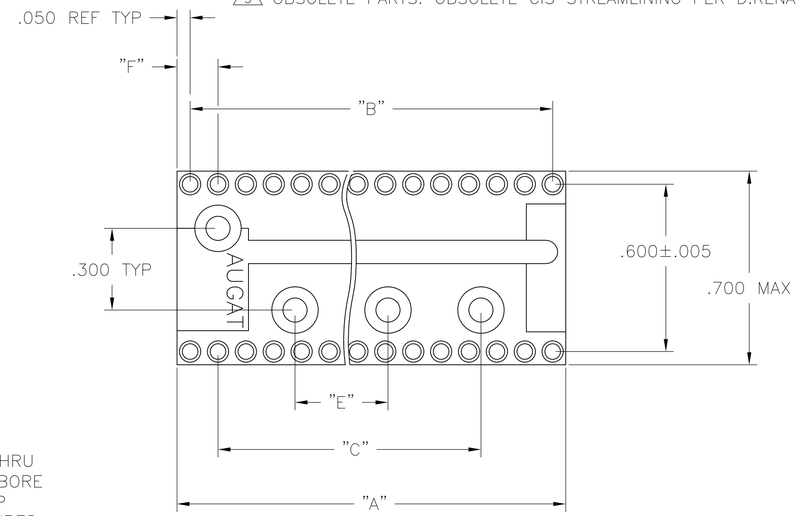

FIG. 2

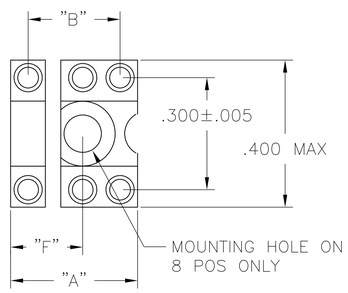

FIG. 3

6 POS MOUNTING HOLE OMITTED

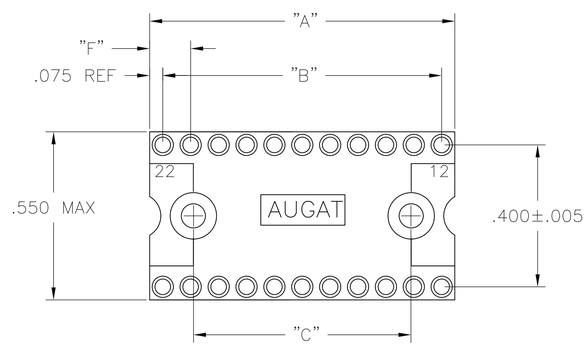

FIG. 4

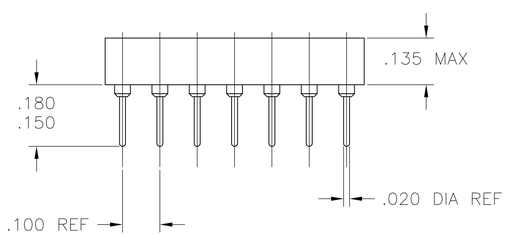

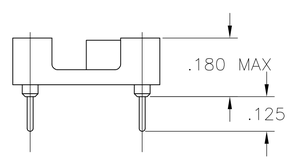

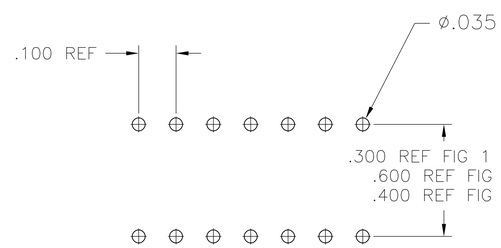

P.C.B. HOLE LAYOUT

TOLERANCE ±.003

1 INSULATOR MATERIAL – THERMOPLASTIC POLYESTER, PCT, BLACK, UL94 V-0.

2 STAMPED CONTACT BECU, PLATED WITH 80-200 µIN THK, TIN, (LEAD FREE) OVER 75-100 µIN THK COPPER.

3 SLEEVE – NICKEL, PLATED WITH 180-340 µIN THK, TIN, (LEAD FREE) OVER 75-100 µIN THK NICKEL.

4 STAMPED CONTACT-BECU, PLATED WITH 25 MIN. GOLD OVER 50-100µIN NICKEL.

5 STAMPED CONTACT-BECU, PLATED WITH GOLD FLASH OVER 50-100µIN NICKEL.

6 ELECTRICAL:
CONTACT RESISTANCE: 10 MILLIOHMS MAX
CONTACT RATING: 3 AMPS
CAPACITANCE: 1.0 pF PER MIL-STD-202, METHOD 305
INSULATION RESISTANCE: 5000 MOHMS MIN @ 500 VDC PER EIA-364-21
DIELECTRIC WITHSTANDING VOLTAGE: 1000 VOLTS (RMS) PER EIA-364-20

7 MECHANICAL:
AFTER INSERTION FORCE: 179 GRAMS AVG
AFTER WITHDRAWAL FORCE: 63 GRAMS AVG
ACCEPTS IC PIN-.009"x.015" THROUGH .011"x.020", OR .016" TO .021" DIAMETER, .150/.105 LONG

8 ENVIRONMENTAL:
OPERATING TEMPERATURE: -55°C TO -105°C

	FINISH	FIG	F	E	D	C	B	"A" MAX	NO. OF POSN	PART NO.
	3 4	4	.150	–	–	.900	1.100	1.200	24	5-1571551-3
	3 4	2	.150	.500	.900	1.500	1.900	2.000	40	5-1571551-2
	3 4	2	.150	.500	.900	1.500	1.700	1.800	36	5-1571551-1
	3 4	2	.150	.500	.900	–	1.500	1.600	32	5-1571551-0
	3 4	2	.150	.500	.900	–	1.300	1.400	28	4-1571551-9
	3 4	2	.150	.500	.900	–	1.100	1.200	24	4-1571551-8
	3 4	4	.175	–	–	.800	1.000	1.150	22	4-1571551-7
	3 4	1	.250	–	–	.500	.900	1.000	20	4-1571551-6
	3 4	1	.150	–	–	.600	.800	.900	18	4-1571551-5
	3 4	1	.150	–	–	.500	.700	.800	16	4-1571551-4
	3 4	1	.150	–	–	.400	.600	.700	14	4-1571551-3
	3 4	3	.200	–	–	–	.300	.400	8	4-1571551-2
	3 4	3	–	–	–	–	.200	.300	6	4-1571551-1
	3 5	4	.150	–	–	.900	1.100	1.200	24	3-1571551-3
	3 5	2	.150	.500	.900	1.500	1.900	2.000	40	3-1571551-2
	3 5	2	.150	.500	.900	1.500	1.700	1.800	36	3-1571551-1
	3 5	2	.150	.500	.900	–	1.500	1.600	32	3-1571551-0
	3 5	2	.150	.500	.900	–	1.300	1.400	28	2-1571551-9
	3 5	2	.150	.500	.900	–	1.100	1.200	24	2-1571551-8
	3 5	4	.175	–	–	.800	1.000	1.150	22	2-1571551-7
	3 5	1	.250	–	–	.500	.900	1.000	20	2-1571551-6
	3 5	1	.150	–	–	.600	.800	.900	18	2-1571551-5
	3 5	1	.150	–	–	.500	.300	.800	16	2-1571551-4
	3 5	1	.150	–	–	.400	.600	.700	14	2-1571551-3
	3 5	3	.200	–	–	–	.300	.400	8	2-1571551-2
	3 5	3	–	–	–	–	.200	.300	6	2-1571551-1
	2 3	4	.150	–	–	.900	1.100	1.200	24	1-1571551-3
	2 3	2	.150	.500	.900	1.500	1.900	2.000	40	1-1571551-2
	2 3	2	.150	.500	.900	1.500	1.700	1.800	36	1-1571551-1
	2 3	2	.150	.500	.900	–	1.500	1.600	32	1-1571551-0
	2 3	2	.150	.500	.900	–	1.300	1.400	28	1571551-9
	2 3	2	.150	.500	.900	–	1.100	1.200	24	1571551-8
	2 3	4	.175	–	–	.800	1.000	1.150	22	1571551-7
	2 3	1	.250	–	–	.500	.900	1.000	20	1571551-6
	2 3	1	.150	–	–	.600	.800	.900	18	1571551-5
	2 3	1	.150	–	–	.500	.300	.800	16	1571551-4
	2 3	1	.150	–	–	.400	.600	.700	14	1571551-3
	2 3	3	.200	–	–	–	.300	.400	8	1571551-2
9 OBSOLETE	2 3	3	–	–	–	–	.200	.300	6	~~1571551-1~~

THIS DRAWING IS A CONTROLLED DOCUMENT.

DIMENSIONS: INCHES

TOLERANCES UNLESS OTHERWISE SPECIFIED:
0 PLC ± –
1 PLC ± –
2 PLC ± –
3 PLC ± .005
4 PLC ± –
ANGLES ± –

MATERIAL –
FINISH –

DWN T.KRAYBILL 08OCT03
CHK K.WRIGHT –
APVD K.WRIGHT –
PRODUCT SPEC –
APPLICATION SPEC –
WEIGHT –

TE Connectivity

NAME
CLOSED FRAME DIP, ECONOMY LEAD FREE
(REF AUGAT 500 SERIES)
ECONOMY (STAMPED CONTACT)

SIZE A1 | CAGE CODE 00779 | DRAWING NO C-1571551 | RESTRICTED TO –

CUSTOMER DRAWING | SCALE 4:1 | SHEET 1 OF 1 | REV C6

4805 (3/11)

Mouser Electronics

Authorized Distributor

Click to View Pricing, Inventory, Delivery & Lifecycle Information:

TE Connectivity:

2-1571551-3