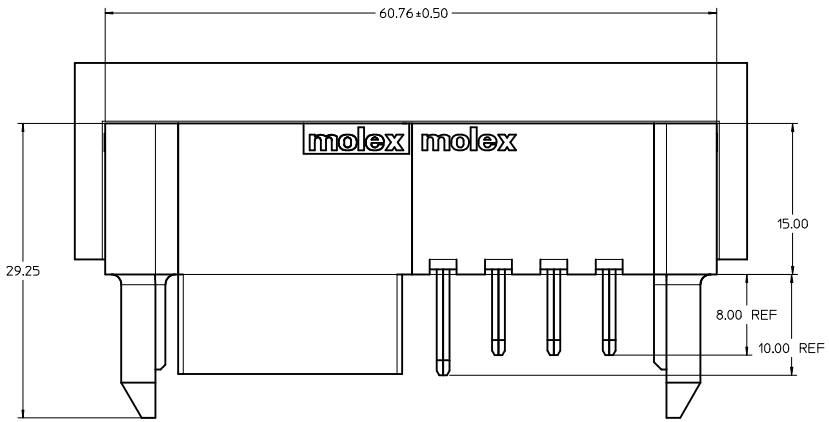

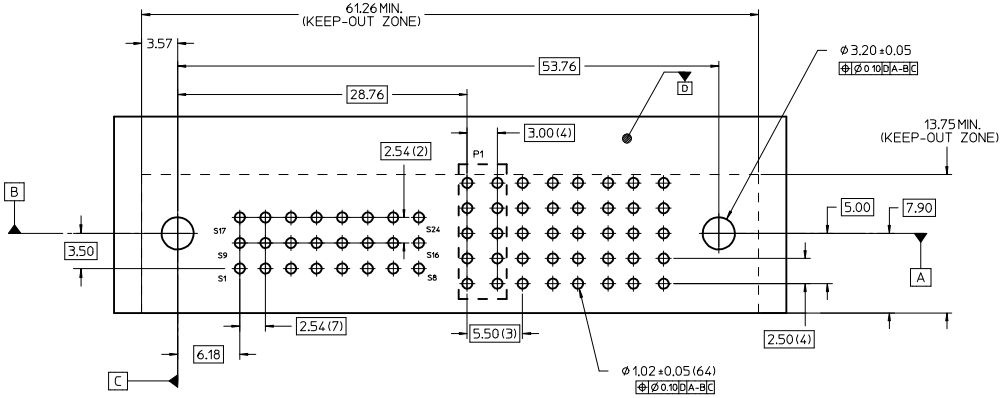

RECOMMENDED PCB LAY-OUT AND KEEP-OUT ZONE

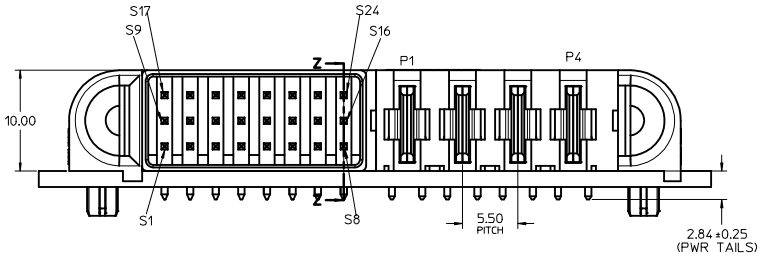

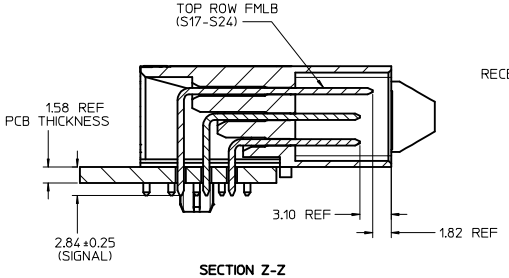

SECTION Z-Z

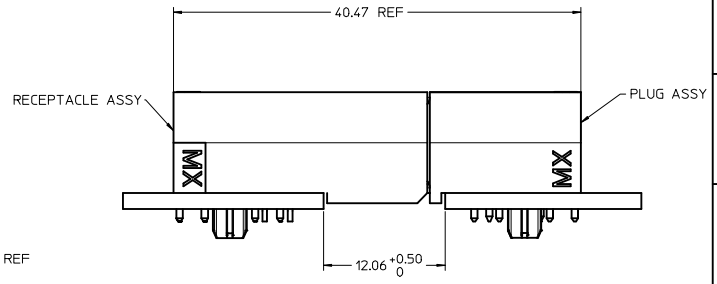

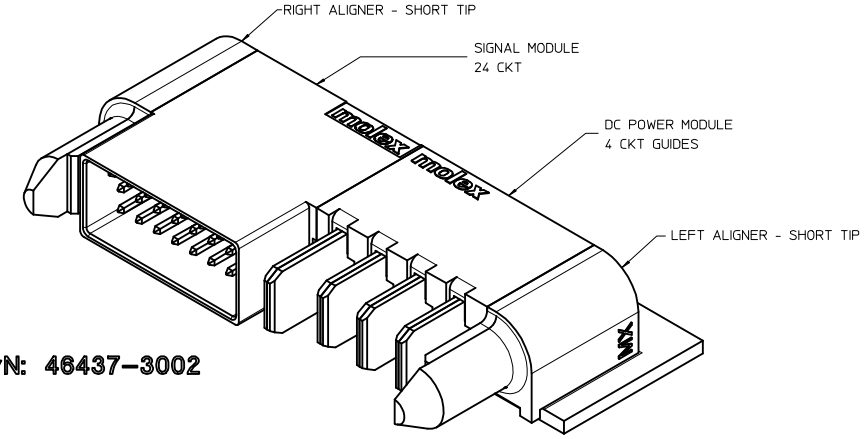

P/N: 46437-3002

NOTES:

1. MATERIAL:
   - -HOUSINGS: LCP UL94, V-0, COLOR: BLACK.
   - -TERMINALS: COPPER ALLOY.
   - -PLATING: 0.00127 NICKEL OVERALL WITH 0.00254 SELECTIVE TIN ON SOLDER TAILS AND 0.000762 SELECTIVE GOLD ON CONTACT AREA.
2. ASSEMBLIES PACKED IN TRAYS, SPQ: TBD
3. PC BOARD REQUIRES SOLDER THRU HOLES, REFER TO PS-46436-100 FOR DETAILS
4. PRODUCT SPEC: PS-46436-100.
5. APPLICATION SPEC: AS-46436-100.
6. PRODUCT TO MEET RoHs REQUIREMENTS.
7. ASSEMBLY MATES TO MOLEX RECEPTACLE ASSEMBLY P/N 46436-3002 OR 46562-3002.

RELEASED	INITIAL RELEASE	2009/05/05	QUALITY SYMBOLS	GENERAL TOLERANCES (UNLESS SPECIFIED)	DIMENSION STYLE: MM ONLY	SCALE: NTS	DESIGN UNITS: METRIC	THIRD ANGLE PROJECTION
	DRWN: JQUILES	2009/05/05		mm / INCH	DRAWN BY: KJKOH DATE: 2009/03/11	TITLE: RA PLUG ASSY TEN60 POWER, GUIDES G-24S-4P_G		
	CHKD: KJKOH	2009/05/05		4 PLACES ± --- / ± ---	CHECKED BY: KJKOH DATE: 2009/03/11			
	APPR: APATEL	2009/05/05		3 PLACES ± --- / ± ---	APPROVED BY: SHONG DATE:	molex MOLEX INCORPORATED		
REV: B	DESCRIPTION			2 PLACES ± 0.25 / ± ---	MATERIAL NO.: 46437-3002	DOCUMENT NO.: SD-46437-302	SHEET NO.: 1 OF 1	
				1 PLACE ± 0.25 / ± ---				
				ANGULAR ±1/2°				
				DRAFT WHERE APPLICABLE MUST REMAIN WITHIN DIMENSIONS	SIZE: A1	THIS DRAWING CONTAINS INFORMATION THAT IS PROPRIETARY TO MOLEX INCORPORATED AND SHOULD NOT BE USED WITHOUT WRITTEN PERMISSION		

tb_frame_A1_P_AM_T
Rev. E 2006/04/15

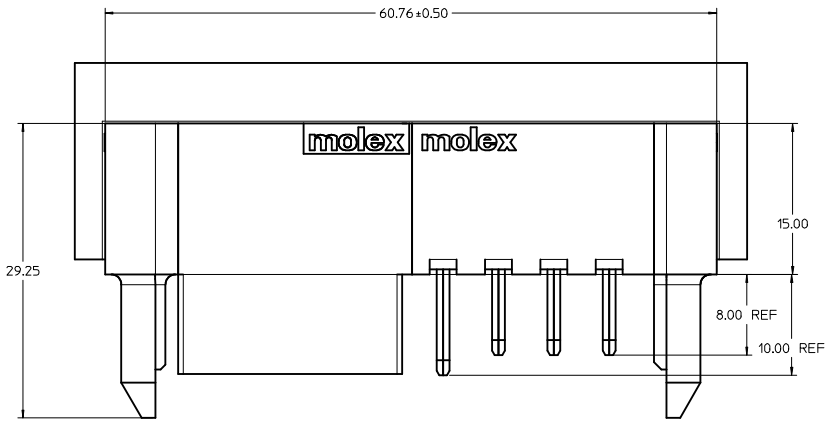

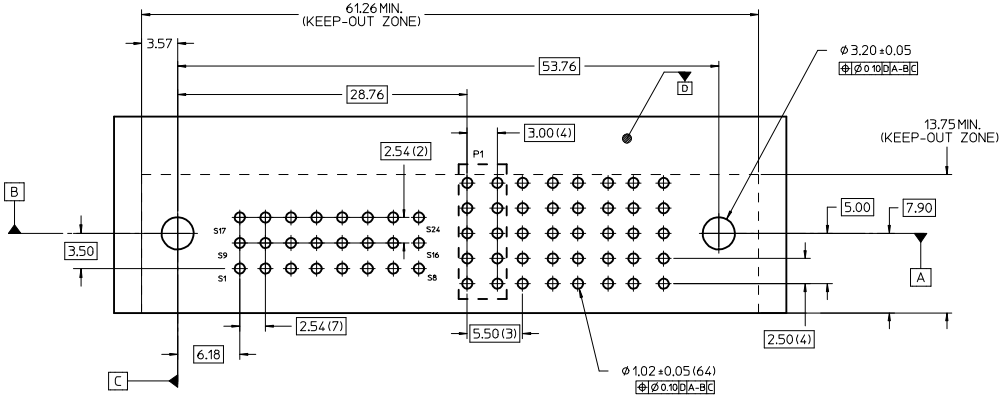

RECOMMENDED PCB LAY-OUT AND KEEP-OUT ZONE

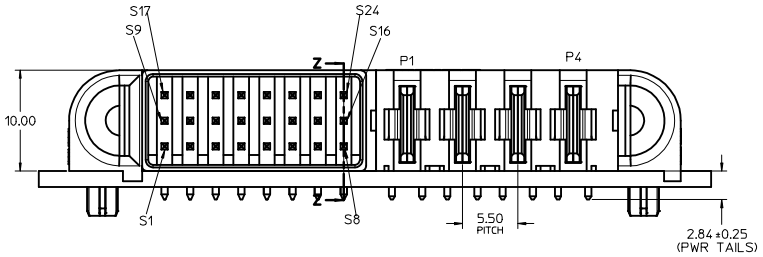

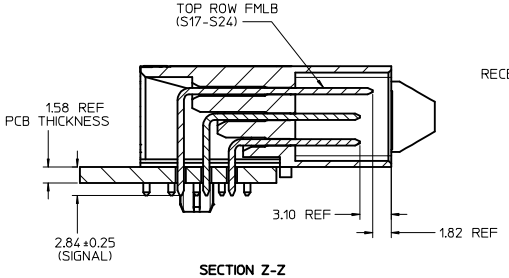

SECTION Z-Z

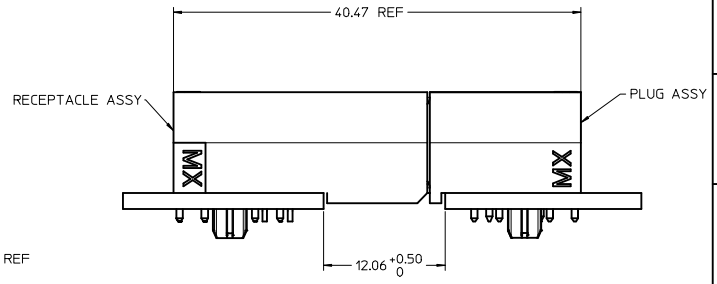

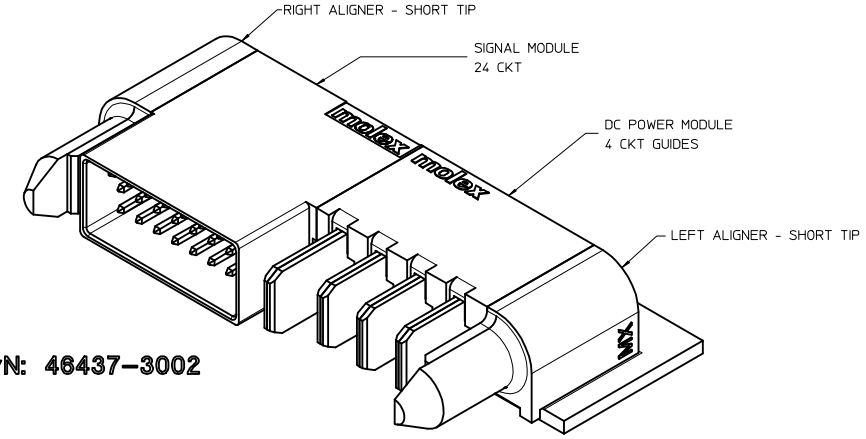

P/N: 46437-3002

NOTES:

1. MATERIAL:
   - -HOUSINGS: LCP UL94, V-0, COLOR: BLACK.
   - -TERMINALS: COPPER ALLOY.
   - -PLATING: 0.00127 NICKEL OVERALL WITH 0.00254 SELECTIVE TIN ON SOLDER TAILS AND 0.000762 SELECTIVE GOLD ON CONTACT AREA.
2. ASSEMBLIES PACKED IN TRAYS, SPQ: TBD
3. PC BOARD REQUIRES SOLDER THRU HOLES, REFER TO PS-46436-100 FOR DETAILS
4. PRODUCT SPEC: PS-46436-100.
5. APPLICATION SPEC: AS-46436-100.
6. PRODUCT TO MEET RoHs REQUIREMENTS.
7. ASSEMBLY MATES TO MOLEX RECEPTACLE ASSEMBLY P/N 46436-3002 OR 46562-3002.

RELEASED	INITIAL RELEASE	2009/05/05	QUALITY SYMBOLS	GENERAL TOLERANCES (UNLESS SPECIFIED)	DIMENSION STYLE: MM ONLY	SCALE: NTS	DESIGN UNITS: METRIC	THIRD ANGLE PROJECTION
	DRWN: JQUILES	2009/05/05		mm / INCH	DRAWN BY: KJKOH DATE: 2009/03/11	TITLE: RA PLUG ASSY TEN60 POWER, GUIDES G-24S-4P_G		
	CHKD: KJKOH	2009/05/05		4 PLACES ± --- / ± ---	CHECKED BY: KJKOH DATE: 2009/03/11			
	APPR: APATEL	2009/05/05		3 PLACES ± --- / ± ---	APPROVED BY: SHONG DATE:	molex MOLEX INCORPORATED		
REV: B	DESCRIPTION			2 PLACES ± 0.25 / ± ---	MATERIAL NO.: 46437-3002	DOCUMENT NO.: SD-46437-302	SHEET NO.: 1 OF 1	
				1 PLACE ± 0.25 / ± ---				
				ANGULAR ±1/2°				
				DRAFT WHERE APPLICABLE MUST REMAIN WITHIN DIMENSIONS	SIZE: A1	THIS DRAWING CONTAINS INFORMATION THAT IS PROPRIETARY TO MOLEX INCORPORATED AND SHOULD NOT BE USED WITHOUT WRITTEN PERMISSION		

tb_frame_A1_P_AM_T
Rev. E 2006/04/15