THIS DRAWING IS UNPUBLISHED. RELEASED FOR PUBLICATION – , – .
© COPYRIGHT – By – ALL RIGHTS RESERVED.

LOC	DIST
GP	00

REVISIONS

P	LTR	DESCRIPTION	DATE	DWN	APVD
	D1	REVISED PER ECO-11-004835	11MAR11	RK	HMR

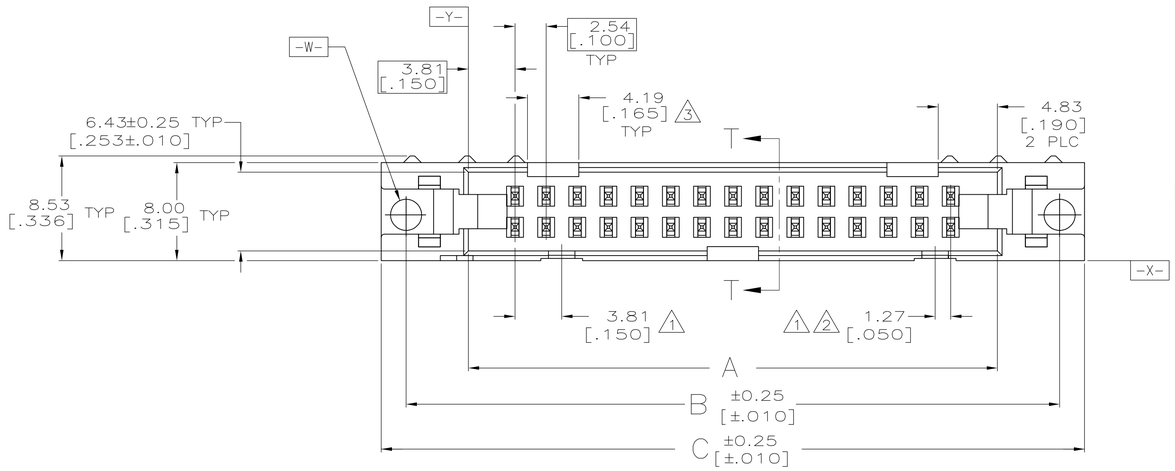

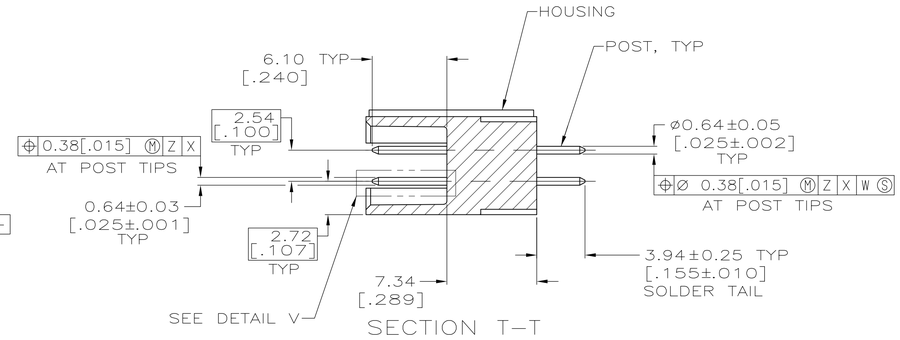

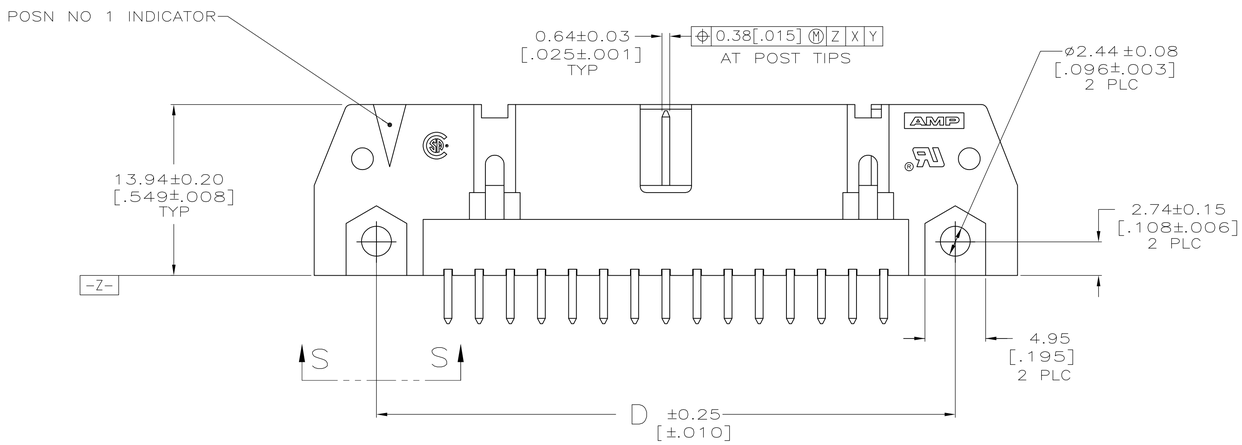

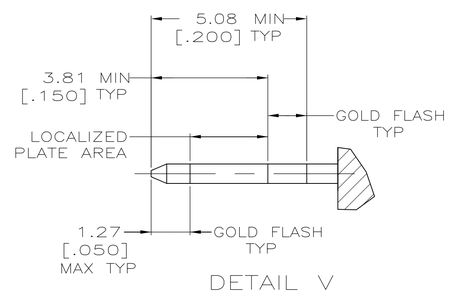

DETAIL V
SCALE 10:1

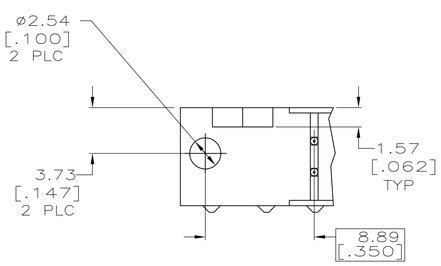

VIEW S-S

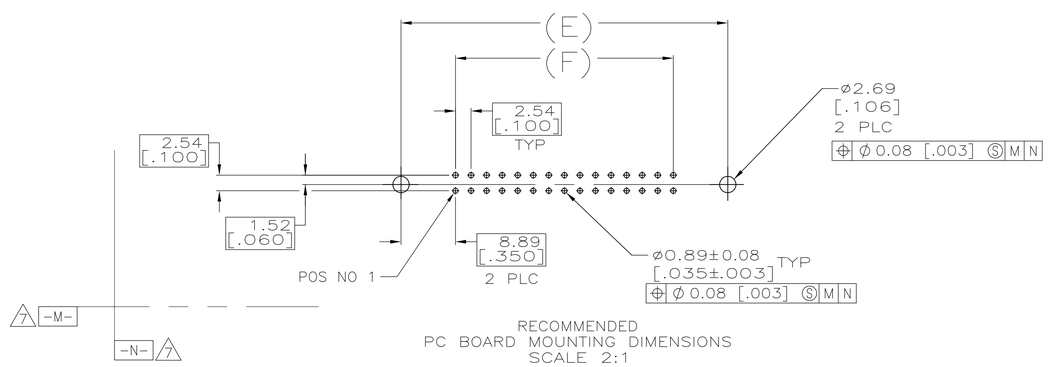

RECOMMENDED
PC BOARD MOUNTING DIMENSIONS
SCALE 2:1

SEE SHEET 2 FOR TABLE & NOTES

THIS DRAWING IS A CONTROLLED DOCUMENT.

DIMENSIONS: mm [INCHES]

TOLERANCES UNLESS OTHERWISE SPECIFIED:
0 PLC ± –
1 PLC ± –
2 PLC ± 0.13[.005]
3 PLC ± –
4 PLC ± –
ANGLES ± –

MATERIAL 5
FINISH 6

DWN G. ATTADIA – DOCK5 01-06-05
CHK S. BOLASH 01-06-05
APVD M. WALMSLEY 01-06-05
PRODUCT SPEC 108-40018
APPLICATION SPEC –
WEIGHT –

TE Connectivity

NAME HEADER ASSY, UNIVERSAL, AMP-LATCH –

SIZE	CAGE CODE	DRAWING NO	RESTRICTED TO
A1	00779	C-5102156	–

CUSTOMER DRAWING | SCALE 4:1 | SHEET 1 OF 2 | REV D1

4805 (3/11)

THIS DRAWING IS UNPUBLISHED. RELEASED FOR PUBLICATION – ,– .
© COPYRIGHT – By – ALL RIGHTS RESERVED.

LOC	DIST
GP	00

REVISIONS

P	LTR	DESCRIPTION	DATE	DWN	APVD
	–	SEE SHEET 1	–	–	–

1. COORDINATE DIMENSION APPLIES FROM BASIC LOCATION.
2. 10 AND 14 POSITION SIZES CONTAIN ONLY ONE SLOT FOR SNAP–IN POLARIZER (MILITARY POLARIZATION) LOCATED AS SHOWN.
3. 10 POSITION SIZE CONTAINS ONLY ONE SLOT FOR DUAL POLARIZATION, LOCATED AS SHOWN.
4. RECOMMENDED PRINTED CIRCUIT BOARD THICKNESS IS 3.18 [.125].
5. MATERIAL:
   HOUSING: GLASS FILLED NYLON OR POLYESTER, UL94V–0 RATED, SEE TABLE FOR COLOR.
   POSTS: PH BRZ OR BRASS
6. FINISH:
   POSTS: GOLD FLASH OVER PALLADIUM–NICKEL PLATE, 0.76μm[.000030] MIN TOTAL ON THE LOCALIZED PLATE AREA, 2.54μm[.000100] MIN TIN PLATE ON THE SOLDER–TAIL, 1.27μm[.000050] MIN NICKEL UNDERPLATE ON THE ENTIRE POST.
   –OR–
   0.76μm[.000030] MIN GOLD PLATE ON THE LOCALIZED PLATE AREA, 2.54μm[.000100] MIN TIN PLATE ON THE SOLDER–TAIL, 1.27μm[.000050] MIN NICKEL UNDERPLATE ON THE ENTIRE POST.
7. DATUMS –M– & –N– TO BE ESTABLISHED BY CUSTOMER.

	HOUSING COLOR	F	E	D	C	B	A	NO OF POSN	PART NUMBER
	BLUE	60.96 [2.400]	78.74 [3.100]	72.64 [2.860]	82.80 [3.260]	78.74 [3.100]	68.58 [2.700]	50	3–5102156–0
	BLUE	48.26 [1.900]	66.04 [2.600]	59.94 [2.360]	70.10 [2.760]	66.04 [2.600]	55.88 [2.200]	40	2–5102156–9
	BLUE	40.64 [1.600]	58.42 [2.300]	52.32 [2.060]	62.48 [2.460]	58.42 [2.300]	48.26 [1.900]	34	2–5102156–8
	BLUE	30.48 [1.200]	48.26 [1.900]	42.16 [1.660]	52.32 [2.060]	48.26 [1.900]	38.10 [1.500]	26	2–5102156–6
OBSOLETE	BLUE	22.86 [.900]	40.64 [1.600]	34.54 [1.360]	44.70 [1.760]	40.64 [1.600]	30.48 [1.200]	20	2–5102156–4
OBSOLETE	BLUE	17.78 [.700]	35.56 [1.400]	29.46 [1.160]	39.62 [1.560]	35.56 [1.400]	25.40 [1.000]	16	2–5102156–3
OBSOLETE	BLUE	10.16 [.400]	27.94 [1.100]	21.84 [.860]	32.00 [1.260]	27.94 [1.100]	17.78 [.700]	10	2–5102156–1
	BLACK	78.74 [3.100]	96.52 [3.800]	90.42 [3.560]	100.58 [3.960]	96.52 [3.800]	86.36 [3.400]	64	1–5102156–2
	BLACK	73.66 [2.900]	91.44 [3.600]	85.34 [3.360]	95.50 [3.760]	91.44 [3.600]	81.28 [3.200]	60	1–5102156–1
	BLACK	60.96 [2.400]	78.74 [3.100]	72.64 [2.860]	82.80 [3.260]	78.74 [3.100]	68.58 [2.700]	50	1–5102156–0
	BLACK	48.26 [1.900]	66.04 [2.600]	59.94 [2.360]	70.10 [2.760]	66.04 [2.600]	55.88 [2.200]	40	5102156–9
	BLACK	40.64 [1.600]	58.42 [2.300]	52.32 [2.060]	62.48 [2.460]	58.42 [2.300]	48.26 [1.900]	34	5102156–8
	BLACK	35.56 [1.400]	53.34 [2.100]	47.24 [1.860]	57.40 [2.260]	53.34 [2.100]	43.18 [1.700]	30	5102156–7
	BLACK	30.48 [1.200]	48.26 [1.900]	42.16 [1.660]	52.32 [2.060]	48.26 [1.900]	38.10 [1.500]	26	5102156–6
	BLACK	27.94 [1.100]	45.72 [1.800]	39.62 [1.560]	49.78 [1.960]	45.72 [1.800]	35.56 [1.400]	24	5102156–5
	BLACK	22.86 [.900]	40.64 [1.600]	34.54 [1.360]	44.70 [1.760]	40.64 [1.600]	30.48 [1.200]	20	5102156–4
	BLACK	17.78 [.700]	35.56 [1.400]	29.46 [1.160]	39.62 [1.560]	35.56 [1.400]	25.40 [1.000]	16	5102156–3
	BLACK	15.24 [.600]	33.02 [1.300]	26.92 [1.060]	37.08 [1.460]	33.02 [1.300]	22.86 [.900]	14	5102156–2
	BLACK	10.16 [.400]	27.94 [1.100]	21.84 [.860]	32.00 [1.260]	27.94 [1.100]	17.78 [.700]	10	5102156–1

THIS DRAWING IS A CONTROLLED DOCUMENT.

DIMENSIONS: INCHES

TOLERANCES UNLESS OTHERWISE SPECIFIED:
0 PLC ± –
1 PLC ± –
2 PLC ± 0.13[.005]
3 PLC ± –
4 PLC ± –
ANGLES ± –

MATERIAL 5 | FINISH 6

DWN 01–06–05 G. ATTADIA – DOCK5
CHK 01–06–05 S. BOLASH
APVD 01–06–05 M. WALMSLEY
PRODUCT SPEC –
APPLICATION SPEC –
WEIGHT –

TE Connectivity

NAME: HEADER ASSY, UNIVERSAL, AMP–LATCH –

SIZE	CAGE CODE	DRAWING NO	RESTRICTED TO
A1	00779	C–5102156	–

CUSTOMER DRAWING | SCALE 4:1 | SHEET 2 OF 2 | REV D1

Mouser Electronics

Authorized Distributor

Click to View Pricing, Inventory, Delivery & Lifecycle Information:

TE Connectivity:

2-5102156-8